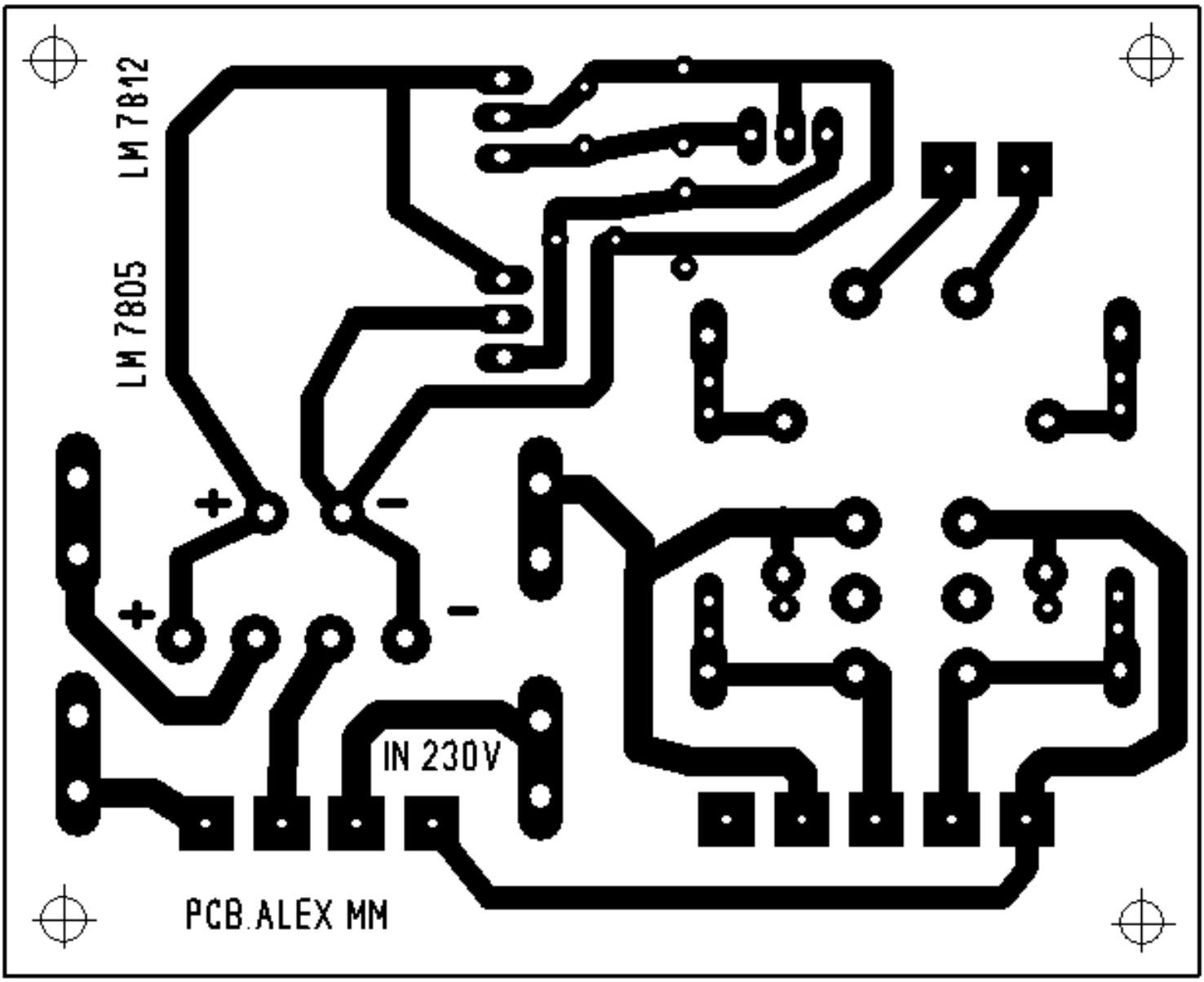
LM 7812
LM 7805
+
-
+
-
IN 230V
PCB.ALEX MM