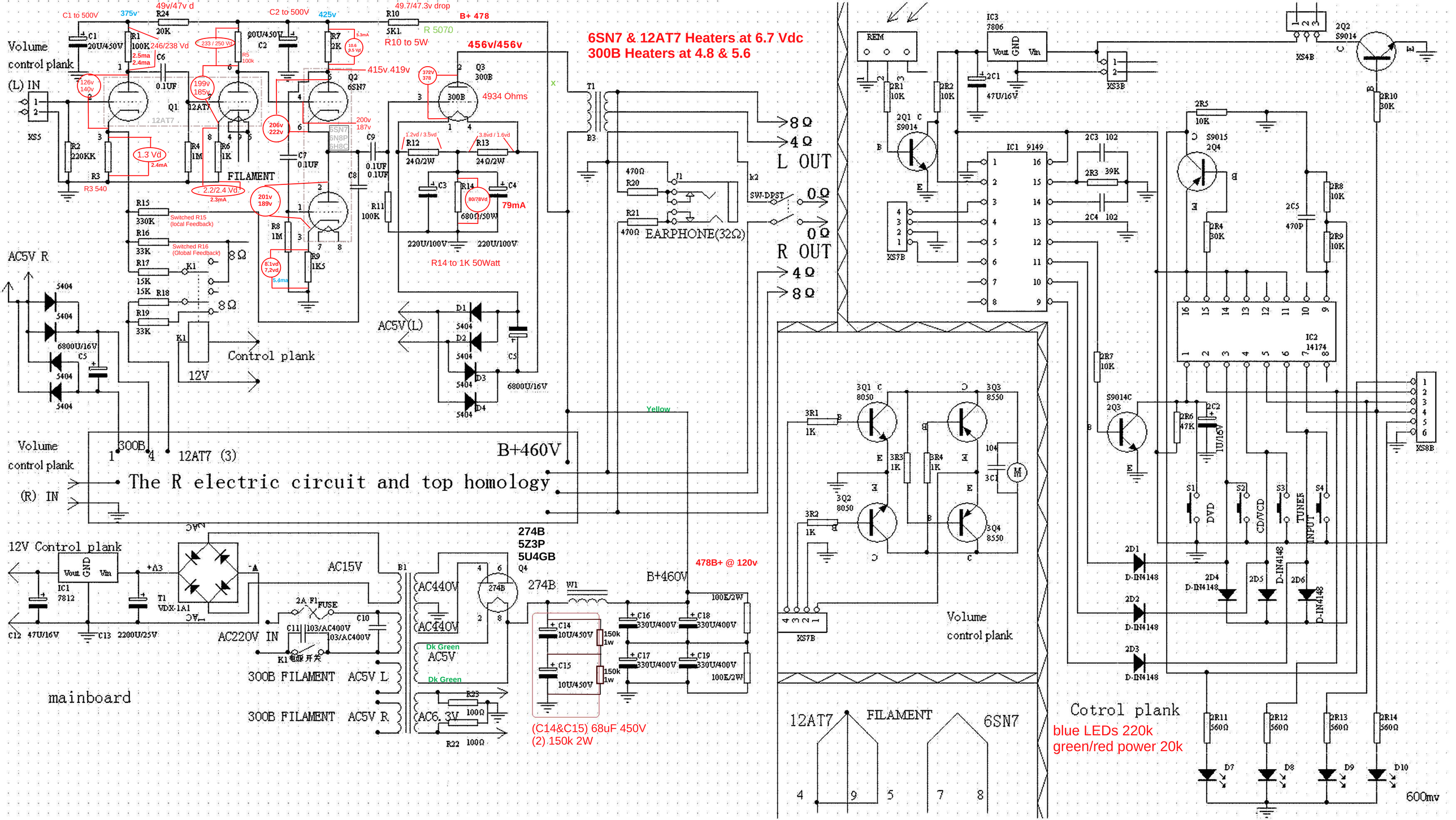
6SN7 & 12AT7 Heaters at 6.7 Vdc
300B Heaters at 4.8 & 5.6
Volume control plank
(L) IN
XS5
C1 to 500V
375v
49v/47v d
R24
20K
C2 to 500V
425v
49.7/47.3v drop
R10
5K1
R 5070
R10 to 5W
B+ 478
456v/456v
C1
20U/450V
R1
100K
246/238 Vd
2.5ma
2.4ma
C6
0.1UF
233 / 250 Vd
R5
100k
20U/450V
C2
R7
2K
5.3mA
10.6
9.5 Vd
415v 419v
Q1
12AT7
Q2
6SN7
Q3
300B
4934 Ohms
372V
378
126v
140v
199v
185v
206v
222v
200v
187v
R2
220KK
R3
R3 540
1.3 Vd
2.4mA
R4
1M
R6
1K
FILAMENT
2.2/2.4 Vd
2.3mA
C7
0.1UF
C8
C9
0.1UF
0.1UF
R12
24Ω/2W
R13
24Ω/2W
1.2vd / 3.5vd
3.8vd / 1.6vd
C3
R14
680Ω/50W
80/78Vd
79mA
C4
220U/100V
220U/100V
R14 to 1K 50Watt
R11
100K
R15
330K
Switched R15
(local Feedback)
R16
33K
Switched R16
(Global Feedback)
R17
15K
R18
15K
R19
33K
R8
1M
R9
1K5
8.1vd
7.2vd
5.4ma
AC5V R
5404
6800U/16V
C5
K1
Control plank
12V
AC5V(L)
D1
D2
D3
D4
6800U/16V
T1
B3
470Ω
R20
R21
470Ω
J1
EARPHONE(32Ω)
SW-DPST
8 Ω
4 Ω
L OUT
0 Ω
0 Ω
R OUT
4 Ω
8 Ω
Yellow
Volume control plank
(R) IN
300B
12AT7 (3)
B+460V
The R electric circuit and top homology
12V Control plank
IC1
7812
T1
VDX-1A1
C12
47U/16V
C13
2200U/25V
AC15V
AC220V IN
2A F1
FUSE
C10
C11
103/AC400V
103/AC400V
K1
300B FILAMENT
AC5V L
300B FILAMENT
AC5V R
mainboard
274B
5Z3P
5U4GB
Q4
274B
AC440V
AC440V
Dk Green
AC5V
Dk Green
AC6.3V
R23
100Ω
R22
100Ω
W1
B+460V
478B+ @ 120v
C14
10U/450V
C15
10U/450V
150k
1w
150k
1w
C16
330U/400V
C17
330U/400V
C18
330U/400V
C19
330U/400V
100K/2W
100K/2W
(C14&C15) 68uF 450V
(2) 150k 2W
REM
IC3
7806
Vout
GND
Vin
2R1
10K
2R2
10K
2C1
47U/16V
2Q1
S9014
XS7B
IC1 9149
2C3 102
2R3 39K
2C4 102
2R5
10K
S9015
2Q4
2R4
30K
2C5
470P
2R8
10K
2R9
10K
2R7
10K
IC2
14174
S9014C
2Q3
2R6
47K
2C2
1U/16V
3Q1
8050
3Q3
8550
3R1
1K
3R3
1K
3R4
1K
3Q2
8050
3Q4
8550
3R2
1K
3C1
104
M
XS7B
Volume control plank
12AT7
FILAMENT
6SN7
S1
S2
S3
S4
DVD
CD/VCD
TUNER
INPUT
2D1
2D2
2D3
2D4
2D5
2D6
D-IN4148
2R11
560Ω
2R12
560Ω
2R13
560Ω
2R14
560Ω
D7
D8
D9
D10
Cotrol plank
blue LEDs 220k
green/red power 20k
600mv
XS4B
2Q2
S9014
XS3B
2R10
30K
XS8B