WOLVERINE (son of badger) - TEAM BLUE

IPS in Isolation

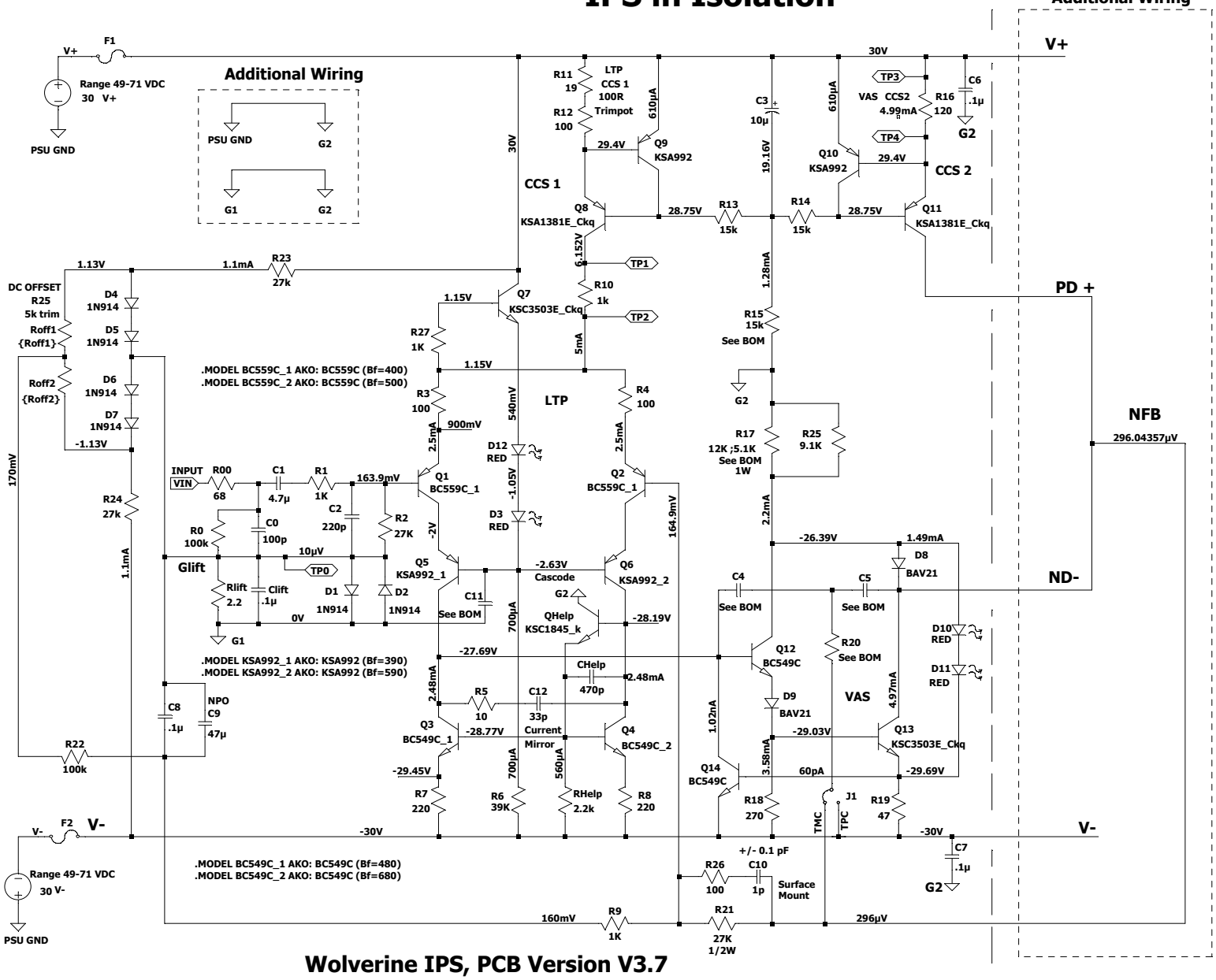

Wolverine IPS, PCB Version V3.7