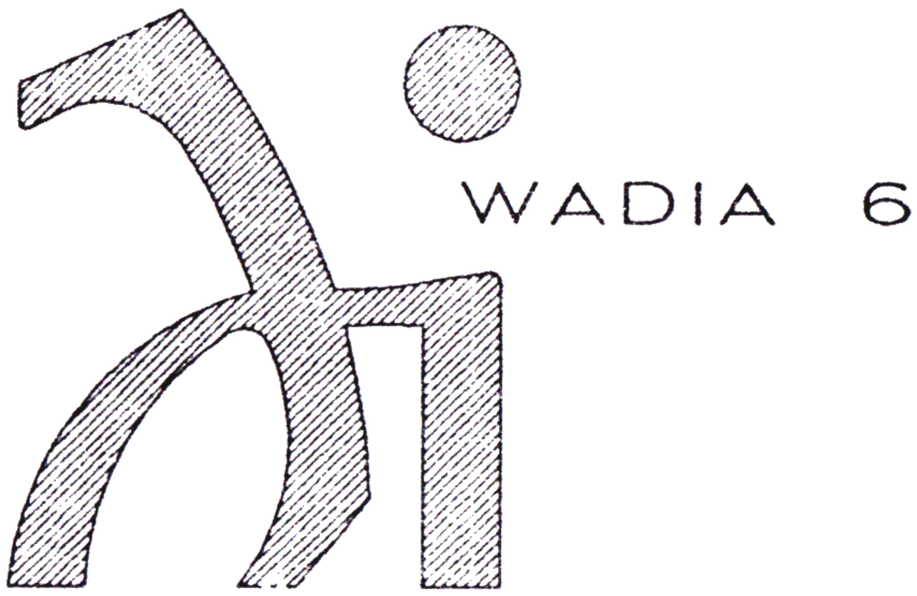

Wadia DIGITAL
CD PLAYER

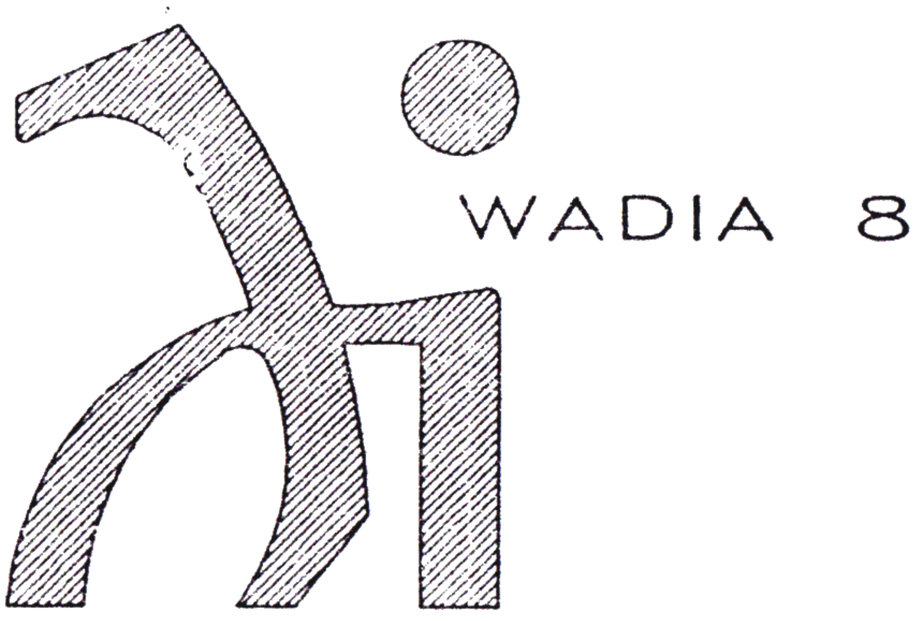

Wadia DIGITAL
CD TRANSPORT

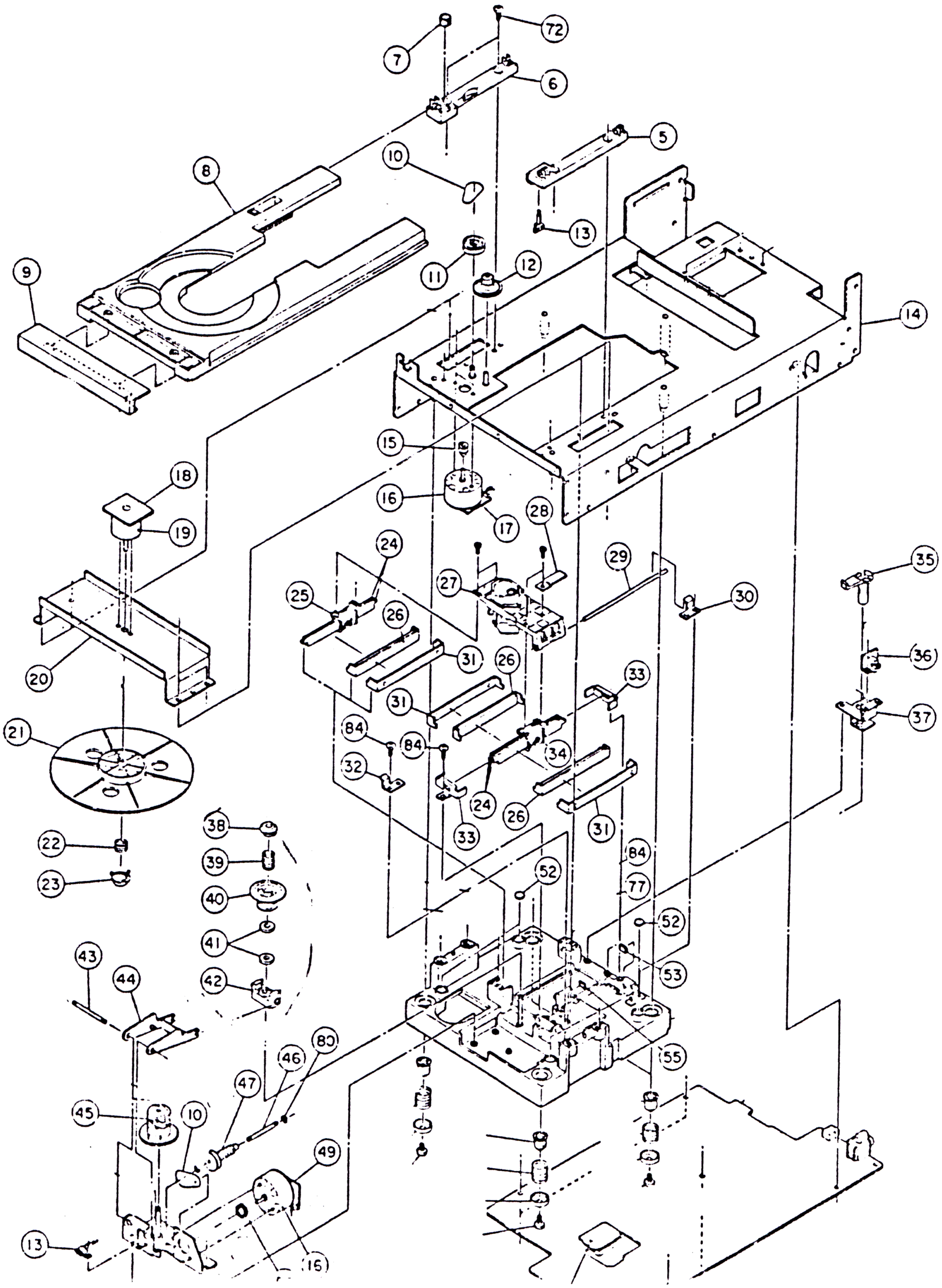
7
72
6
5
10
8
13
11
12
9
14
15
18
16
17
28
19
24
29
35
27
25
30
26
36
20
31
26
33
37
21
84
84
34
32
24
26
31
33
22
38
84
39
52
23
77
40
52
41
53
43
44
42
80
46
55
47
45
10
49
13
15

WADIA 6
SERVICE ACCESS

Main Board & Digital Output

Place unit on right side .
Remove (14) #4-40 Torx Flathead screws.
Remove Access Door .
NOTE: #4-40 Hex Flathead screws should not be removed. These screws hold the Mechanism mounting brackets and will not require removal for any service operation.

Access to Mechanical Section and Power Connector

* Unscrew (4) tiptoe feet from bottom Pads
* Remove (4) 10-32 screws 5" long from bottom Pads (with 5/32 allen wrench)
* Remove (4) bottom Pads
  Remove (4) top Pads
* Remove (4) 10-32 screws 4 3/4" long from side panel (with 5/32 allen wrench)
* Remove top cover

If access to DAC Section of WADIA 6 is required:

* Remove (3) Flathead #6-32 screws from LEFT Side at this time

To Remove Left Side Panel, SET UNIT IN NORMAL POSITION
A 12" long 5/64 ball hex is required for this removal and for reassembly. (use this tool for this purpose only)

* Remove (2) #6-32 flat head screws that hold FRONT PLATE to corner (5/64")
* Remove (2) #6-32 flat head screws that hold BACK PLATE to corner (5/64")
* Remove LEFT Side from Unit

If it is necessary to gain access to back of DAC BOARD:

* Loosen Latches inside 2XLR (balanced) connectors and remove XLR housings, (2) #4-40 screws X2 , from back panel
* Remove ribbon cable from connector at front of DAC BOARD (it is not necessary to unsolder wires at JP1 and JP2)
* Remote nuts that hold RCA connectors
* Pivot DAC BOARD out of unit as much as wires allow.

If more access is required unsolder wires at JP1 and JP2

* Pivot Board on Data and Clock Coax Cables.

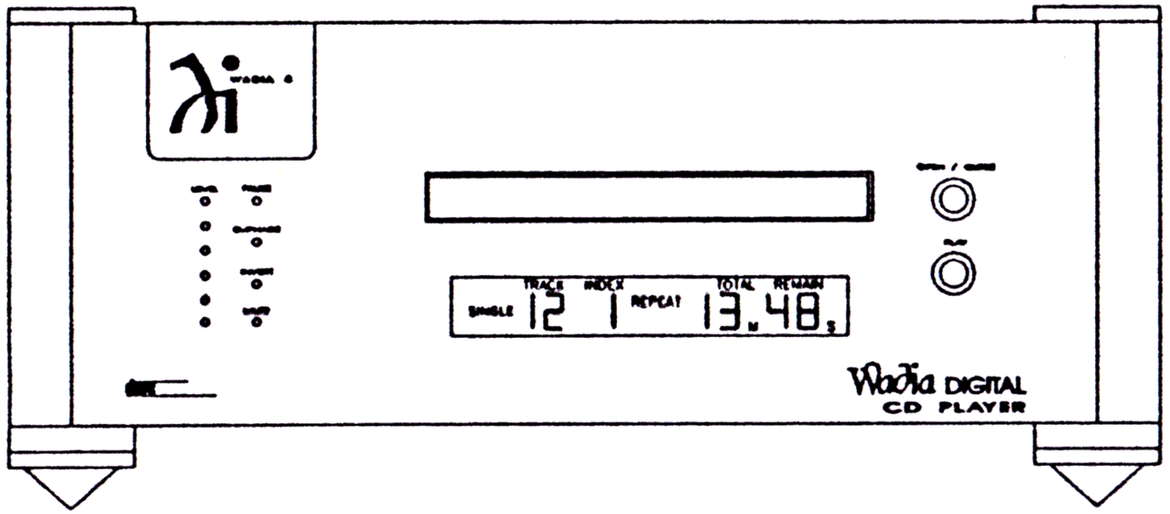
TRACK INDEX TOTAL REMAIN
SINGLE 12 1 REPEAT 13M48S
Wadia DIGITAL
CD PLAYER

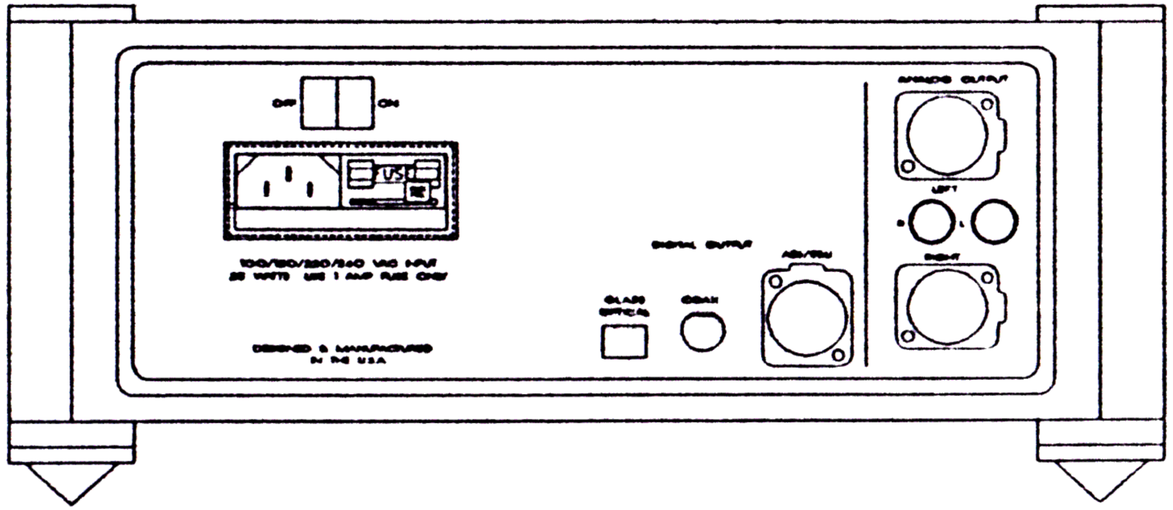
OFF ON
DIGITAL OUTPUT
GLASS OPTICAL
COAX
AES/EBU
LEFT
RIGHT

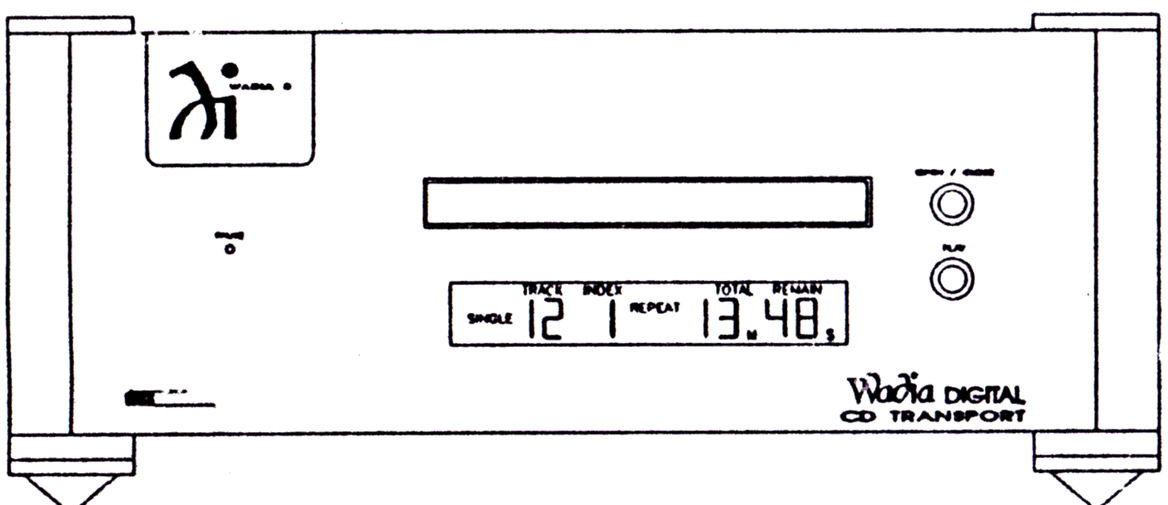
TRACK INDEX TOTAL REMAIN
SINGLE 12 1 REPEAT 13M48S
Wadia DIGITAL
CD TRANSPORT

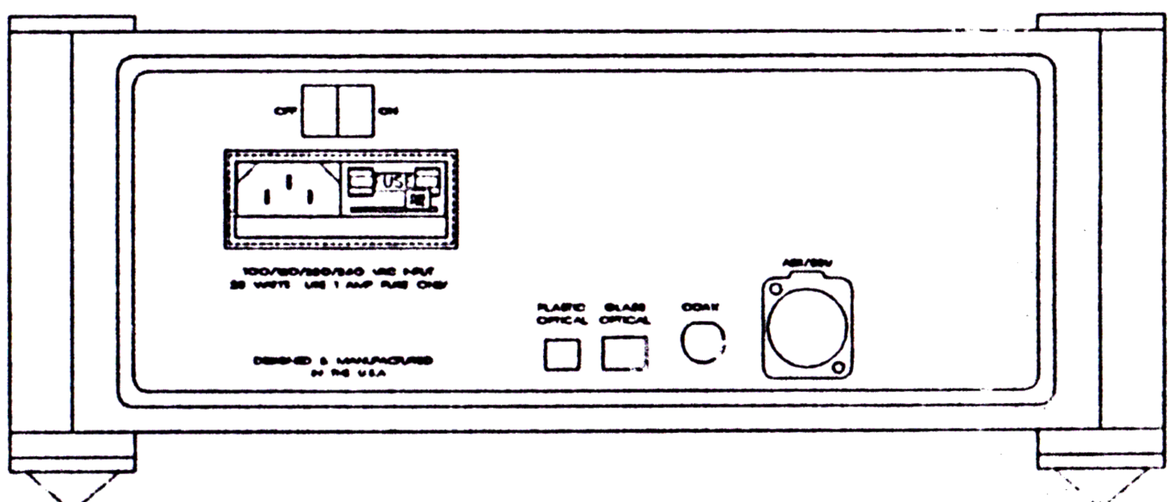
OFF ON
PLASTIC OPTICAL
GLASS OPTICAL
COAX
AES/EBU

113158-001 (WADIA 6, DIGITAL OUTPUT BD.)

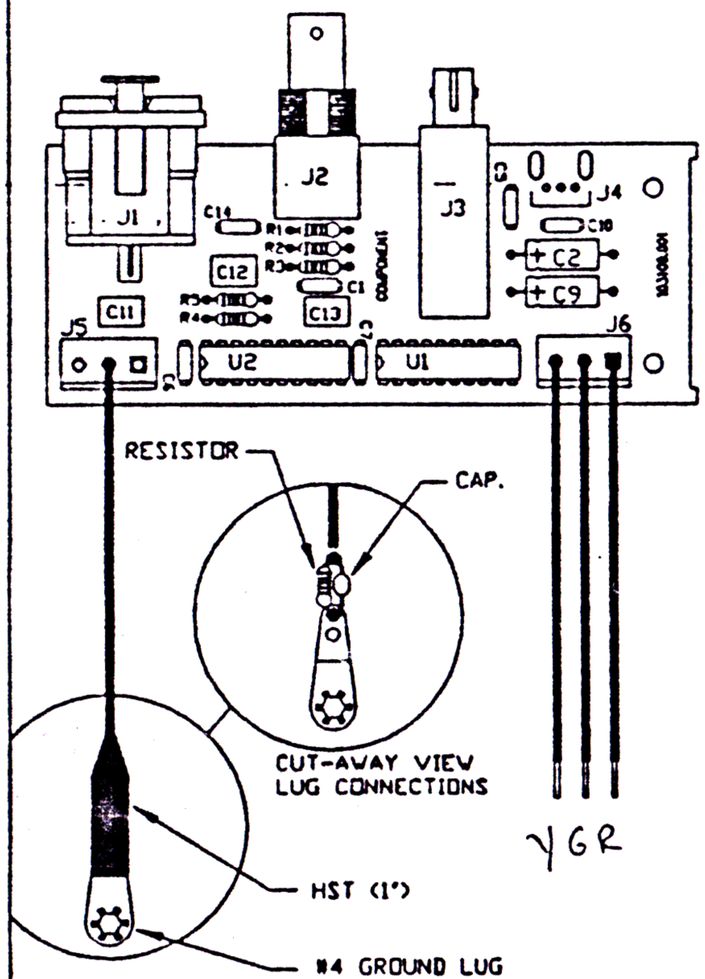

113158-002 (WADIA 8, DIGITAL OUTPUT BD.)

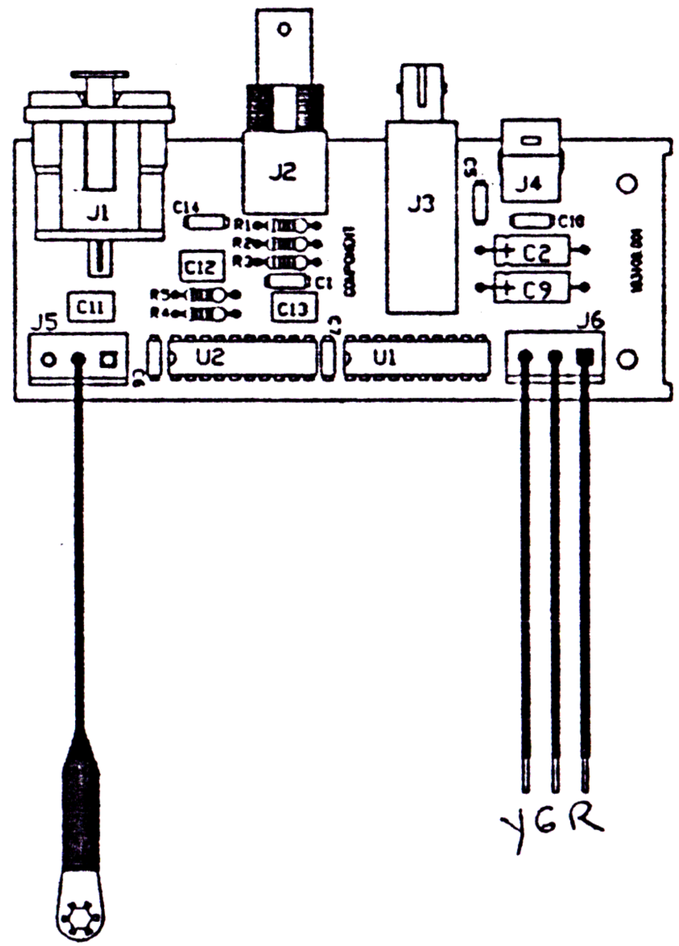

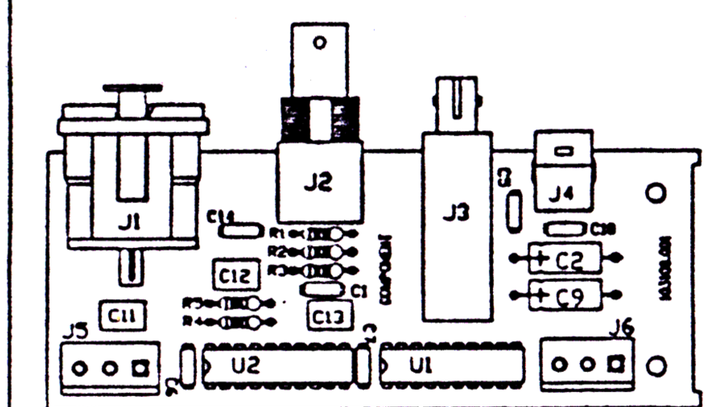

113158-003 (WADIA 7, DIGITAL OUTPUT BD.)

REVISION HISTORY TABLE

REV	DATE:	PCO#	CHANGES:
A	JUNE92	N/A	OFFICIAL RELEASE

NOTES:

1) MASK J5 AND J6 FOR HAND SOLDERING
2) MASK J4 WHEN NOT STUFFED.
3) 113158-001 & -002, J5 PIN 2 STUFFED AS PER BILL of MATERIALS (BoM). RESISTOR AND CAPACITOR IN PARALLEL AS PER DRAWING.
4) J6 PIN OUT (QUANTITY AS PER BoM) (SQUARE PAD) PIN 1 = RED WIRE
   PIN 2 = GREEN WIRE
   PIN 3 = YELLOW WIRE

Wadia DIGITAL CORP.
624 TROY STREET RIVER FALLS, WISCONSIN 54022
PHONE: (715) 426-5900 FAX: (715) 426-5885

TITLE: DIGITAL OUTPUT BOARD ASSEMBLIES

DRAWN BY: MAG	PROJECT MGR: DM	TOLERANCE: N/A	
DATE: 02-12-92	DRAWING#: 113158-A.DWG	SCALE: FIT	REV A
CHKD:	PART NUMBER: 113158-000	SIZE: A	
JUNE 24, 1992		SHEET 1 of 1	

PLCC Through-Hole Socket Pin-Outs

44-Pin

Top View

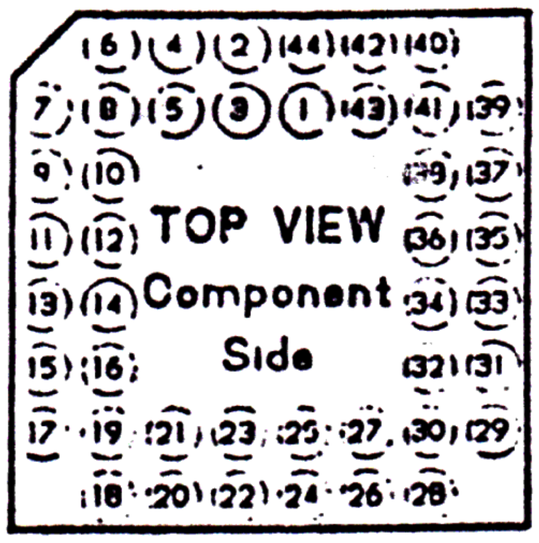

Bottom View

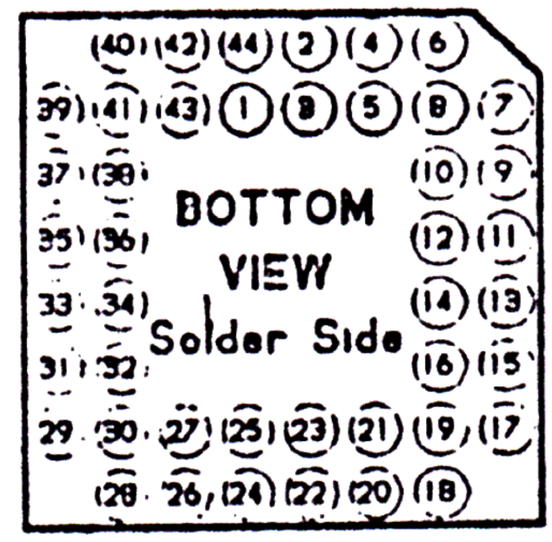

68-Pin

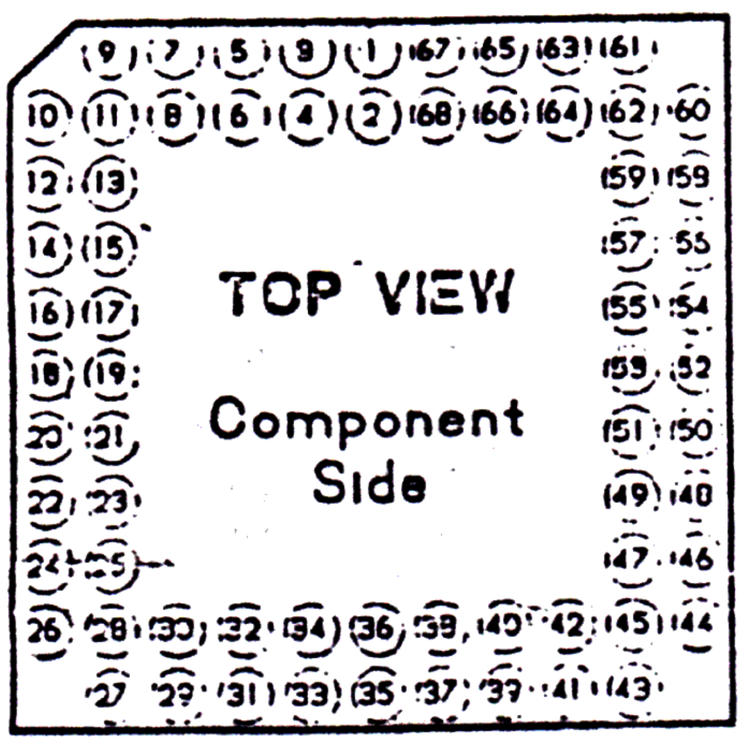

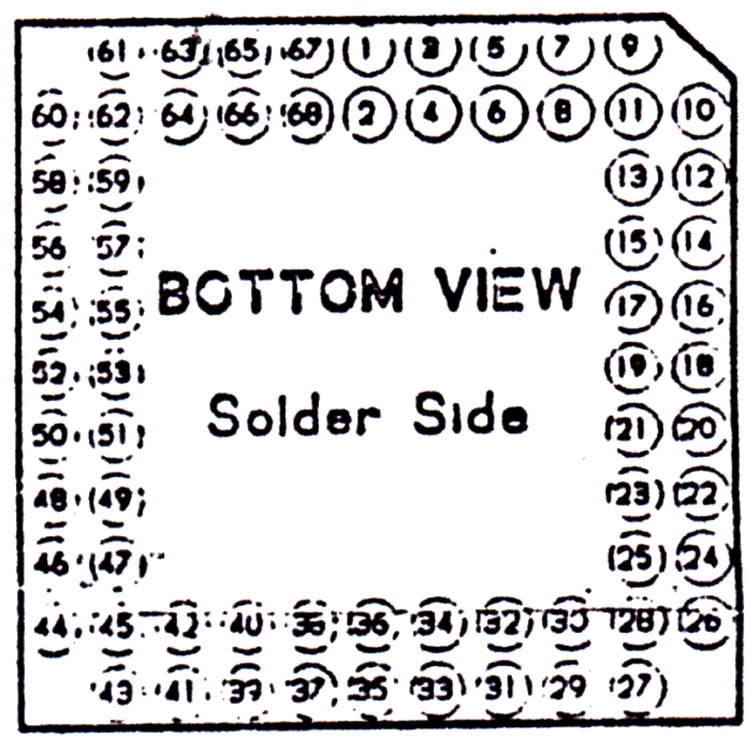

84-Pin

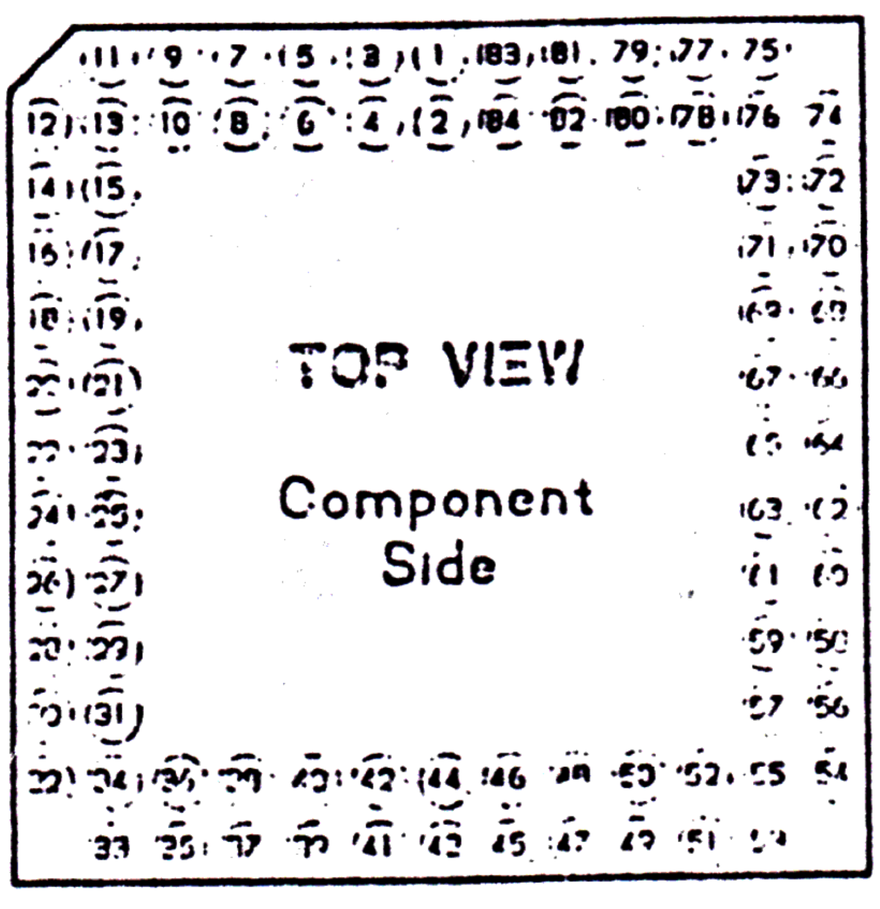

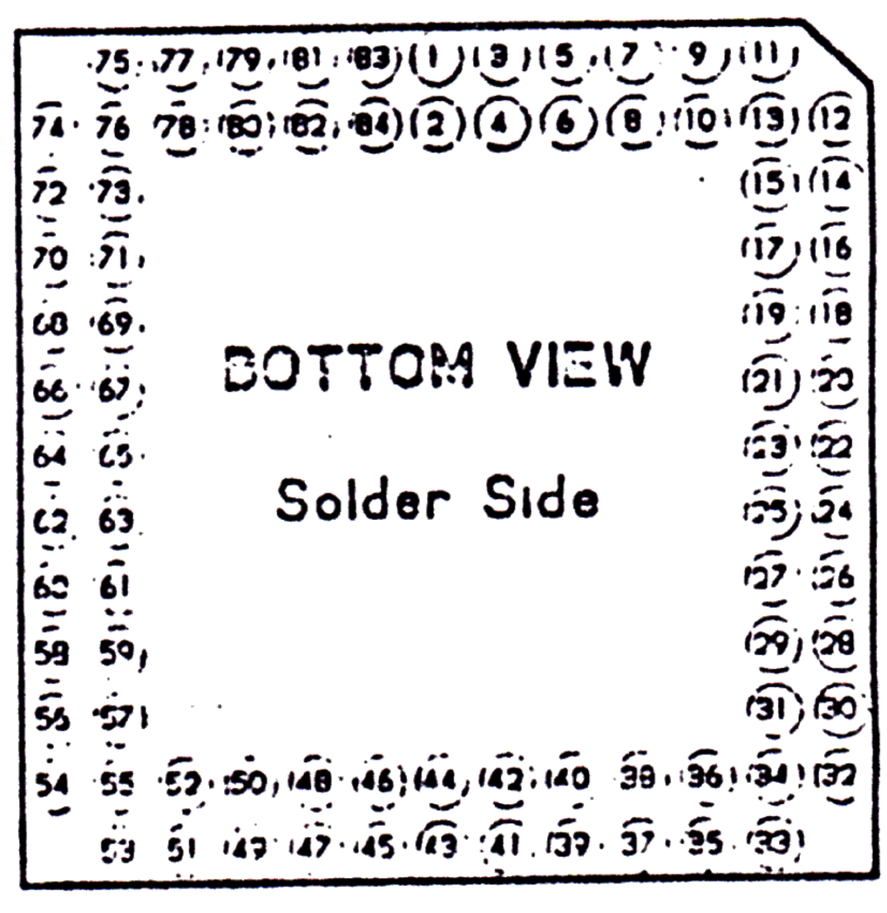

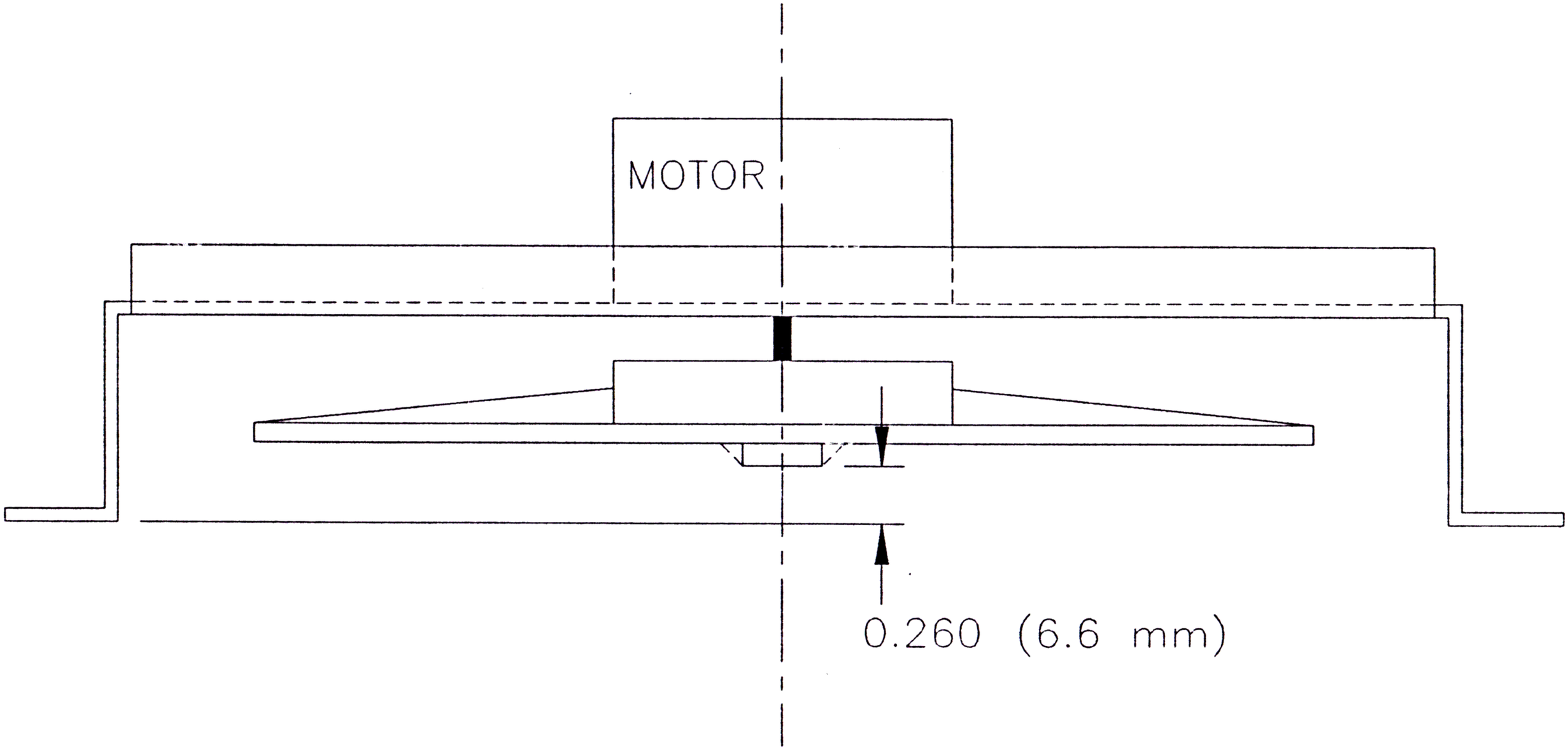

WADIA 6 & 8 PLATTER HEIGHT

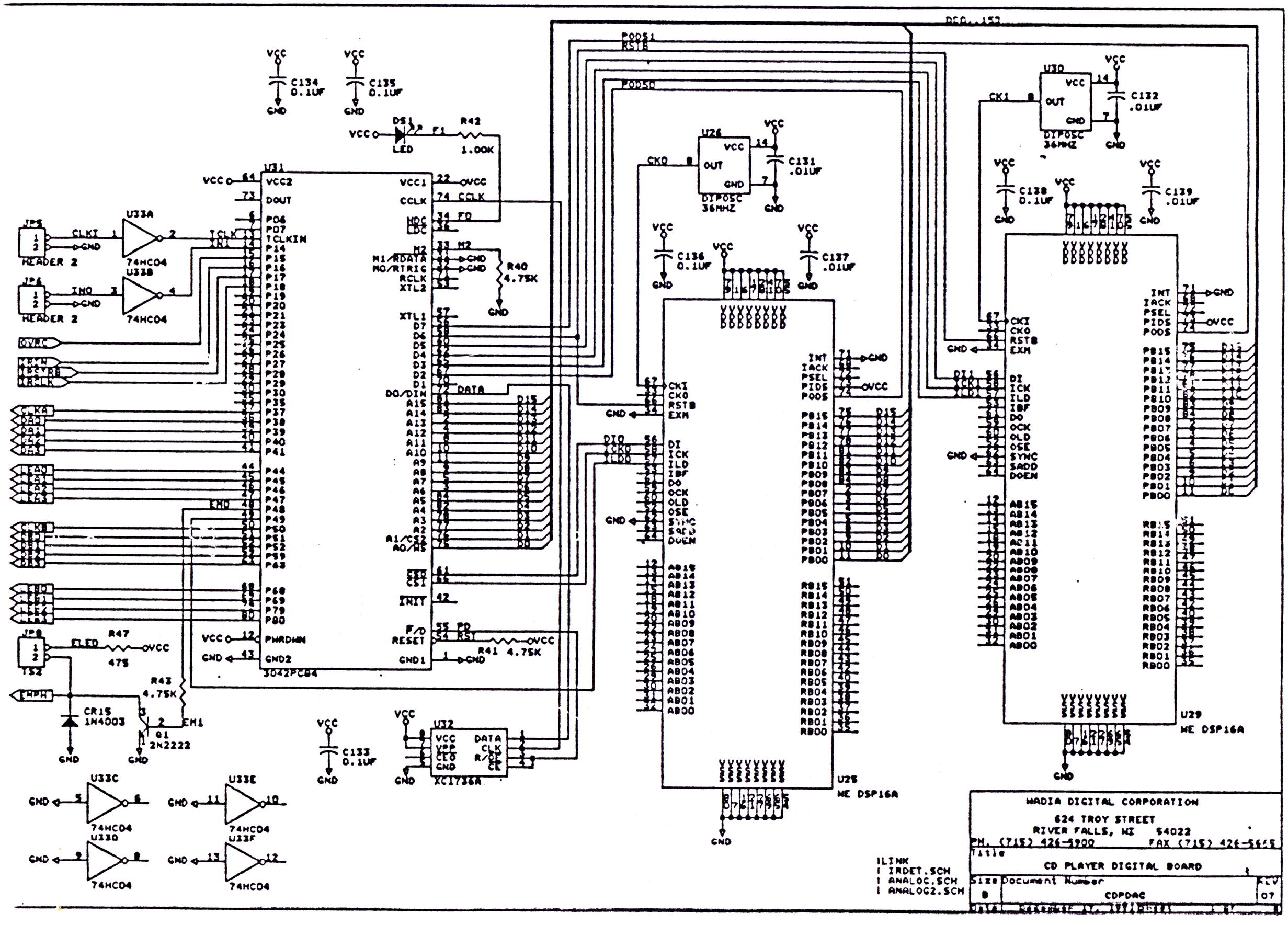
U31
3042PCB4
U32
XC1736A
U26
U30
U29
U28
ME DSP16A
DIPOSC 36MHZ
74HC04
HEADER 2
LED
R42 1.00K
R40 4.75K
R41 4.75K
R43 4.75K
R47 47S
CR15 1N4003
Q1 2N2222
C134 0.1UF
C135 0.1UF
C133 0.1UF
C131 .01UF
C132 .01UF
C136 0.1UF
C137 .01UF
C138 0.1UF
C139 .01UF
DFO..15?
PODS1
PODS0
RSTB
DATA
ILINK
IRDET.SCH
ANALOG.SCH
ANALOG2.SCH
WADIA DIGITAL CORPORATION
624 TROY STREET
RIVER FALLS, WI 54022
PH. (715) 426-5900 FAX (715) 426-5655
Title
CD PLAYER DIGITAL BOARD
Size B
Document Number
CDPDAC
REV 07

COMPANY: WADIA DIGITAL
TP/N: 1522-CP350A-M CP/N: 500083-001

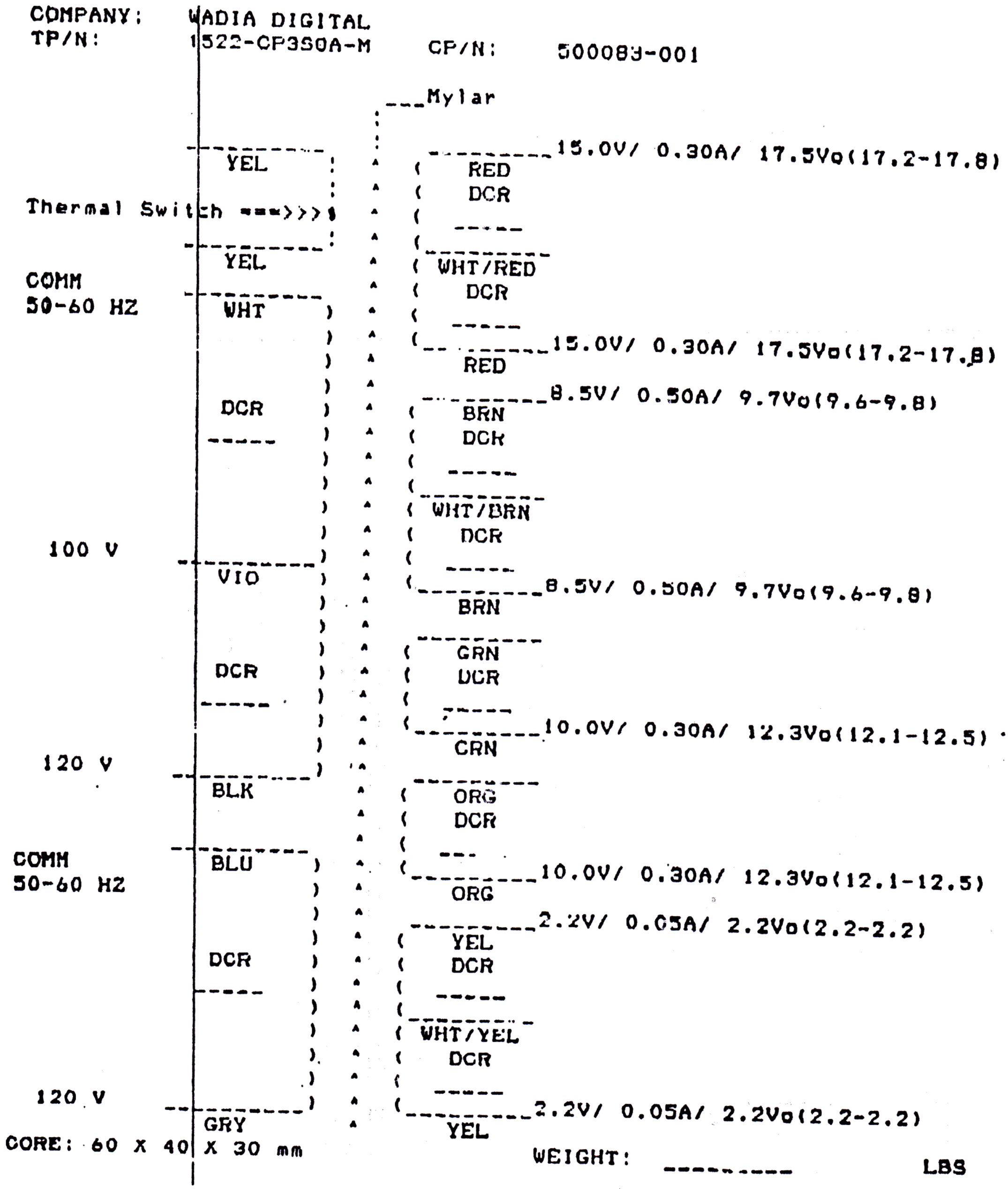

CORE: 60 X 40 X 30 mm

WEIGHT: _____ LBS

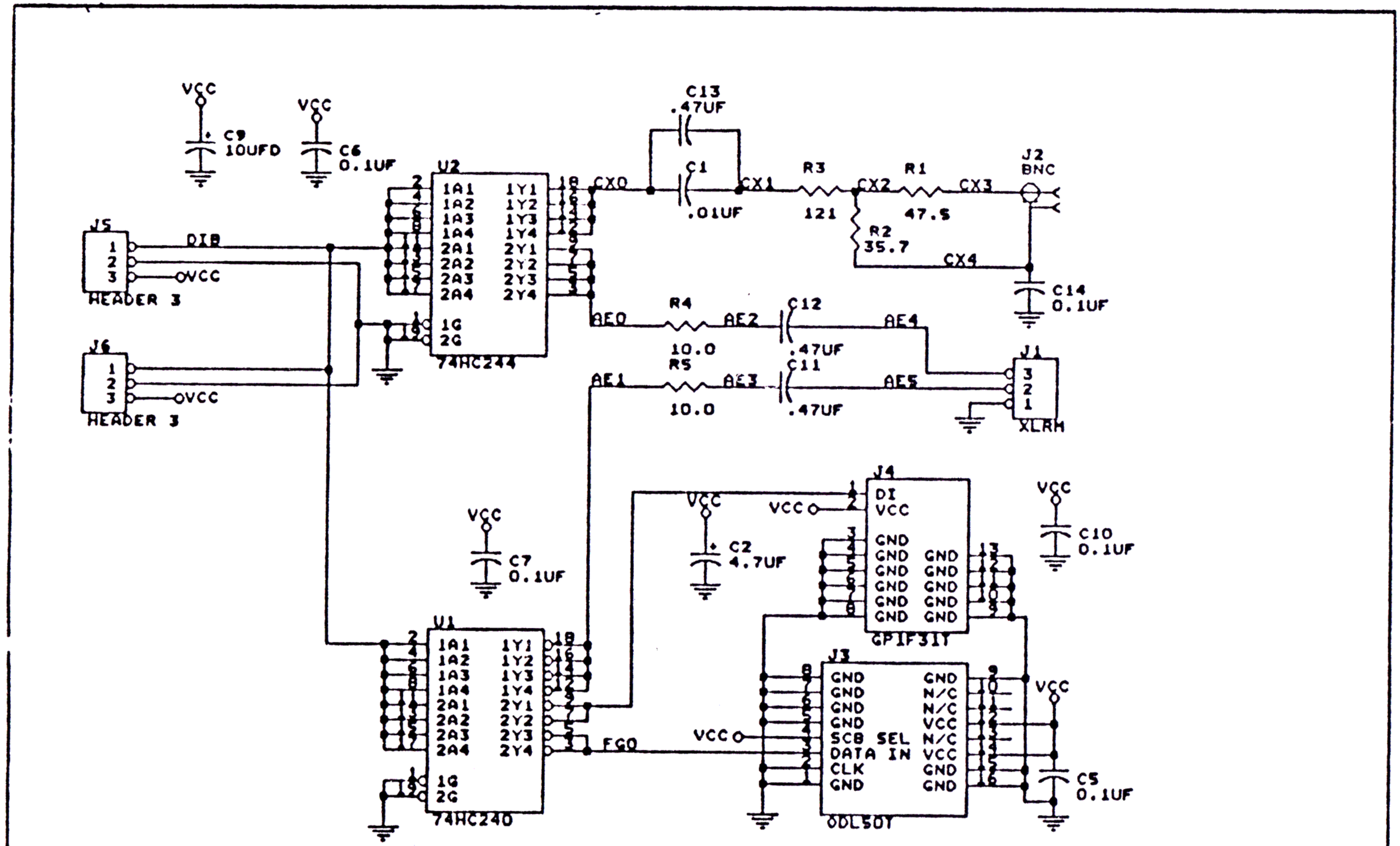

WADIA DIGITAL CORPORATION

624 TROY ST
RIVER FALLS WI 54022
PH (715)426-5900
FAX (715)426-5665

Title
CD PLAYER DIGITAL OUTPUT BOARD

Size	Document Number	REV
A	DIGOUT	03

Date: December 17, 1991 Sheet 1 of 1

1. Resistor values are in ohms (k=kilo-ohms, M=megohms).
2. Capacitor values are in microfarads (p=picofarads).
3. △ Parts marked with this sign are safety critical components. They must always be replaced with identical components-refer to the appropriate parts list and ensure exact replacement.

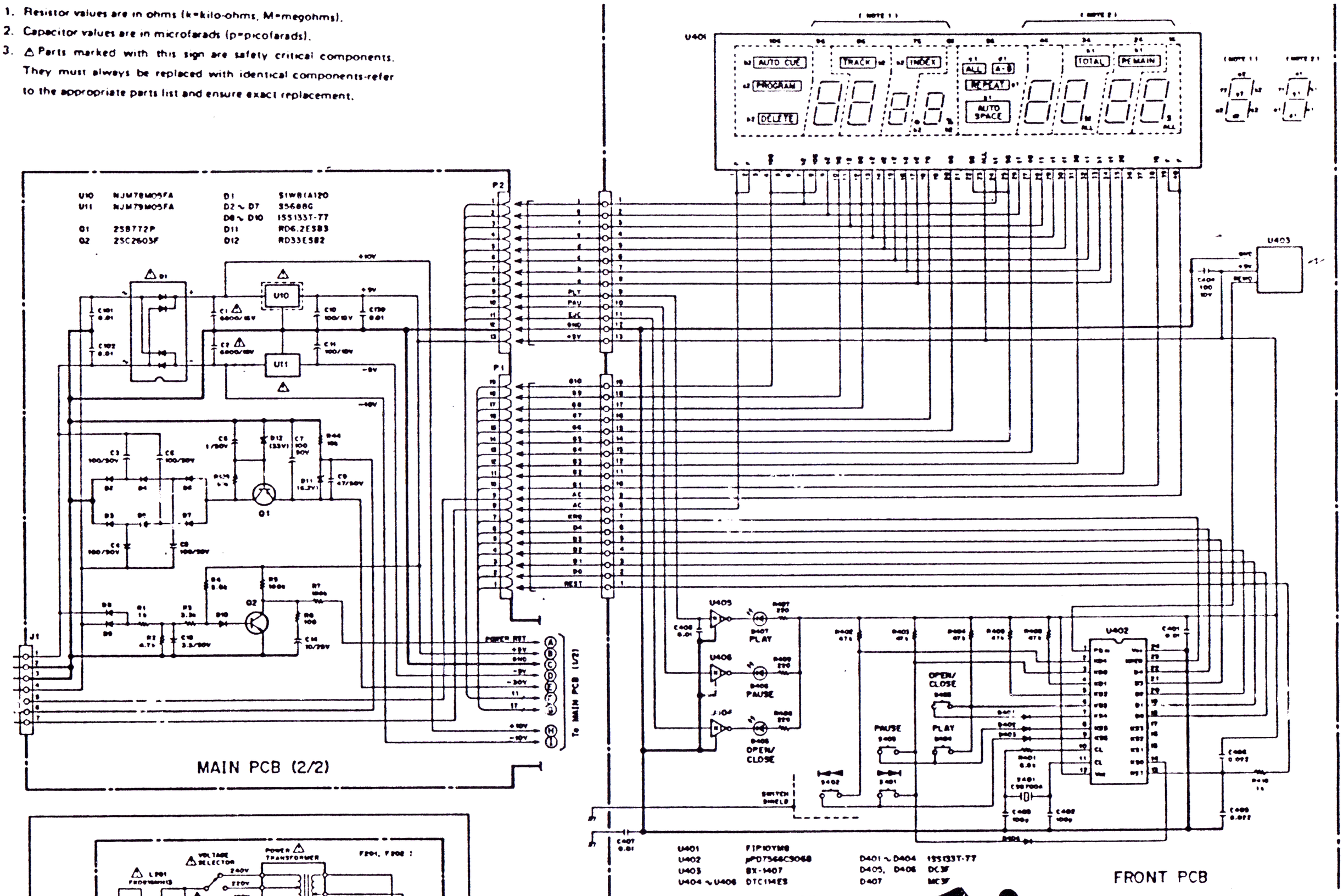

SOLDER SIDE

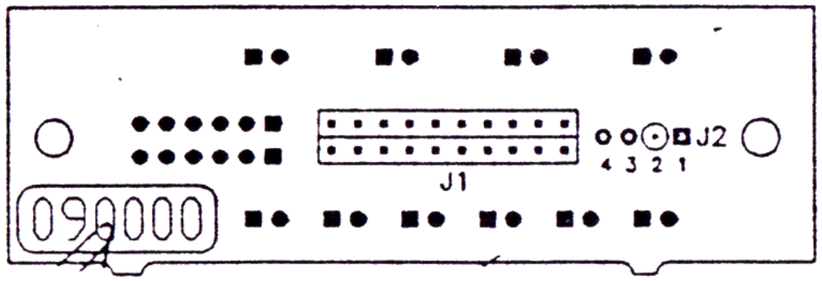

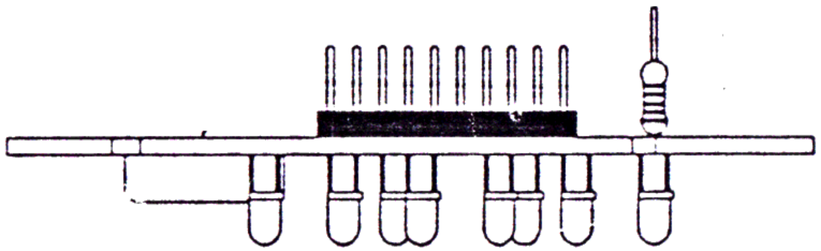

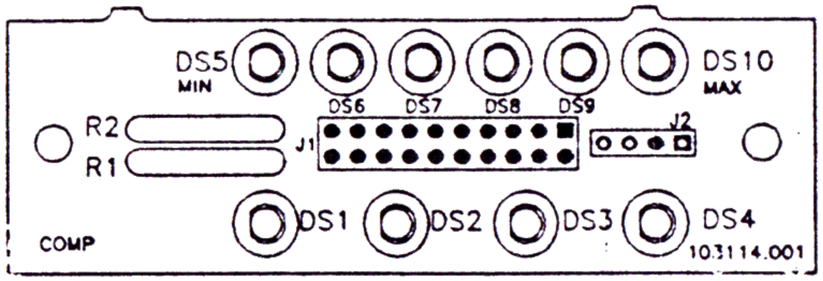

COMPONENT SIDE

Wadia DIGITAL CORP.

624 TROY STREET RIVER FALLS, WISCONSIN 54022
PHONE: (715) 426-5900 FAX: (715) 426-5665

TITLE: WADIA 6 VOLUME DISPLAY BOARD ASS'Y			
DRAWN BY: MAG	PROJECT MGR: JLW	TOLERANCE: N/A	
DATE: 3-24-92	DRAWING#: 113176-A.DWG	SCALE: 1=1	REV
CHKD:	PART NUMBER:	SIZE: A	A
JUNE 11, 1992	113176-001	SHEET 1 of 1	

5	*5801203000	GUIDE (R)
6	*5801203100	GUIDE (L)
7	*5801132601	CUSHION
8	*5801203601	TRAY
9	*106137-001	PANEL, TRAY
10	5800979500	BELT, LOADING
11	5800979400	GEAR (B)
12	5800979300	GEAR (A)
13	5301754000	SWITCH, DRAWER STATUS
14		MAIN CHASSIS ASSY
15	5800979200	PULLEY, MOTOR
16	5370009200	MOTOR, DC RF-500TB
17	*5200286400	T-MOTOR PCB ASSY
18	*5200275600	MOTOR OCB ASSY
19	5370008800	MOTOR, DC RF-310T
20	*5801202902	BRACKET, MOTOR
21	5801202800	TURNTABLE
22	5801202400	SPRING
23	5801201400	RING (B), CENTER
24	*5801059400	YORK (C)
25	5801078300	COIL (S)
26	*5801178900	YORK (B) ASSY
27	5347009800	LASER PICKUP ASSY
28	*5801164700	SHUTTER
29	*5801058900	SHAFT, GUIDE
30	*5801059100	HOLDER (R), SHAFT
31	*5801059200	YORK (A)
32	*5801059000	HOLDER (F), SHAFT
33	*5801059600	HOLDER, YORK
34	5801078200	COIL (D)
35	*5801164901	ARM, PICKUP LOCK
36	*5200275500	SENSER PCB ASSY
37	*5801164800	BRACKET, LOCK ARM
38	*5801201300	RING (A), CENTER
39	*5801096200	SPRING (G), PRESSURE
40	*5801201202	CLAMPER
41	5730033400	MAGNET REC-26A
42	*5801201100	HOLDER
43	5801201800	SHAFT (B)
44	*5801201500	ARM, LIFT
45	*5801202700	CAM, SHIRINDER
46	*5801201700	SHAFT (A)
47	*5800669800	WORM ASSY
48	VACANT	
49	*5200286500	C-MOTOR PCB ASSY
50	5801170200	PULLEY, MOTOR
51	*5801201600	BASE, CLAMPER
52	*5801095900	WASHER, RUBBER
53	*5801288300	STOPPER (B)
54		BASE, MECHANISM
55	*5801288200	STOPPER (A)

WADIA 6

Wadia DIGITAL CD PLAYER

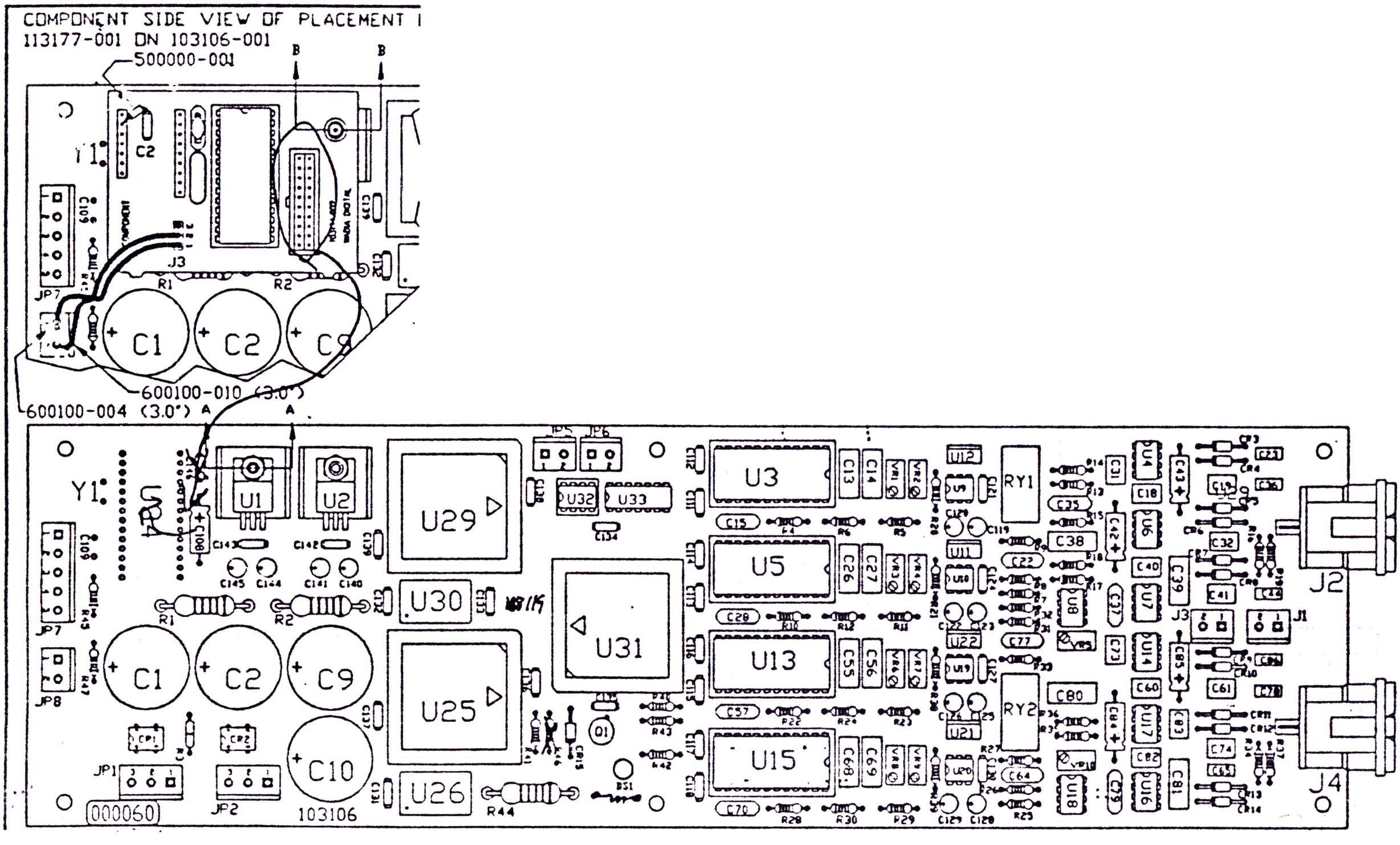

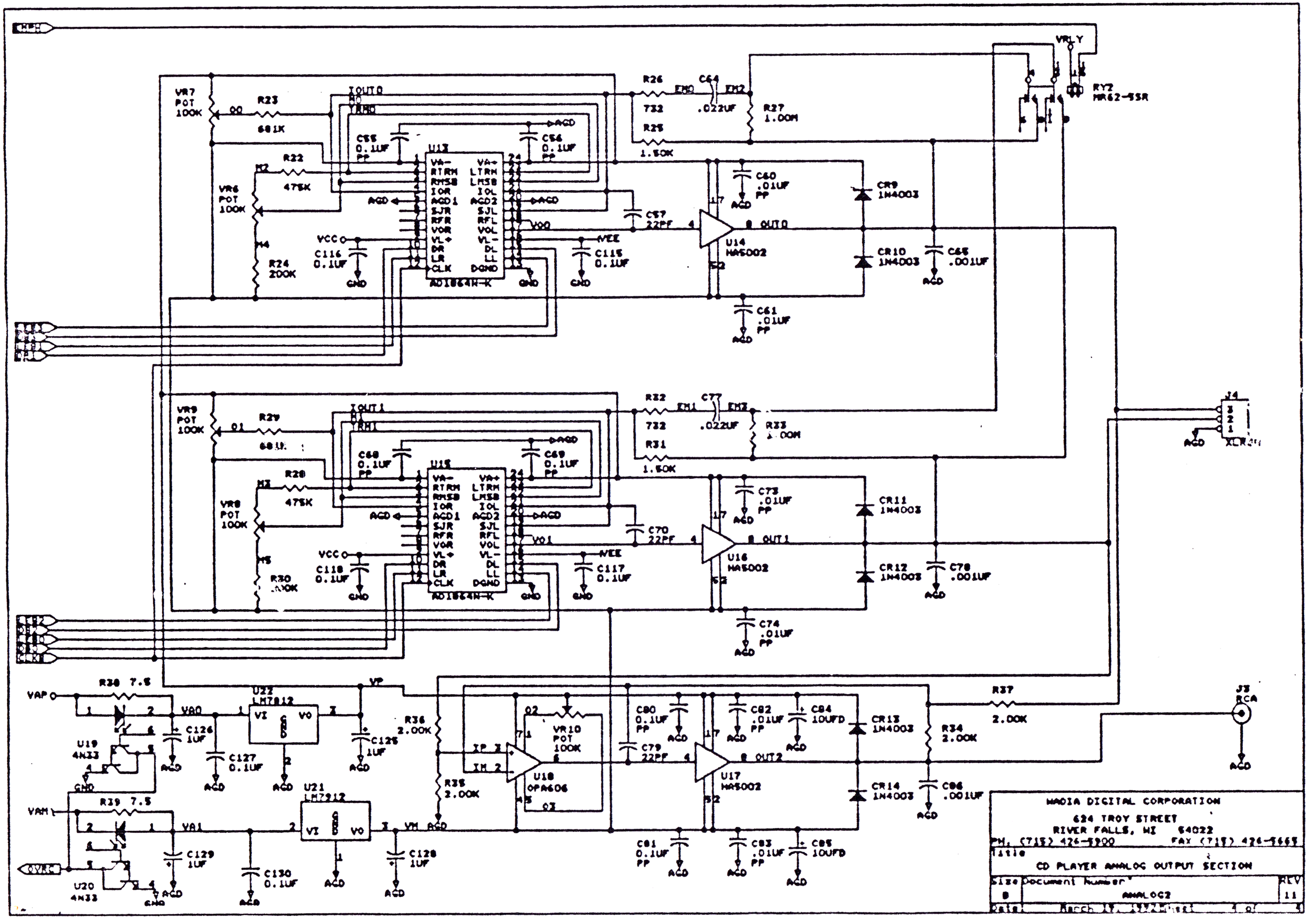
VR7 POT 100K
R23 681K
R22 475K
VR6 POT 100K
R24 200K
IOUT0
U13 AD1864N-K
C55 0.1UF PP
C56 0.1UF PP
C116 0.1UF
C115 0.1UF
R26 732
R25 1.50K
C64 .022UF
R27 1.00M
C60 .01UF PP
C57 22PF
U14 HA5002
CR9 1N4003
CR10 1N4003
C65 .001UF
C61 .01UF PP
RY2 MR62-5SR
VR9 POT 100K
R29 681K
R28 475K
VR8 POT 100K
R30 200K
IOUT1
U15 AD1864N-K
C68 0.1UF PP
C69 0.1UF PP
C118 0.1UF
C117 0.1UF
R32 732
R31 1.50K
C77 .022UF
R33 1.00M
C73 .01UF PP
C70 22PF
U16 HA5002
CR11 1N4003
CR12 1N4003
C78 .001UF
C74 .01UF PP
J4 XLR
R38 7.5
U19 4N33
U22 LM7812
C126 1UF
C127 0.1UF
C125 1UF
R36 2.00K
R35 2.00K
U18 OPA606
VR10 POT 100K
C80 0.1UF PP
C79 22PF
C82 .01UF PP
C84 10UFD
U17 HA5002
CR13 1N4003
CR14 1N4003
C86 .001UF
R37 2.00K
R34 2.00K
J3 RCA
R39 7.5
U20 4N33
U21 LM7912
C129 1UF
C130 0.1UF
C128 1UF
C81 0.1UF PP
C83 .01UF PP
C85 10UFD
WADIA DIGITAL CORPORATION
624 TROY STREET
RIVER FALLS, WI 54022
PH. (715) 426-9900 FAX (715) 426-9665
Title
CD PLAYER ANALOG OUTPUT SECTION
Size B
Document Number ANALOG2
REV 11
Date: March 17, 1992 Sheet 4 of 4

AC INPUT CONNECTOR (CORCOM)
VOLTAGE ADJUSTMENT

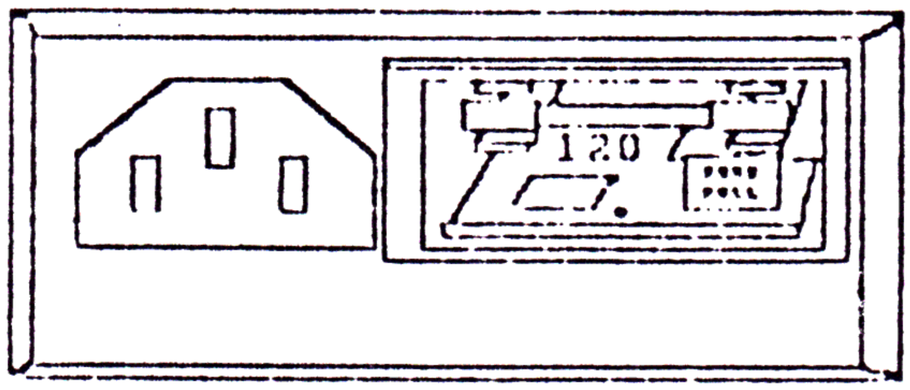

Fig. 1

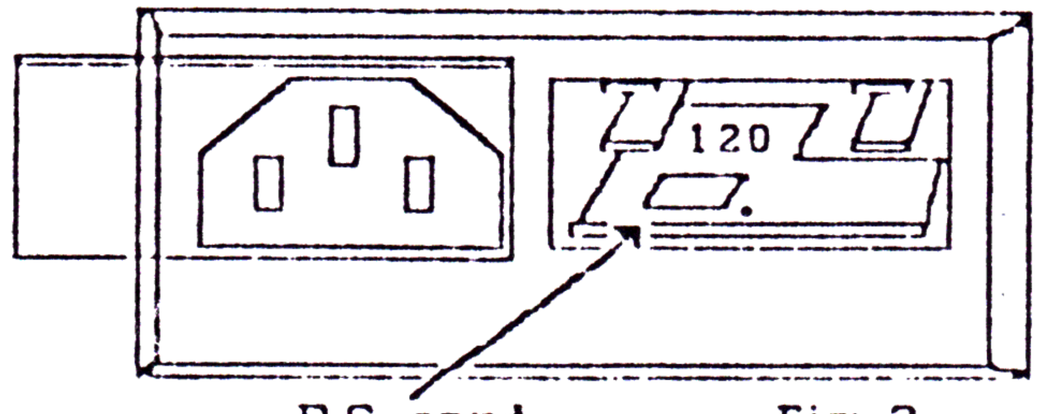

P.C. card

Fig. 2

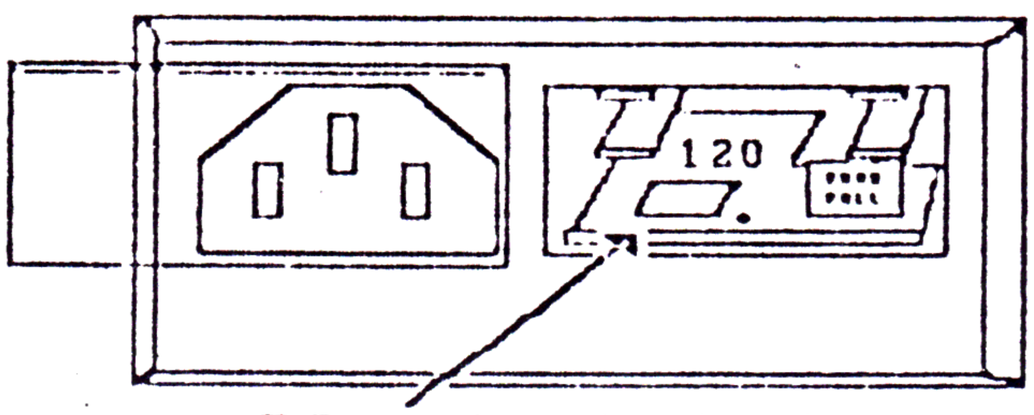

P.C. card set for 120V

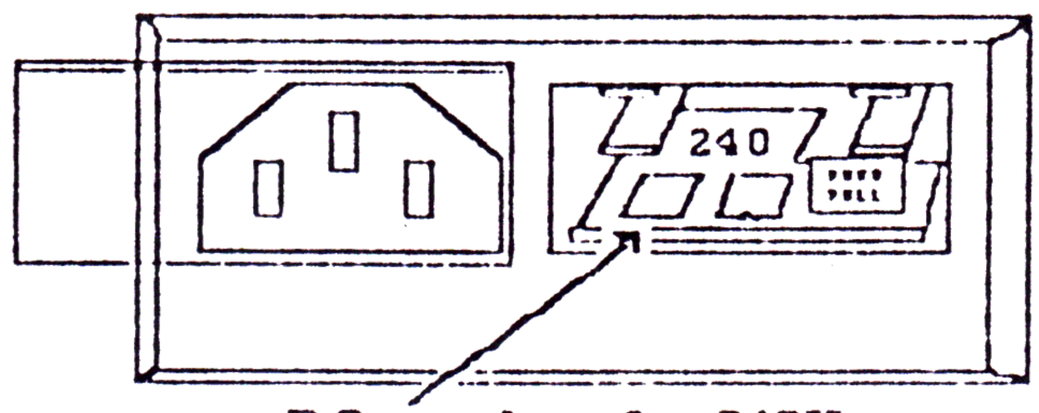

P.C. card set for 240V

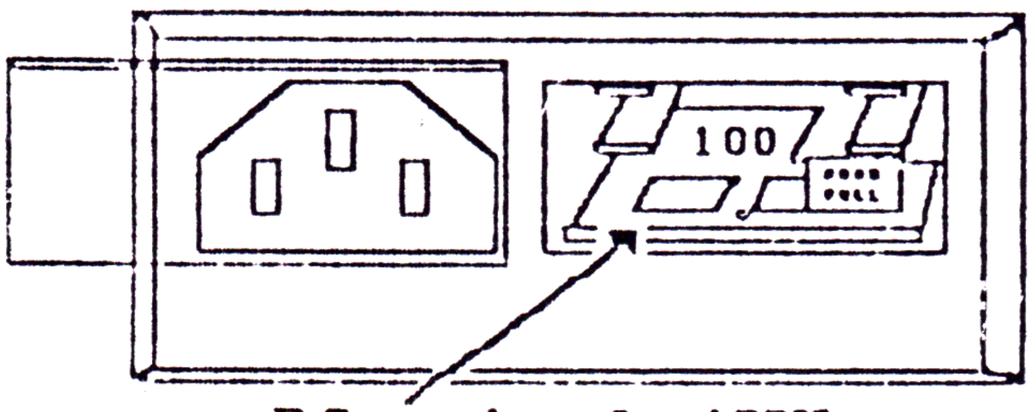

P.C. card set for 100V

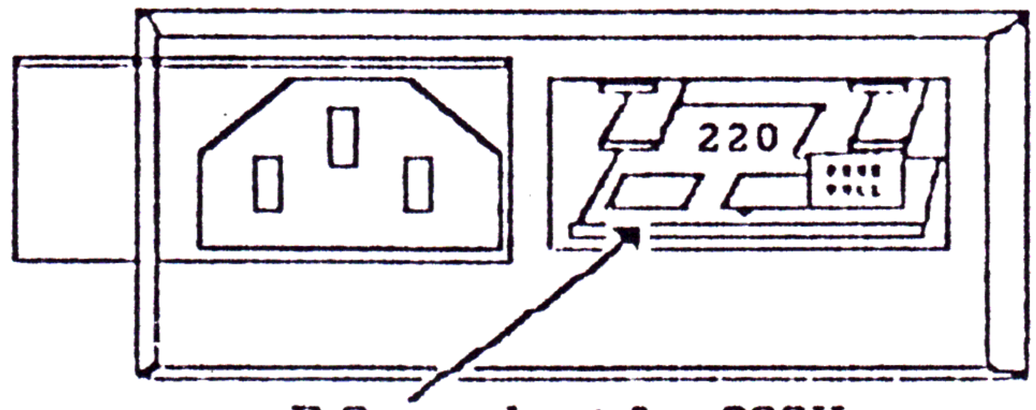

P.C. card set for 220V

* Slide the plastic cover over and remove the fuse as shown in figure 2.

* If the number exposed on the P.C. card is not the proper voltage then use a needlenose pliers to remove the card.

* Turn the card 180 degrees and/or flip it over to obtain the proper number.

* Install the card and make sure the proper number is exposed.