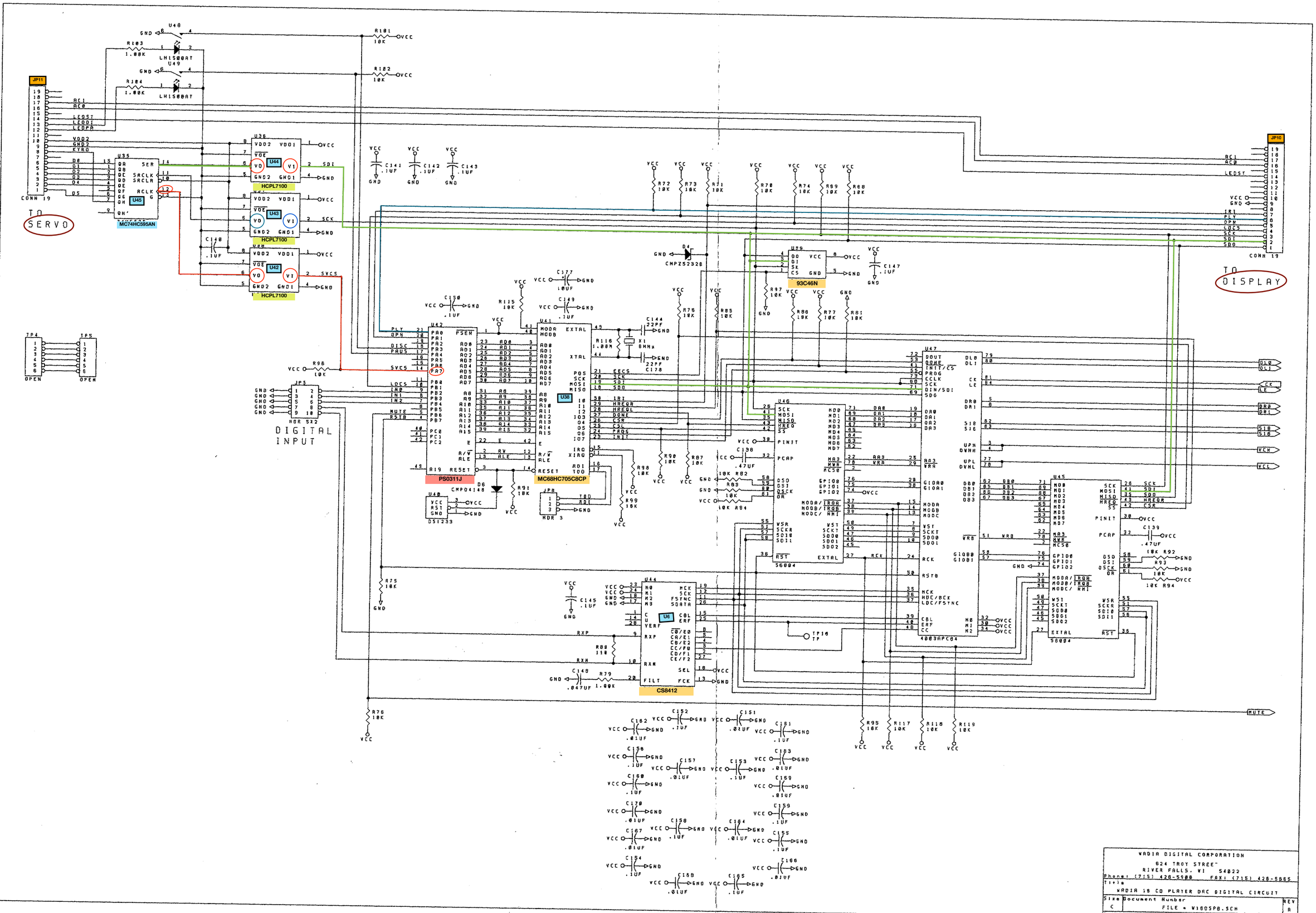

WADIA DIGITAL CORPORATION
624 TROY STREET
RIVER FALLS, WI 54022
Phone: (715) 426-5900 FAX: (715) 426-5865

Title: WADIA 18 CD PLAYER DAC DIGITAL CIRCUIT

Size	Document Number	REV
C	FILE = W18DSPB.SCH	A