The home of the turntable

THE VINYL ENGINE®

For more turntable manuals and setup information
please visit www.vinylengine.com

SERVICE MANUAL

YP-D71

DIRECT DRIVE
AUTO STOP QUARTZ LOCKED

SINCE 1887 YAMAHA
NIPPON GAKKI CO., LTD. HAMAMATSU, JAPAN

004385

Printed in Japan '79 APR. 2.32K

■CONTENTS

■PACKAGE INSTRUCTION 2
■DISASSEMBLY PROCEDURES 3
■SPECIFICATIONS 5
■ADJUSTMENTS 6
■CIRCUIT BOARDS/WIRING 7
■SCHEMATIC DIAGRAM 8
■BLOCK DIAGRAM 9

■PACKAGE INSTRUCTION

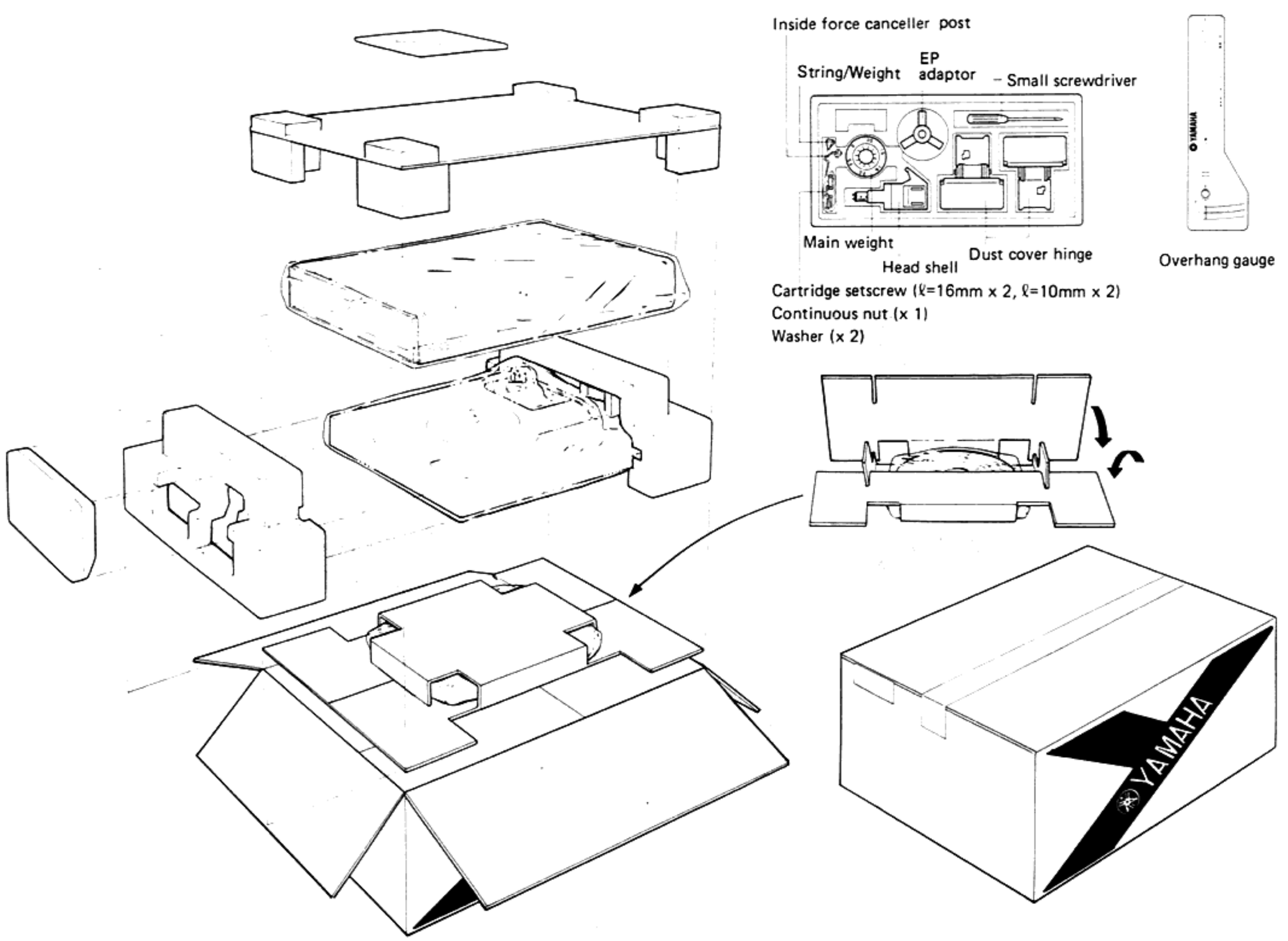

■DISASSEMBLY PROCEDURES

This DISASSEMBLY PROCEDURES are applicable to U.S.A. and Canadian models.

Before disassembling the unit, remove the platter and rubber mat, and securely tie the arm to the arm rest with string, etc. Then, gently turn the unit upside-down and place it on books, etc., piled up on both sides to protect the arm and cabinet from damage.

1. Bottom cover removal

Remove the screws ① to ⑧ in Photo 1.

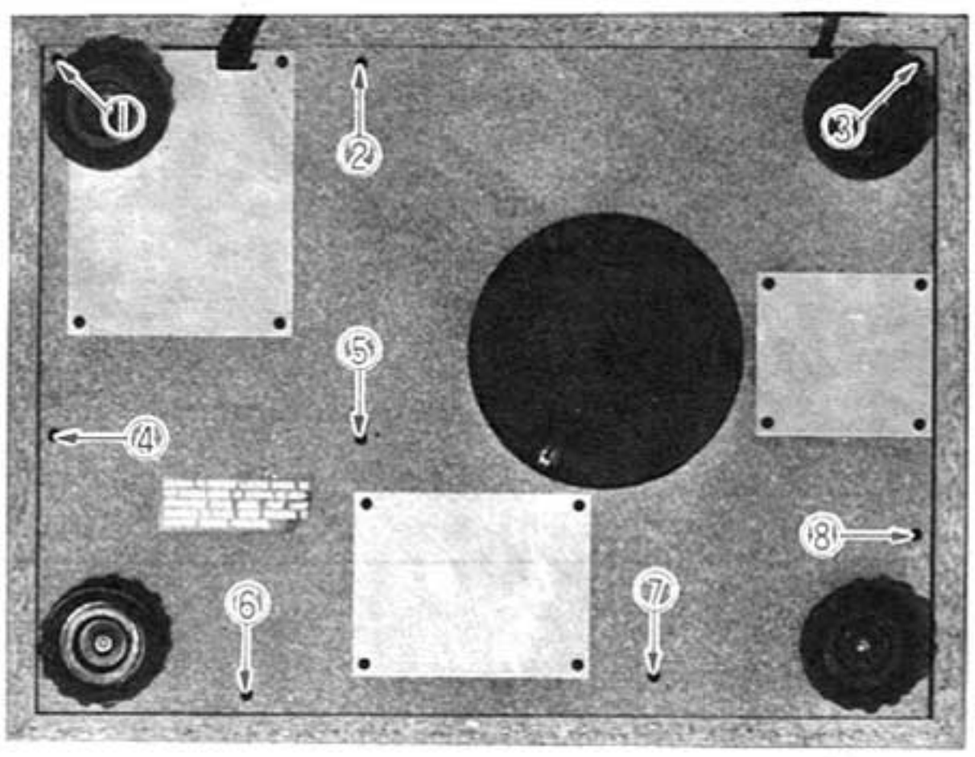

Photo 1

2. Main circuit board removal

1) Disconnect the connectors Ⓐ to Ⓓ in Photo 2.
2) Remove the lead wires.
3) Pinch the hooked end of circuit board holders ① to ④ on each corner of main circuit board by means of Long nose plier and gently lift the corner to remove the main circuit board, as shown Fig. 1.

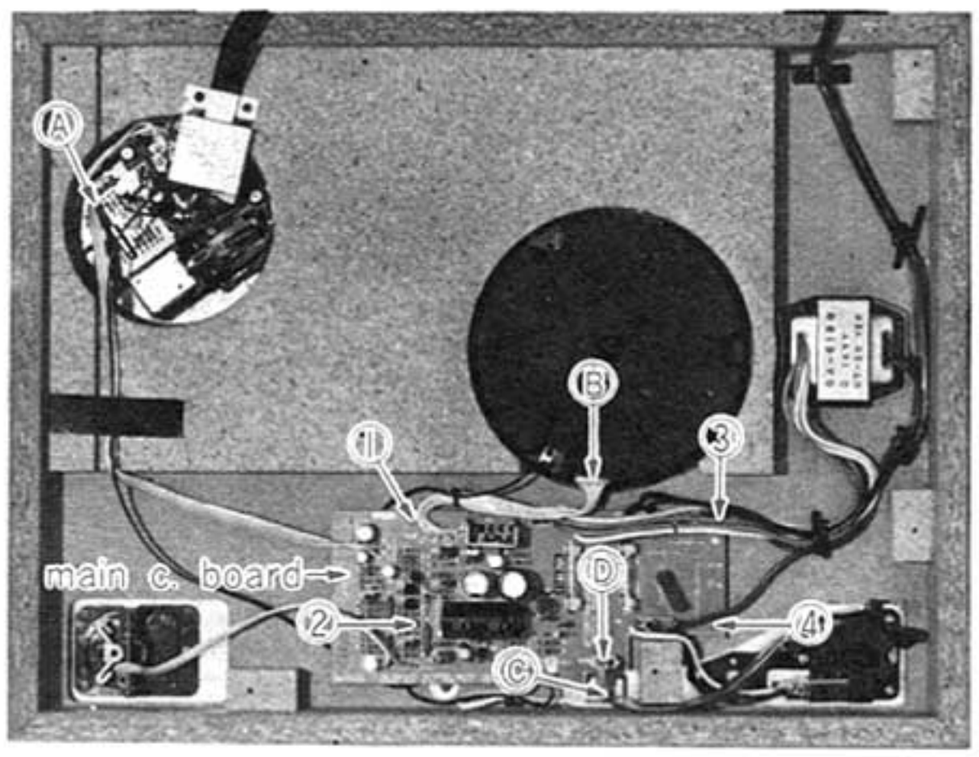

Photo 2

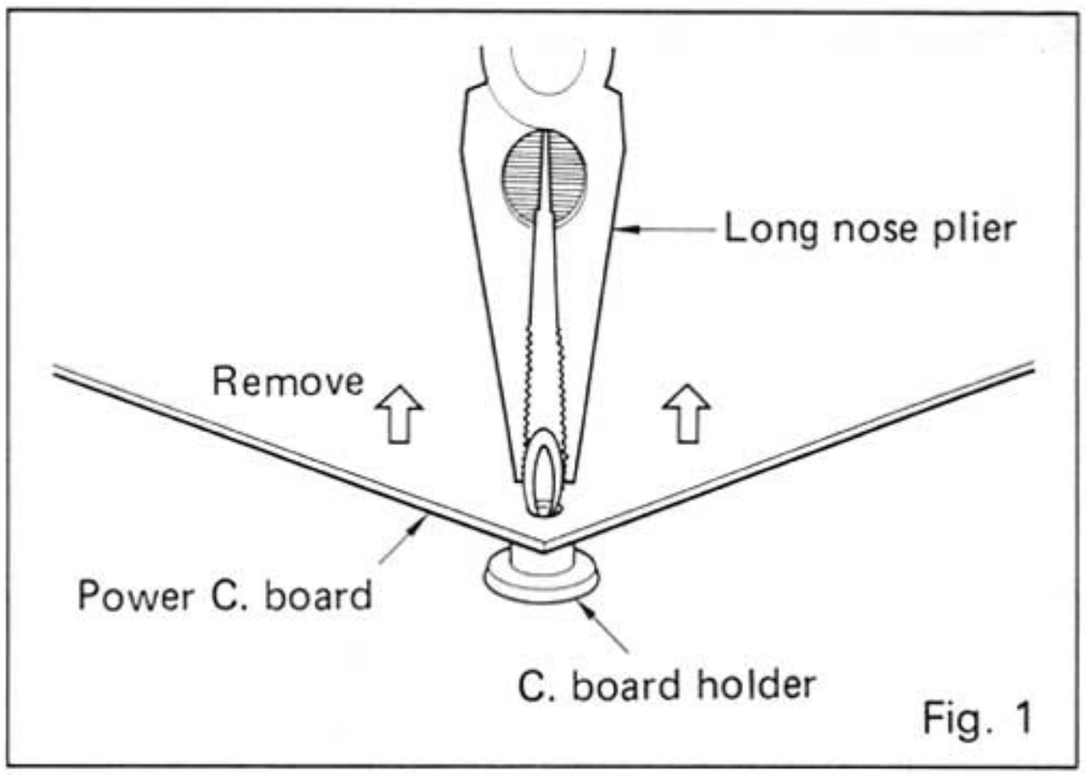

Fig. 1

3. Sensor and LED circuit board removal

1) Remove the screws ① and ② in Photo 3 and then remove the shutter ass'y.
2) Disconnect the connectors Ⓐ and Ⓑ.
3) Remove the screw ③ in Photo 3 and then remove the sensor and LED circuit board.

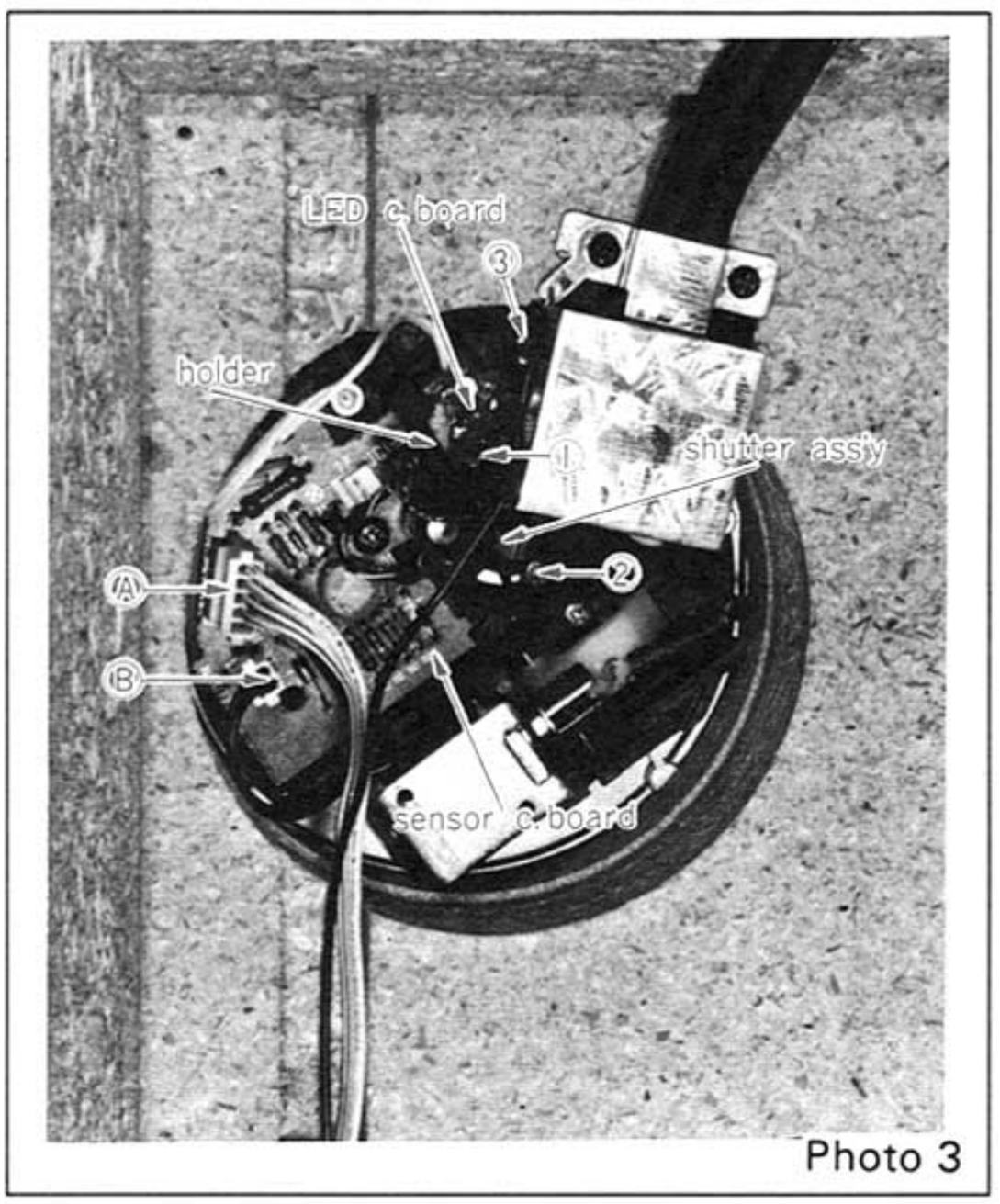

Photo 3

4. Tonearm ass'y removal

1) Remove the screws ① and ② in Photo 4 and then remove the shield case.
2) Remove the six lead wires in Photo 5.
3) Remove the sensor C. board according to item 3.
4) Remove the screws ③ to ⑤ in Photo 6.
5) Turn the unit upside down and loosen the lock knob for tonearm height adjusting and pull the tonearm ass'y upward.

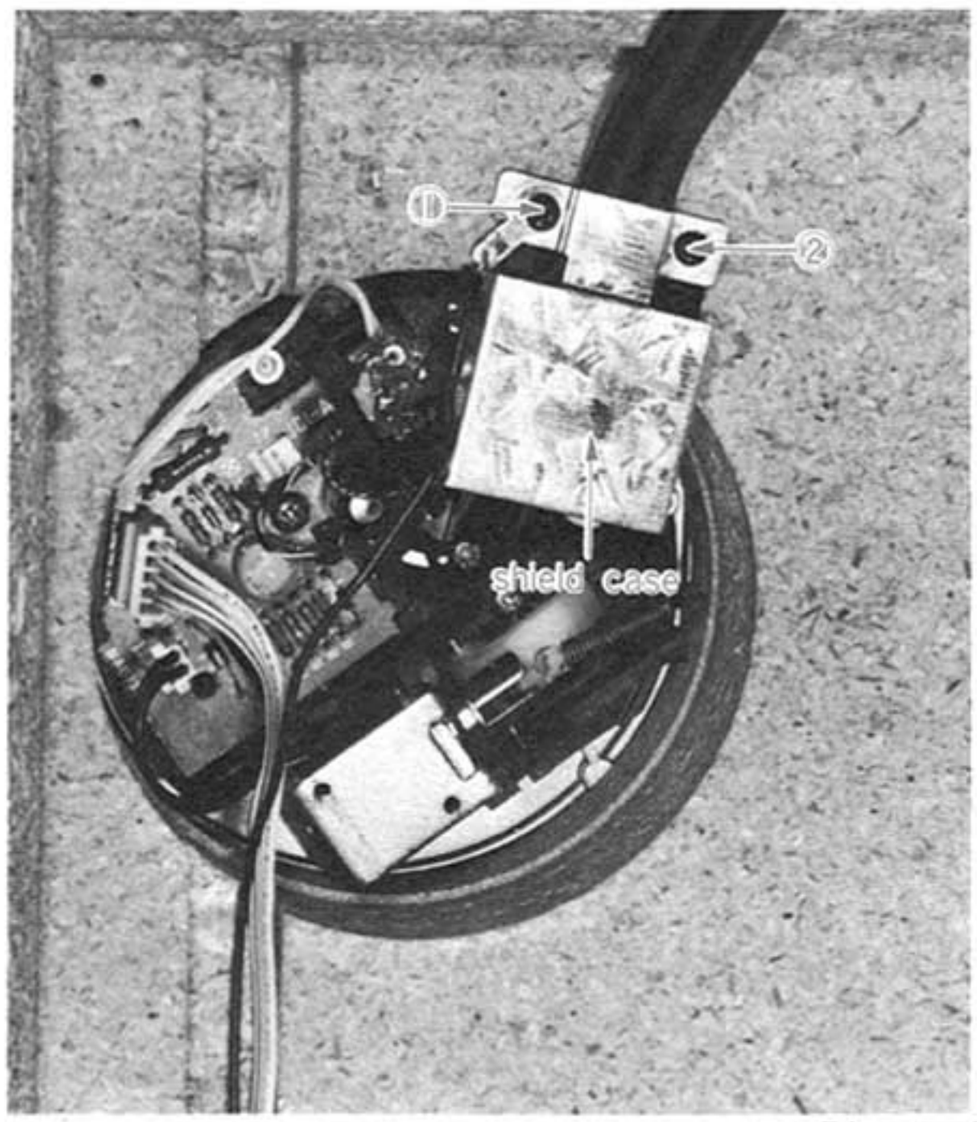

Photo 4

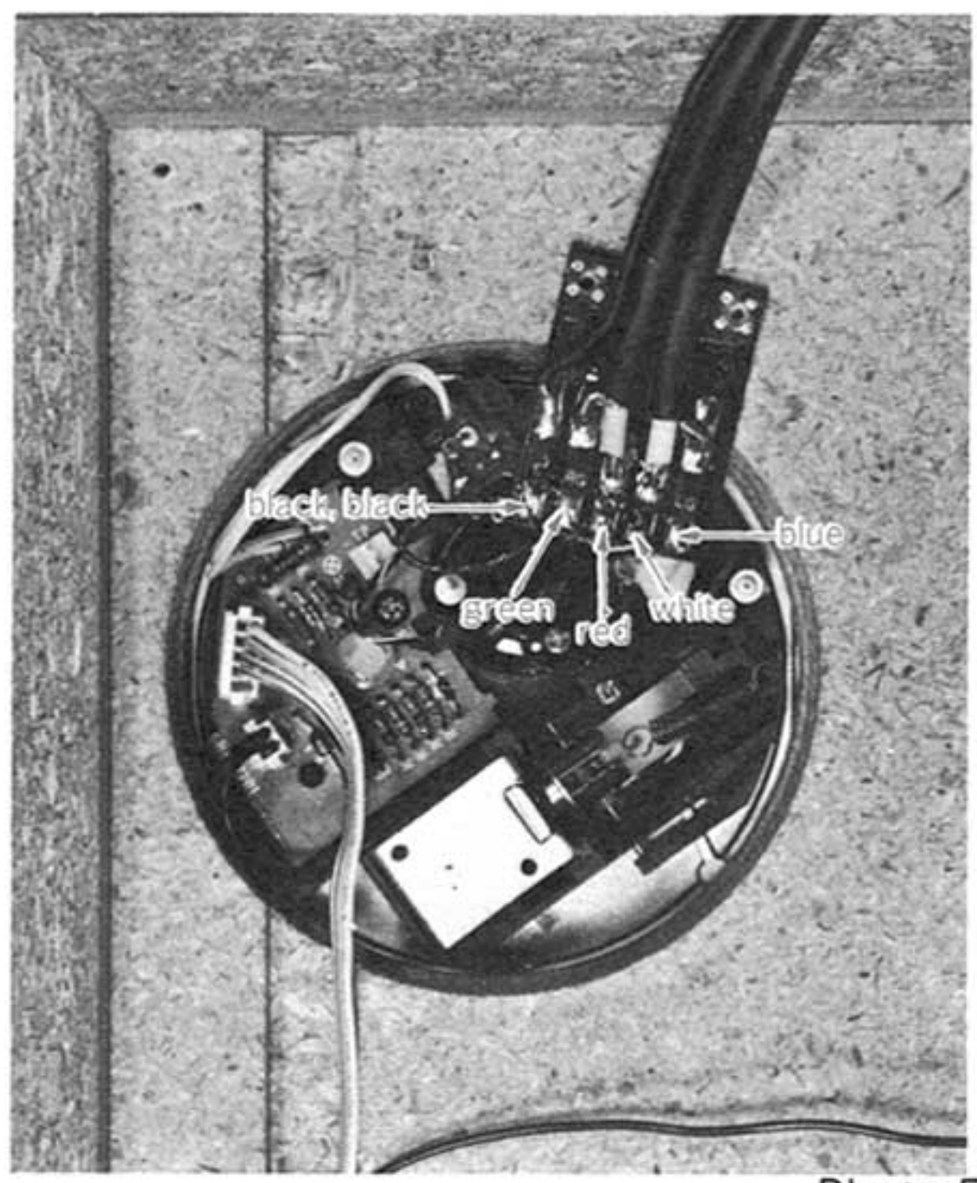

Photo 5

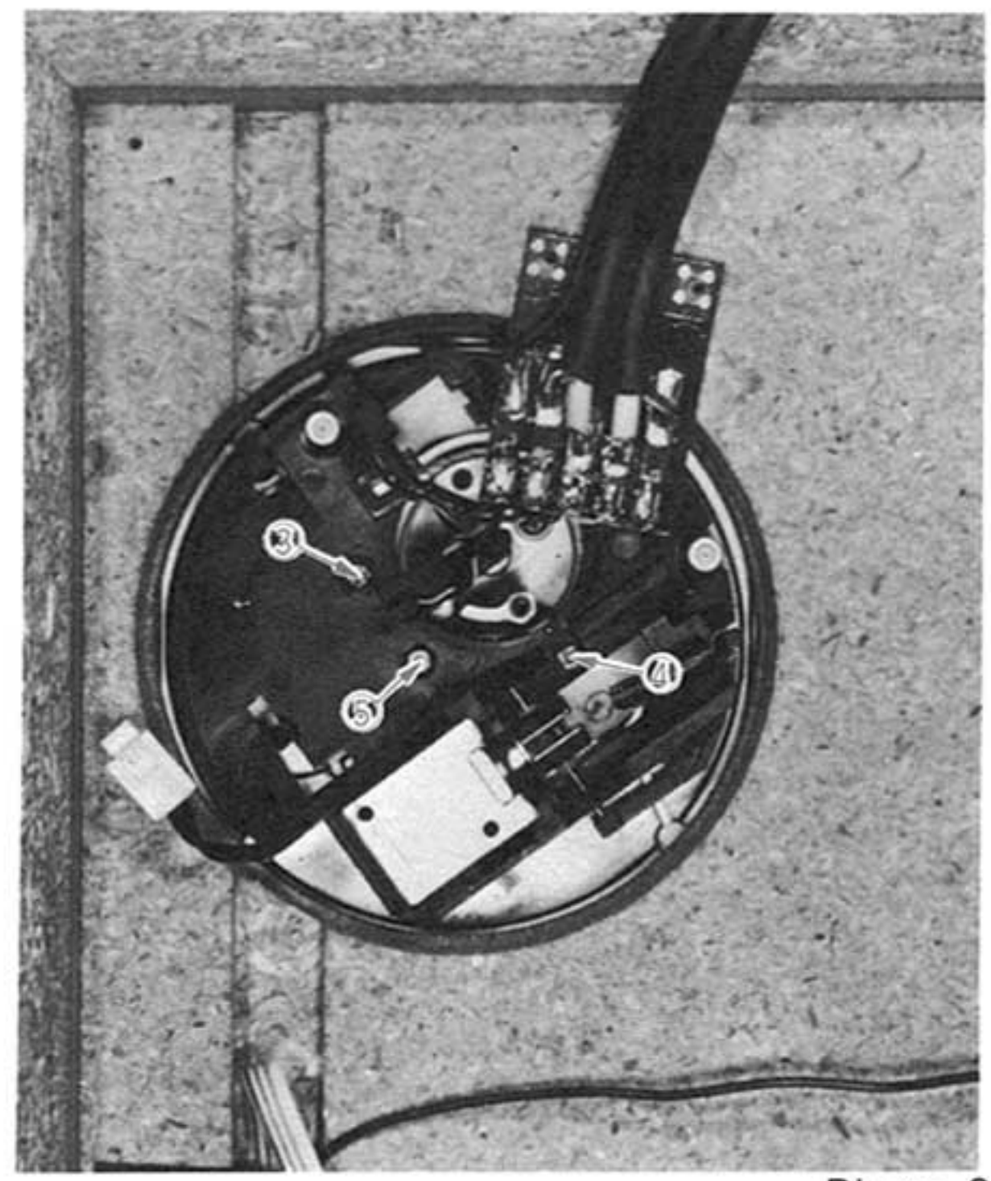

Photo 6

5. Motor removal

1) Disconnect the connector Ⓐ in Photo 7.
2) Remove the screw ① and grounding wire.
3) Turn the unit upside down and then remove the screws ② to ④. (Photo 8)
4) Remove the motor.
5) Remove the motor cover under the motor by remove two screws, then the motor servo circuit board can be removed.

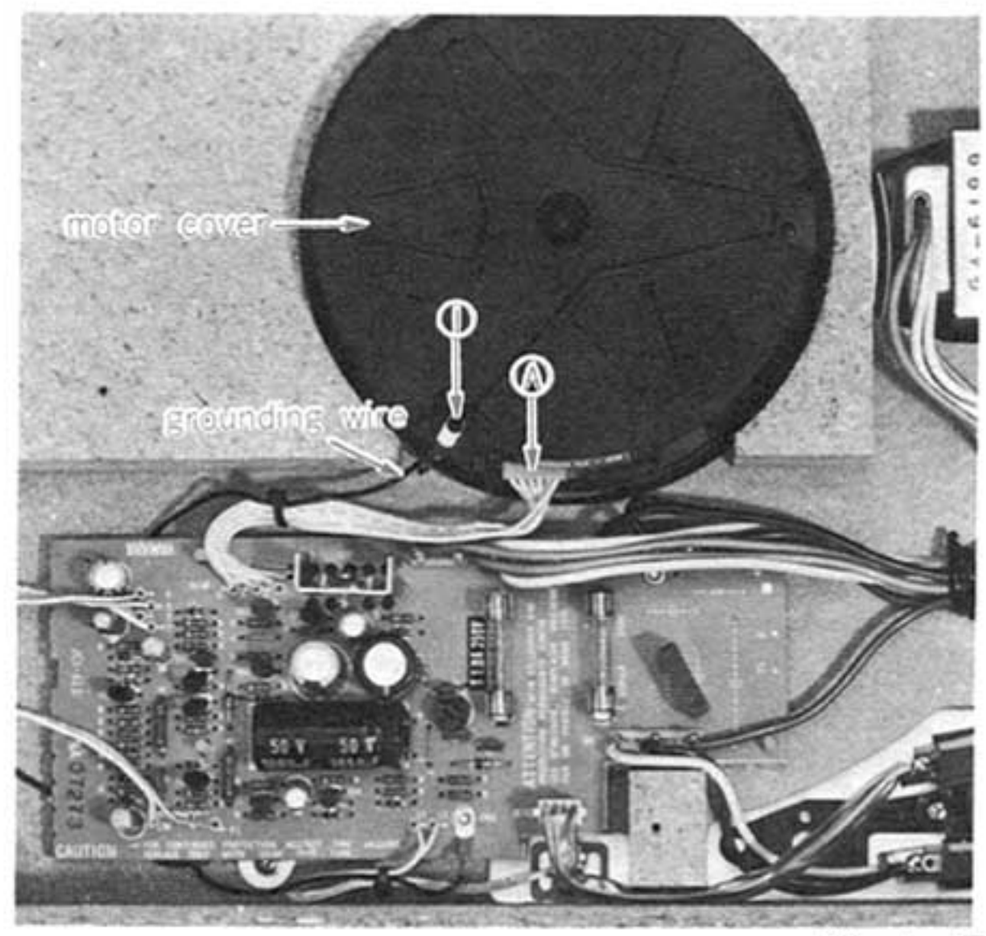

Photo 7

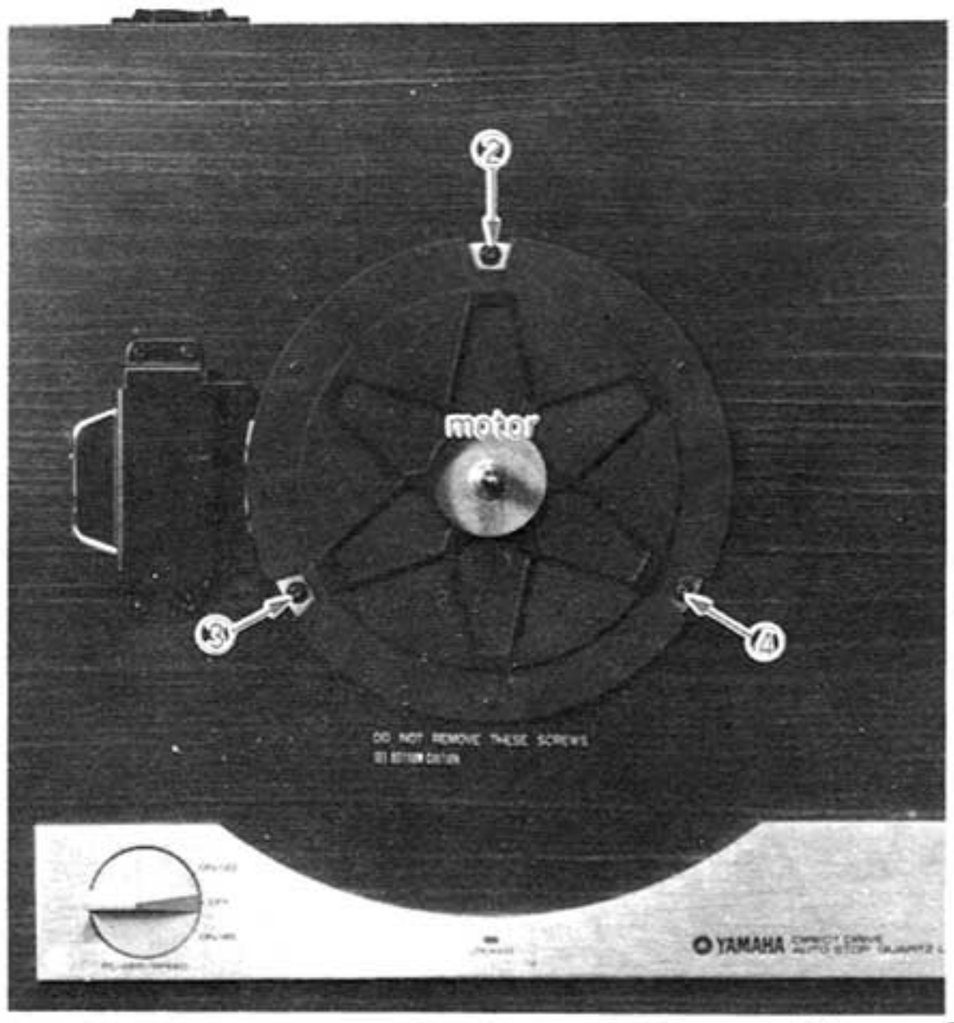

Photo 8

6. Micro switch removal

1) Remove the lead wires and connectors on PCB.
2) Spread the micro switch holder with a ⊖ driver as shown in Fig. 2, then remove the micro switch.

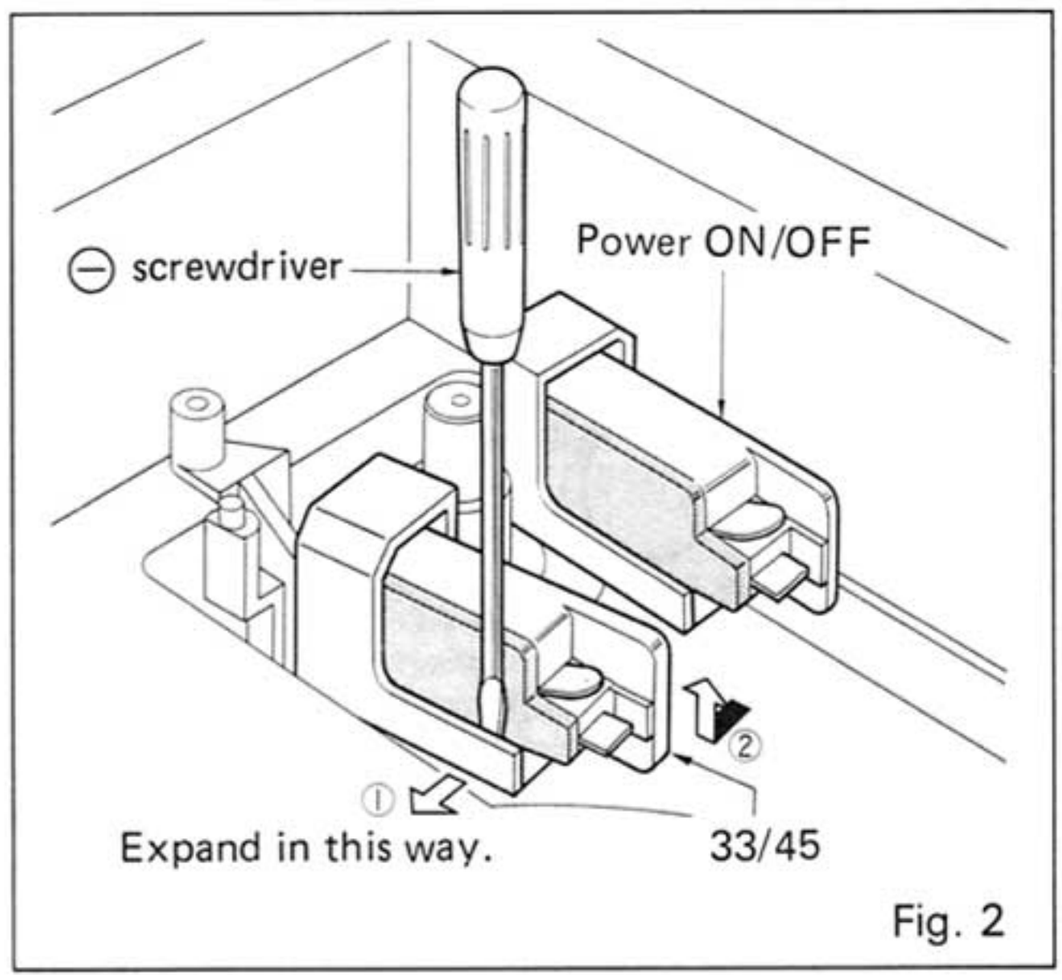

Fig. 2

SPECIFICATIONS

TURNTABLE MOTOR SECTION	
Drive System	Direct drive
Motor	Coreless DC Hall Motor
Servo System	Quartz Locked (PLL)
Start up Torque	1 kg-cm
Turntable Platter	31 cm (12-1/4") die-cast aluminum. Weight, 1.8 kg (4 lbs). Moment of inertia, 230 kg-cm^2 including rubber platter mat.
Speed	33-1/3, 45r.p.m.(with quartz locked-indicator)
Wow and Flutter	0.025% (WRMS), ±0.035% peak (IEC 98A weighted)
Signal-to-Noise Ratio	77 dB (IEC 98A weighted)

TONEARM SECTION	
Arm Type	S-shaped static balanced arm with gimbal supports
Tonearm Total Length	318 mm (12-1/2")
Tonearm Effective Length	242 mm (9-1/2")
Overhang	15 mm
Off-set angle	21° 15'
Stylus Tip Equivalent Mass	15 g
Tracking Error Angle	+2° 30', − 1°
Tonearm Stand Base	Die-cast zinc
Inside Force Canceler	String/weight Hanging type
Height Adjust	±4 mm
Tracking Force	Counter Ring type 0.25 g step
Cueing	Oil damping type
Auto-Up Stop	Non-contact photo-electronic speed detector, linked with cueing mechanism and power ON/OFF switch.
Headshell	Forged pure aluminum (interchangeable to EIA standard: weight 9 g)
Possible Cartridge Weights	3 ~ 12 g
Output Leads	NEGLEX 2496 Low Impedance biaxial cable

GENERAL	
Power Supplies	120V AC, 60 Hz (U.S. & Canadian Models)
	220V AC, 50 Hz (European Model)
	240V AC, 50 Hz (British & Australian Models)
	110/130/220/240V AC, 50/60 Hz (General Model)
Power Consumption	13W
Cabinet	
U.S. & Canadian Models	Ebony Particle board with polyvinyl chloride finish
Other Area Models	American Walnut Particle board with polyvinyl chloride finish
Dust Cover	Acryl
Hinges	Free-setting, detachable
Acoustic Insulators	Large double-folded insulators
Dimensions (W x H x D)	470 x 150 x 373 mm (18-1/2" x 6" x 14-11/16")
Weight	11 kg (24 lbs 4 oz)

Specifications subject to change without notice.

■ADJUSTMENTS

♦ Auto up checking

1. Connect amp. and speaker with the cartridge fixed. Check to see that AUTO UP is made at COUNT N of 10 to 20 by playing 3mm pitch side of the NEC test record ES-1008 at 45 rpm.
2. Check to see that AUTO UP is made or the COUNT N is over 21 even if AUTO UP was made by playing the 1mm pitch side at 45 rpm.
3. Adjust as follows if there is any abnormality.
   1) Connect the voltmeter whose input impedance is sufficiently bigger 1 MΩ between 5P and 2P of the sensor C. board connector (#201) and set power switch of the player to ON.
   2) Put the arm to arm rest with any light not being let in the sensor section from outside. In this case the voltmeter shall read V_1.
   3) Shift the arm towards the center shaft so that the voltmeter reading becomes maximum. At this time voltage shall be V_2.
   4) Next connect the voltmeter to TP (test point) of the sensor C. board and set the voltage V_{TP} as follows:
      $V_{TP} = 0.045\ (V_2 - V_1)$
      Setting tolerance: 30mV (±5%).
   5) Check again with the above test record.

♦ Shutter cam position adjustment

When AUTO UP is not made as specified, though the sensor C. board section indicates specified voltage, adjust the shutter cam position as follows:

1. Remove the rubber cap of the arm base.
2. Set the arm to rest position.
3. When AUTO UP COUNT is smaller (larger) than specified count, turn the shutter cam slightly to right (left) with a ⊖ screwdriver from upper view.
4. Check for AUTO UP COUNT with test record ES-1008.
5. Repeat the above steps until AUTO UP specifications can be satisfied.

(Note) The shutter cam return to original position if a turn is given.

♦ Motor RPM adjustment (Motor C. board)

Connect the 2-channels oscilloscope to the test point terminals (TP1) and (TP2) provide on the motor C. board (at the rear side of the motor) and adjust as follows:

1. 45 rpm adjustment

With the POWER/SPEED knob set to ON/45 side, adjust VR2 of the motor C. board so that the following specified value may be obtained.

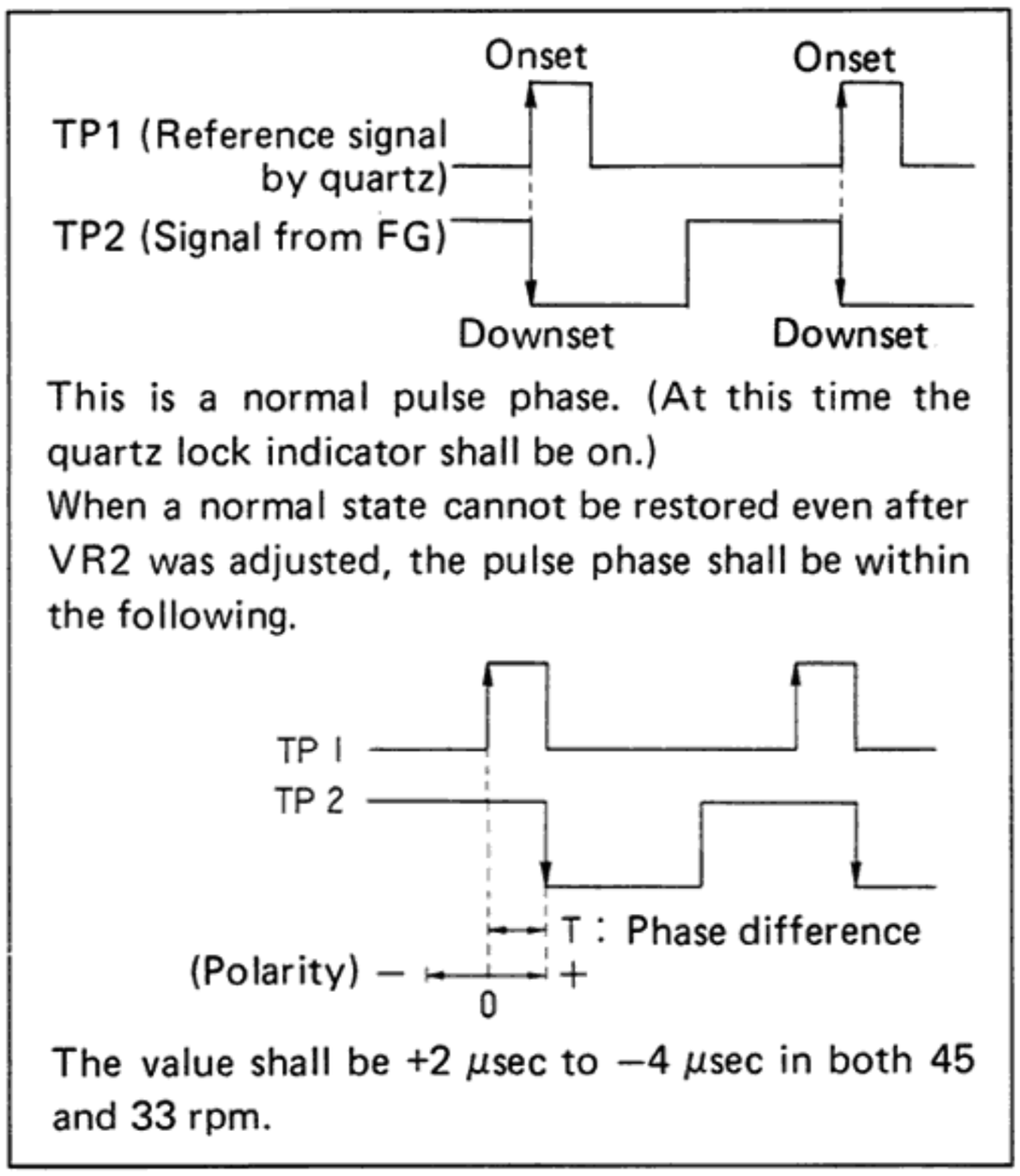

2. 33 rpm adjustment

With the POWER/SPEED knob set to ON/33 side, adjust VR1 so that specified value can be obtained like the 45 rpm adjustment.

Adjusting points (Motor C. board)

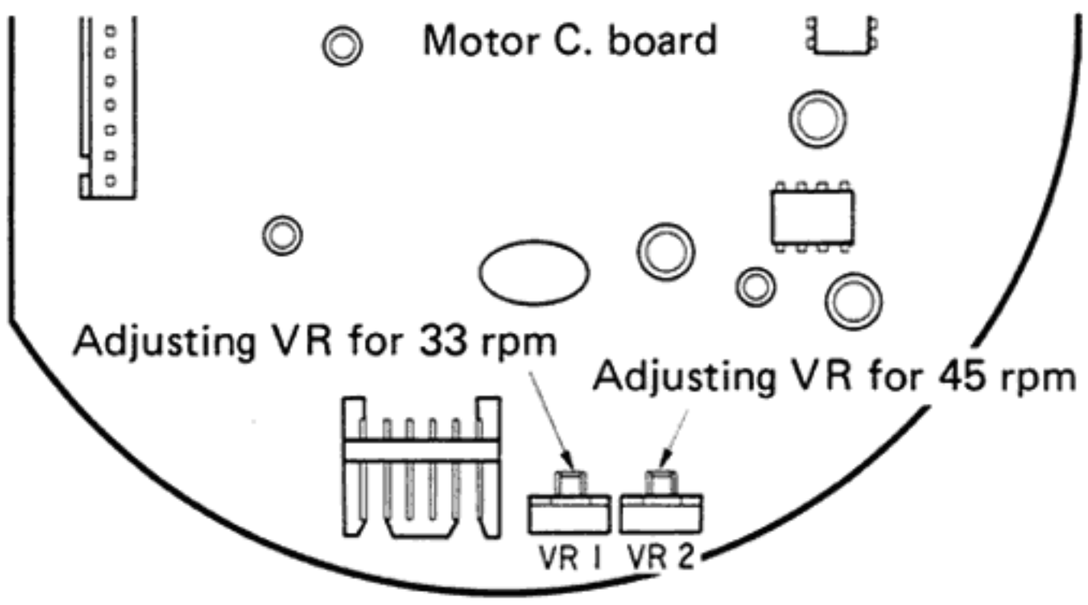

■CIRCUIT BOARDS/WIRING

This CIRCUIT BOARDS/WIRING is applicable to U.S.A and Canadian models.

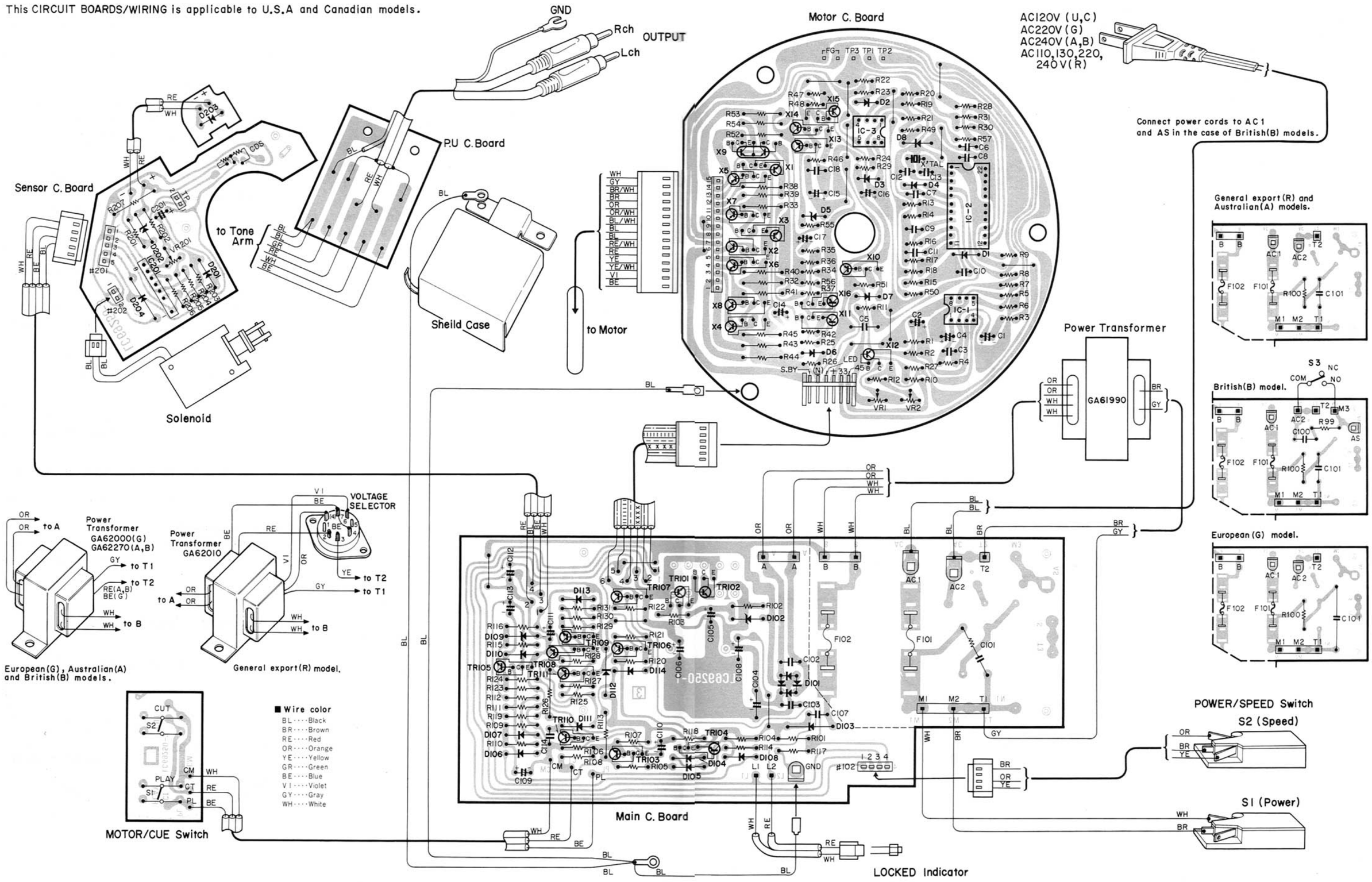

■SCHEMATIC DIAGRAM

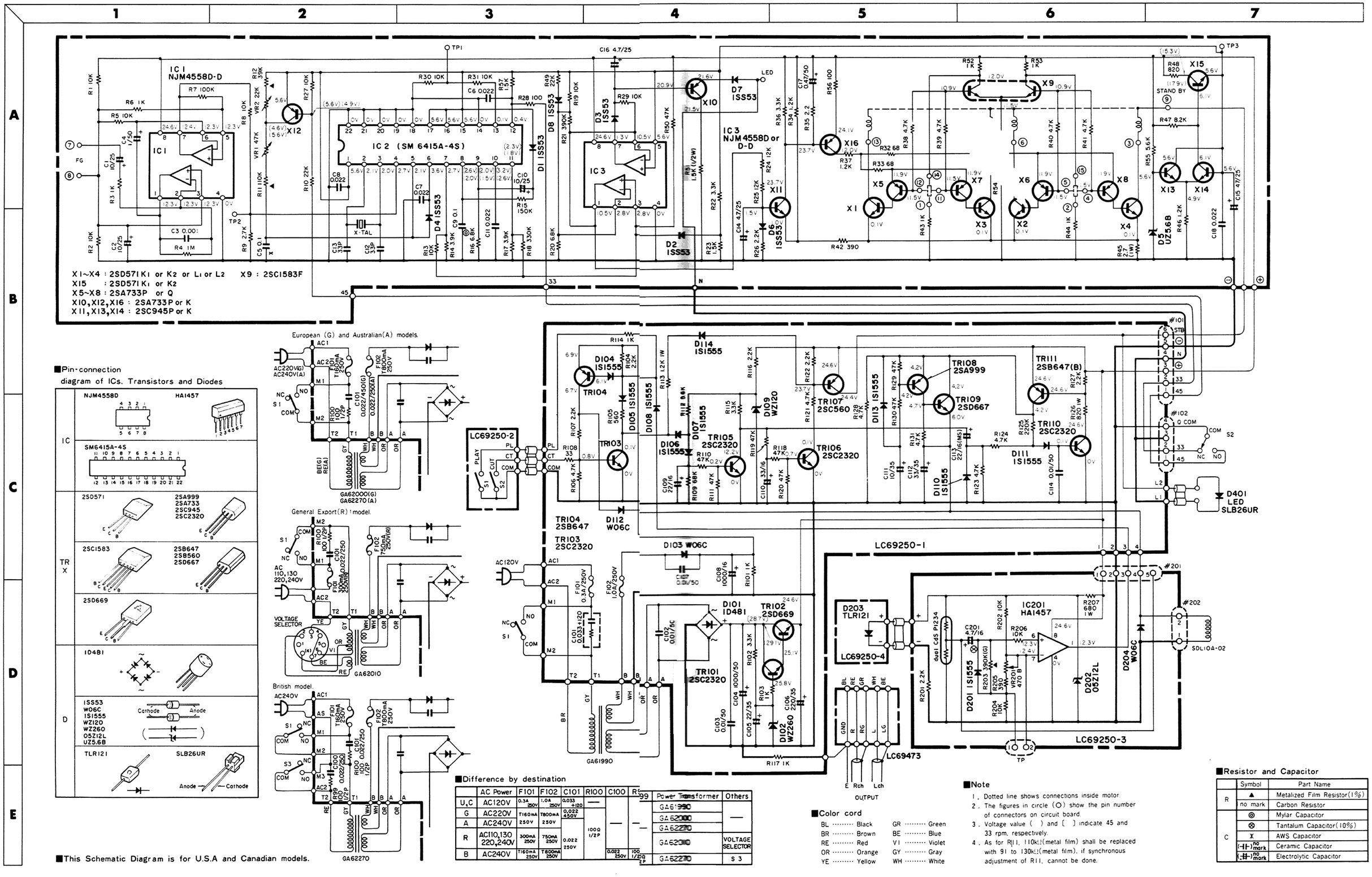

■Pin-connection diagram of ICs, Transistors and Diodes

■Difference by destination

	AC Power	F101	F102	C101	R100	C100	R99	Power Transformer	Others
U,C	AC120V	0.3A 250V	1.0A 250V	0.033 ±120	—	—	—	GA61990	—
G	AC220V	T160mA 250V	T800mA 250V	0.022 450V	100Ω 1/2P			GA62000	
A	AC240V							GA62270	
R	AC110,130 220,240V	300mA 250V	750mA 250V	0.022 250V				GA62010	VOLTAGE SELECTOR
B	AC240V	T160mA 250V	T800mA 250V			0.022 250V	100 1/2Ω 2P	GA62270	S 3

■Color cord

BL ····· Black
BR ····· Brown
RE ····· Red
OR ····· Orange
YE ····· Yellow
GR ····· Green
BE ····· Blue
VI ····· Violet
GY ····· Gray
WH ····· White

■Note

1. Dotted line shows connections inside motor.
2. The figures in circle (O) show the pin number of connectors on circuit board.
3. Voltage value ( ) and [ ] indicate 45 and 33 rpm, respectively.
4. As for R11, 110kΩ(metal film) shall be replaced with 91 to 130kΩ(metal film), if synchronous adjustment of R11, cannot be done.

■Resistor and Capacitor

	Symbol	Part Name
R	▲	Metalized Film Resistor(1%)
	no mark	Carbon Resistor
C	◎	Mylar Capacitor
	⊗	Tantalum Capacitor(10%)
	X	AWS Capacitor
	(‖) no mark	Ceramic Capacitor
	(‖) no mark	Electrolytic Capacitor

■This Schematic Diagram is for U.S.A and Canadian models.
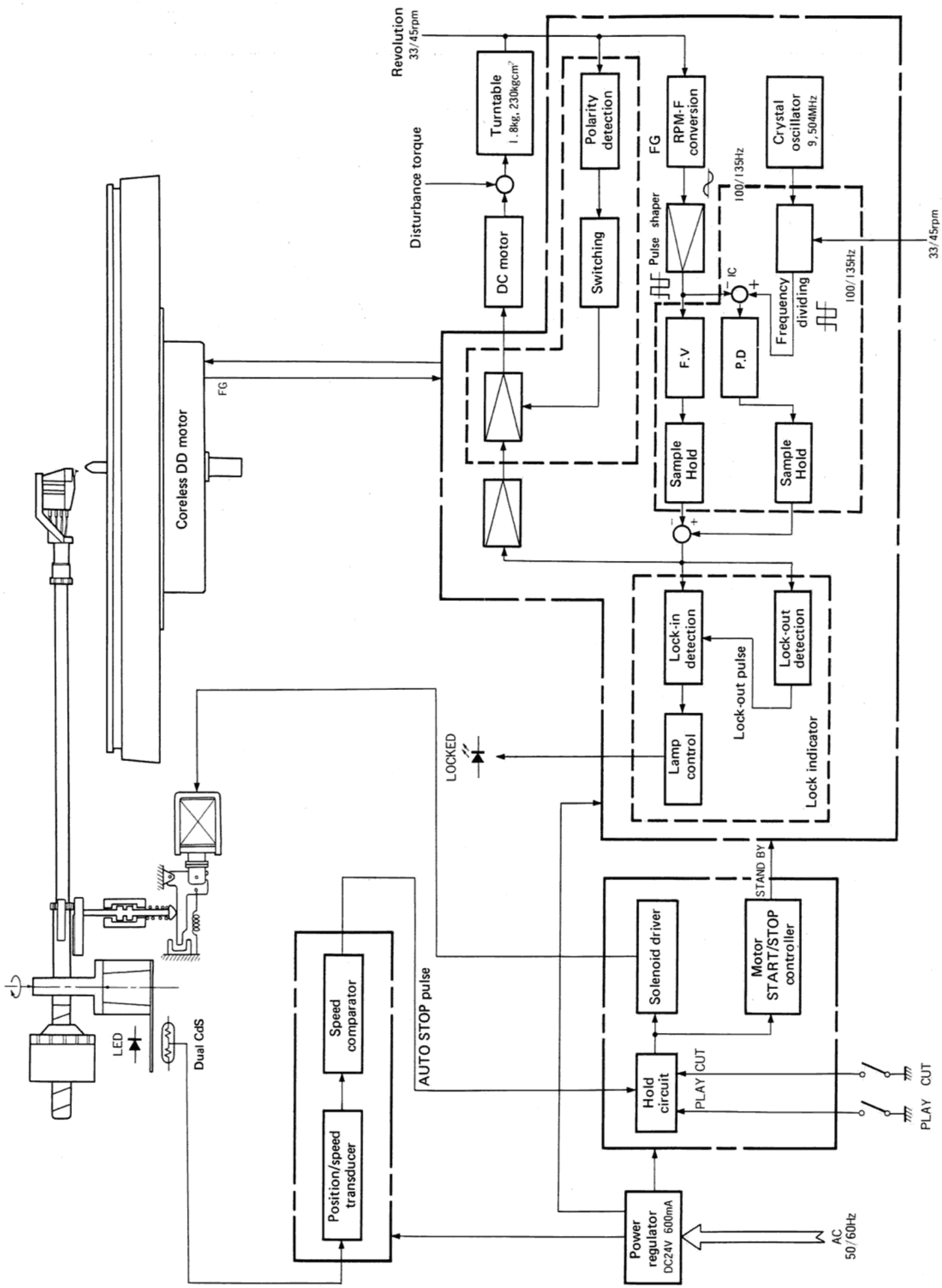
BLOCK DIAGRAM