UcD-XLITE v.5 -- UcD Discrete Class D Amplifier

Kartino Surodipo, Oct-2018

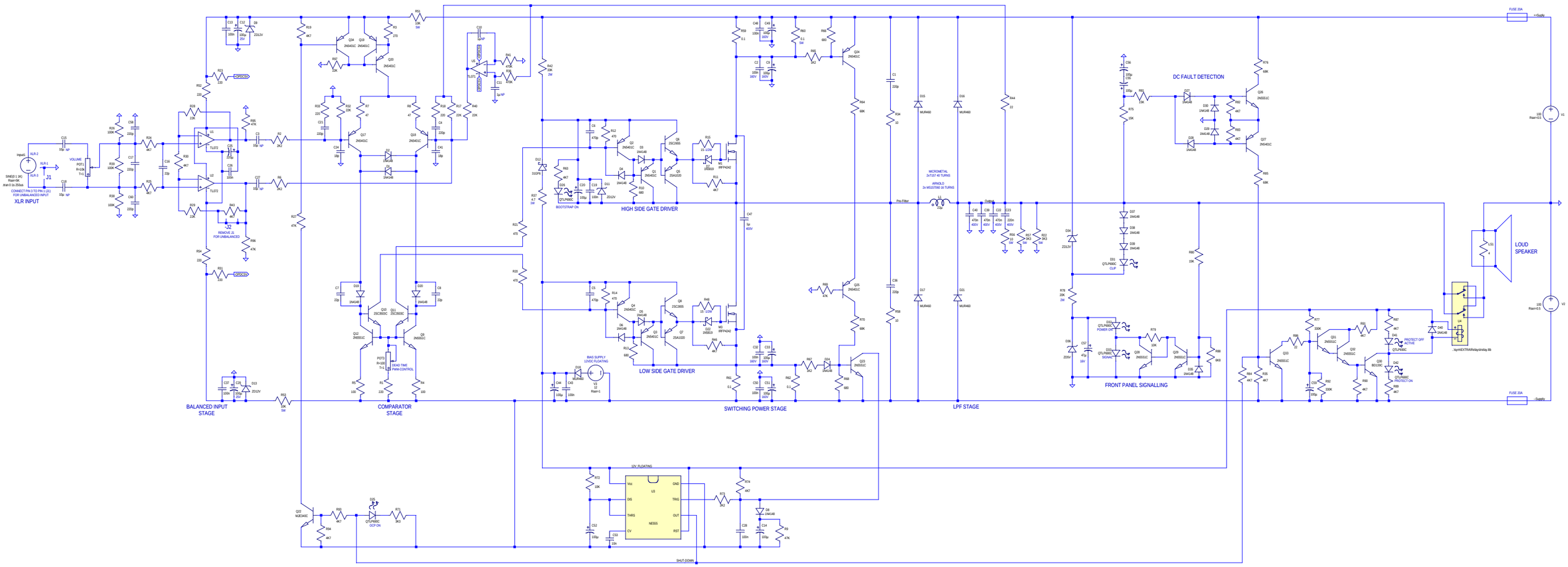

--- C:\DATA\LTC\Simulation\UcD_XLite\UcD-XLite V.5 - With DCO Servo.asc ---