UcD-XLina ver.16 -- UcD Discrete Class D Amplifier
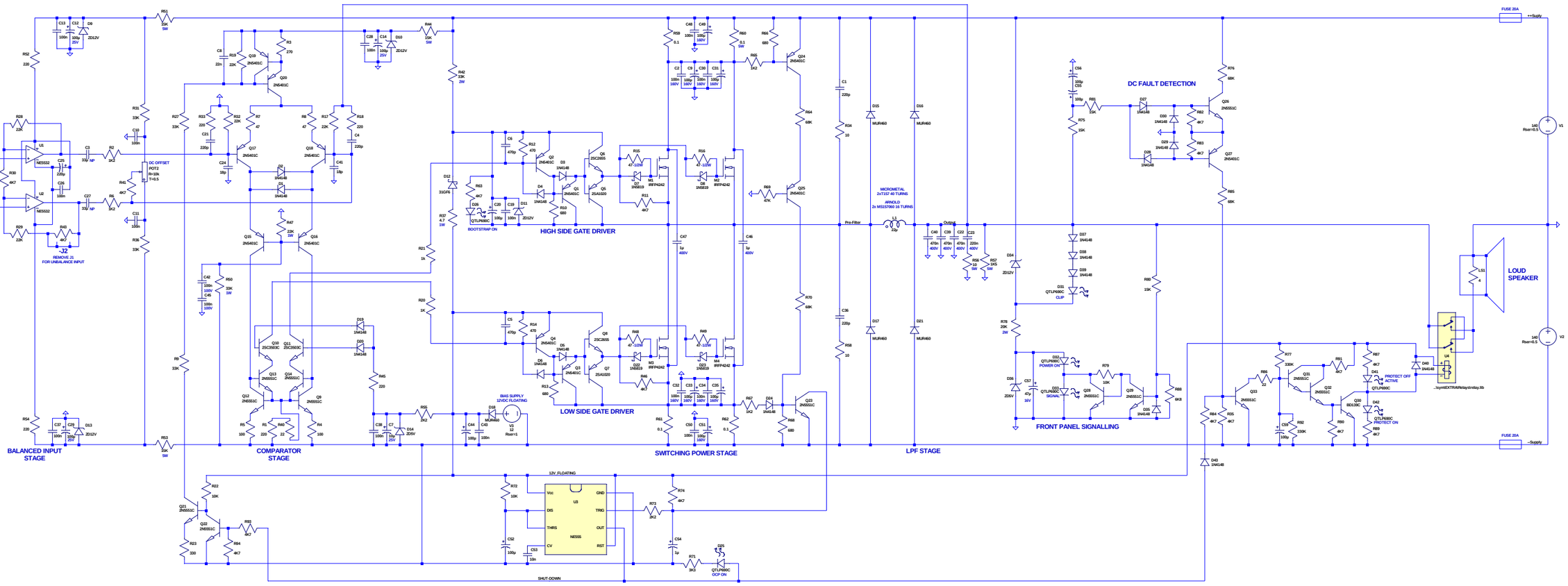
Kartino Surodipo, Sept 2016