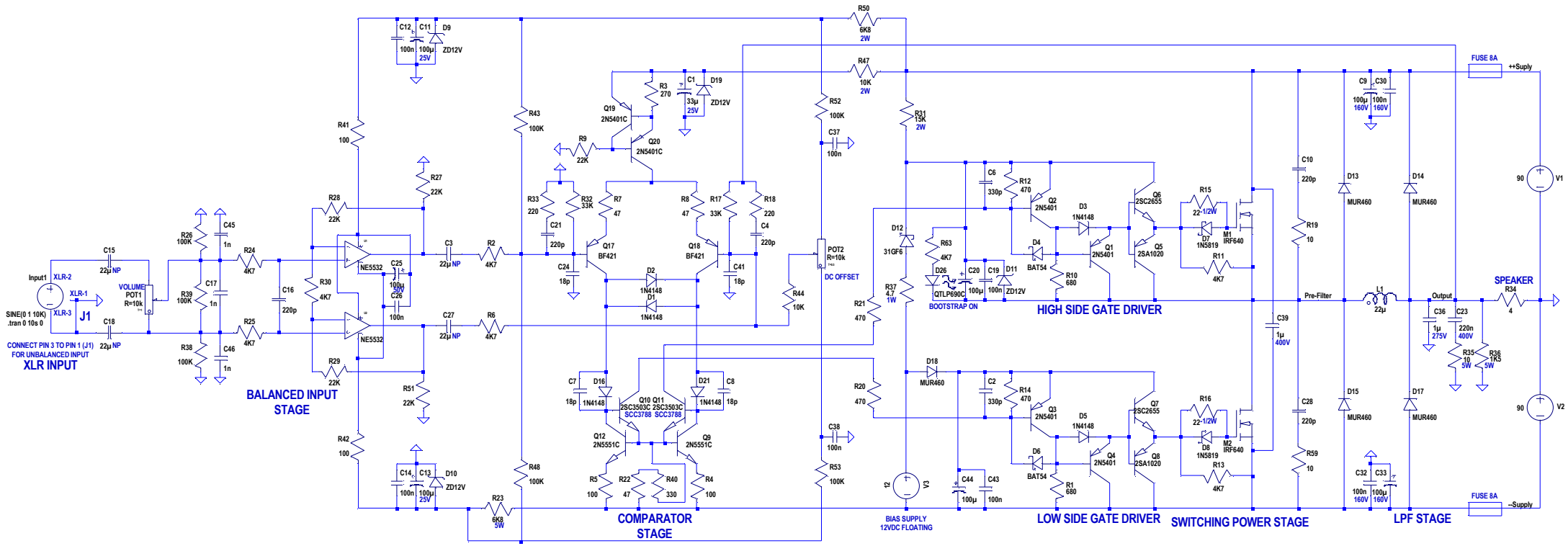

VERY IMPORTANT!:

1. TRIMPOT DCO ENSURE AT CENTER TRIM POSITION BEFORE SOLDERING

2. BEFORE SOLDERING MOSFET, DO TEST DC PROTECTION. PUT BIAS SUPPLY AND ALSO MAIN SUPPLY TO ALLOW TEST. APPLY 3V DC VOLTAGE AT OUTPUT BEFORE RELAY CONTACT TO GND.

3. ON FIRST STARTUP, SET DC OFFSET, WITHOUT SPEAKER IS CONNECTED AFTER SWITCHING ENABLE, TRIM VR FOR DCO AND ENSURE DCO IS STABLE. DC OFFSET MUST BE AS MINIMUM AS POSSIBLE LESS THAN 10mV. UNLESS OTHERWISE PUMPING EFFECT AFTER SPEAKER CONNECTION IS VERY DANGERUS, WHICH CAN DAMAGE PSU DUE TO UNBALANCED POWER SUPPLY VOLTAGE RAILS.

4. AFTER ABOVE IS COMPLETE, CONNECT AMPLIFIER TO SPEAKER AND DO RUN TEST OF THE AMPLIFIER. DO MONITOR DC OFFSET AND PSU VOLTAGE RAILS MUST BE IN BALANCED. DO SET DCO TRIM AGAIN AND ENSURE AMPLIFIER IS STABE.

UcD-SLite -- Superlite UcD Discrete Class D v.2 FINAL

Kartino Surodipo, Mar 2019

--- C:\Users\MiniPC\Desktop\Class D\UcD Superlite\UcD-Super Lite V.2.asc ---