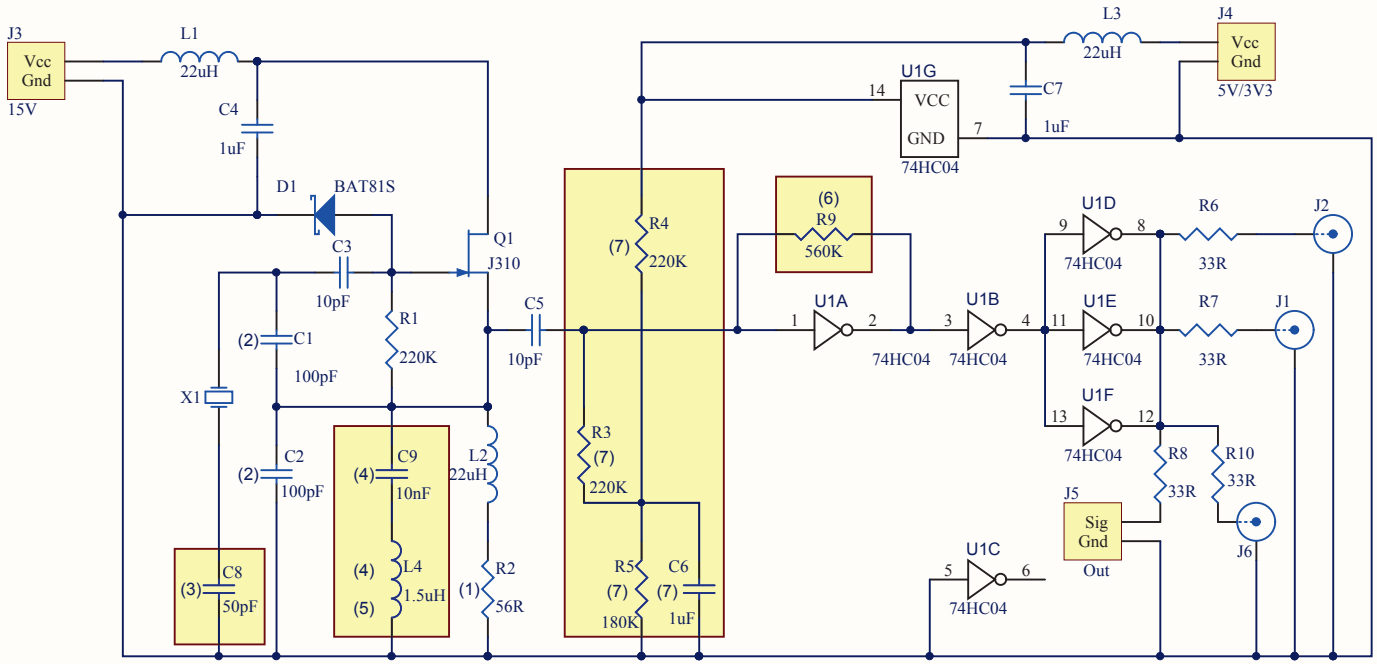

(1) Adjust for 18-20 mA without crystal

(2) C1 = C2 = 1000 / f0

(3) 50/100pF for measurement only, 0R0 for final application

(4) overtone crystal only

(5) 3rd overtone L4 = 1 / (6.28 * (F3rd * 2/3)) ^2 * C2 in Henry

(5) 5th overtone L4 = 1 / (6.28 * (F3rd * 4/5)) ^2 * C2 in Henry

(6) slicer 1st option 50% duty cycle

(7) slicer 2nd option

Title TWTMC-C		
Size A4	Number 1	Revision
Date: 10/01/2015		Sheet of
File: C:\Users\..\TWTMC-C.SchDoc		Drawn By: