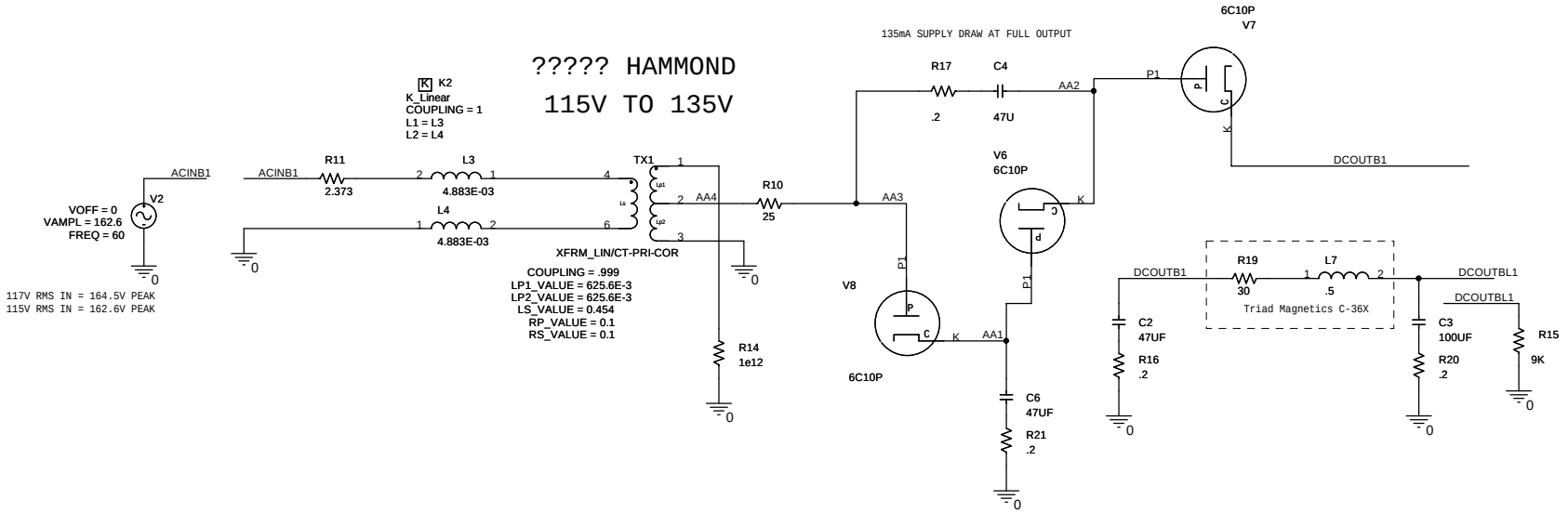

Title	triple-V	
Size B	Document Number triple-V	Rev
Date: Monday, June 09, 2025	Sheet 1 of 1	