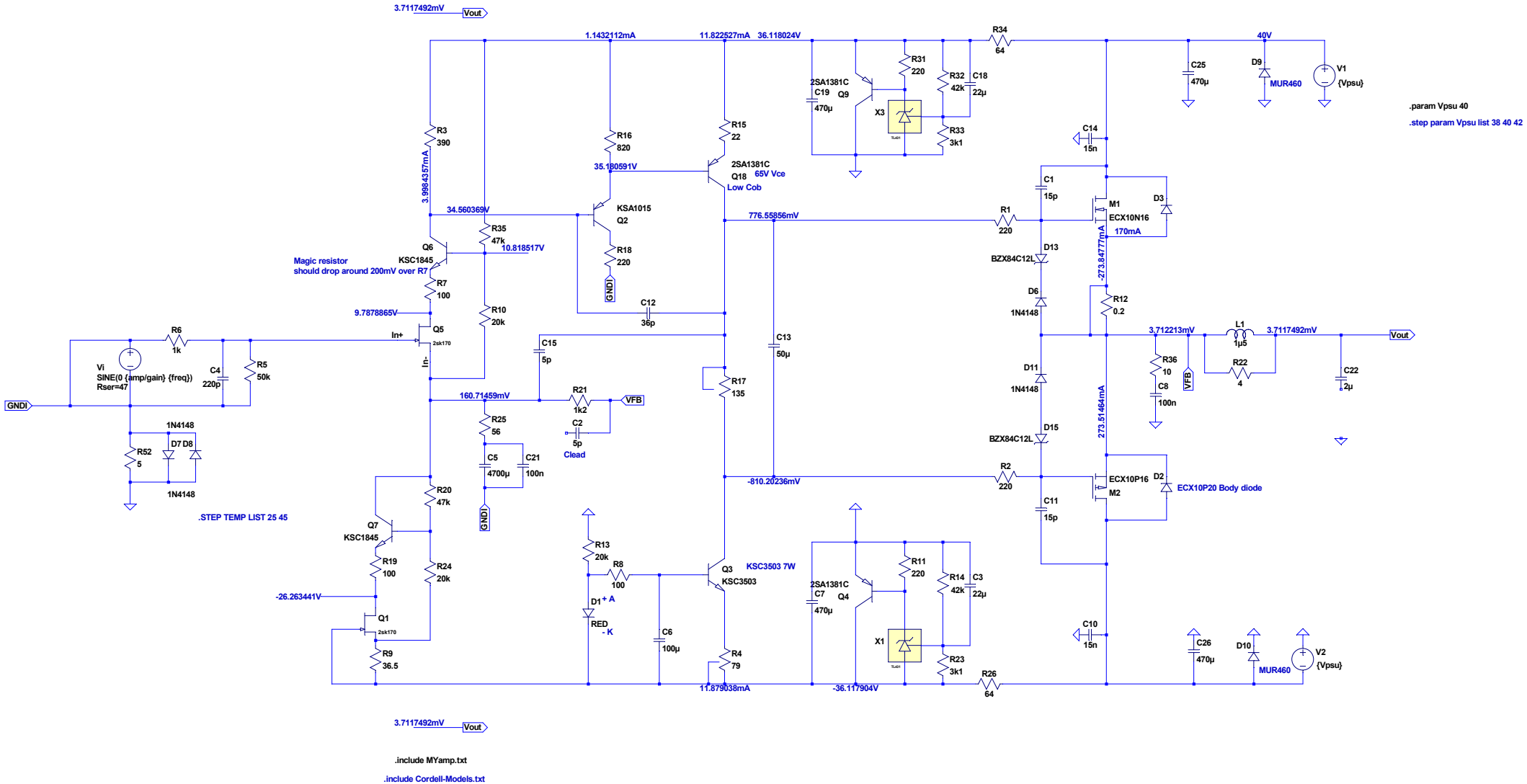
3.7117492mV
Vout
1.1432112mA
11.822527mA
36.118024V
R34
64
40V
C25
470µ
D9
MUR460
V1
{Vpsu}
.param Vpsu 40
.step param Vpsu list 38 40 42
2SA1381C
C19
Q9
470µ
X3
TL431
R31
220
R32
42k
C18
22µ
R33
3k1
C14
15n
R3
390
3.9984357mA
R16
820
35.180591V
R15
22
2SA1381C
Q18
65V Vce
Low Cob
34.560369V
R35
47k
10.818517V
KSA1015
Q2
R18
220
GND
776.55856mV
C1
15p
M1
ECX10N16
170mA
D3
R1
220
Q6
KSC1845
Magic resistor
should drop around 200mV over R7
R7
100
9.7878865V
C12
36p
BZX84C12L
D13
D6
1N4148
-273.84771mA
R12
0.2
R10
20k
Q5
2sk170
In+
In-
R6
1k
C15
5p
C13
50µ
3.712213mV
L1
1µ5
3.7117492mV
Vout
R36
10
C8
100n
VFB
R22
4
C22
2µ
Vi
SINE(0 {amp/gain} {freq})
Rser=47
C4
220p
R5
50k
GND
160.71459mV
R21
1k2
VFB
R17
135
D11
1N4148
R25
56
C2
5p
Clead
C5
4700µ
C21
100n
D15
BZX84C12L
273.51464mA
1N4148
D7 D8
R52
5
1N4148
R2
220
ECX10P16
M2
D2
ECX10P20 Body diode
-810.20236mV
C11
15p
.STEP TEMP LIST 25 45
R20
47k
GND
Q7
KSC1845
R19
100
R24
20k
R13
20k
R8
100
Q3
KSC3503
KSC3503 7W
2SA1381C
C7
Q4
470µ
R11
220
R14
42k
C3
22µ
-26.263441V
D1
+ A
RED
- K
C6
100µ
X1
TL431
C10
15n
C26
470µ
D10
MUR460
V2
{Vpsu}
Q1
2sk170
R9
36.5
R4
79
11.879038mA
-36.117904V
R23
3k1
R26
64
3.7117492mV
Vout
.include MYamp.txt
.include Cordell-Models.txt
VOUT
LOAD
RL1
{rload}
MEASUREMENT