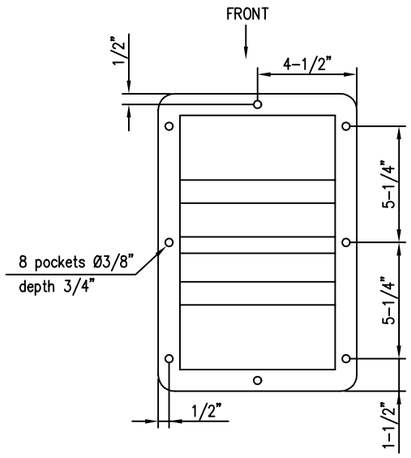

MATERIAL: 3/4" MDF – transmission walls
1" MDF – cabinet and base

The base must be removable to adjust filling materials.
Use threaded inserts and maschine skrews to secure base.

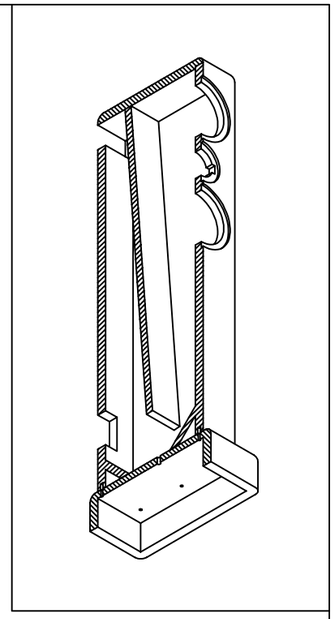

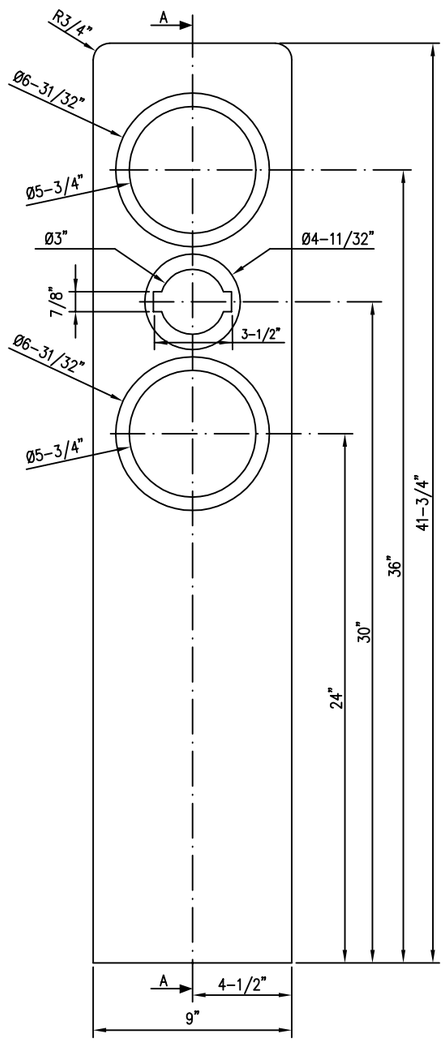

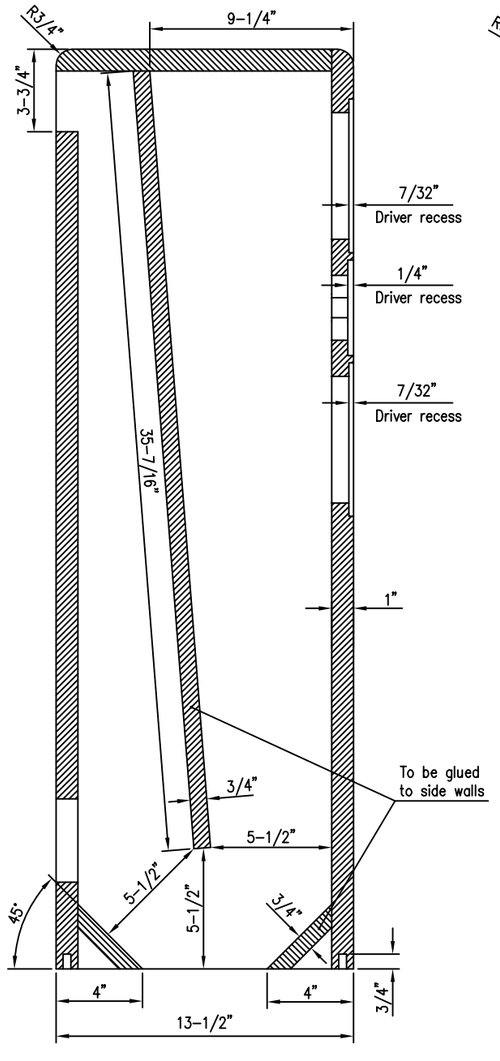

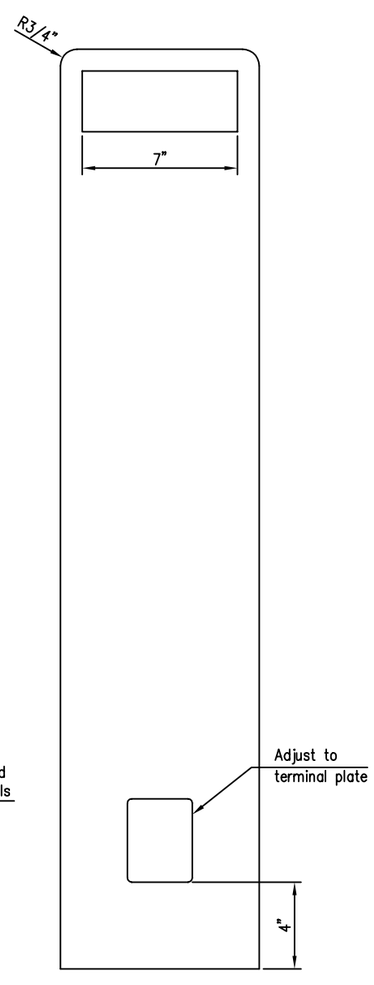

BASE

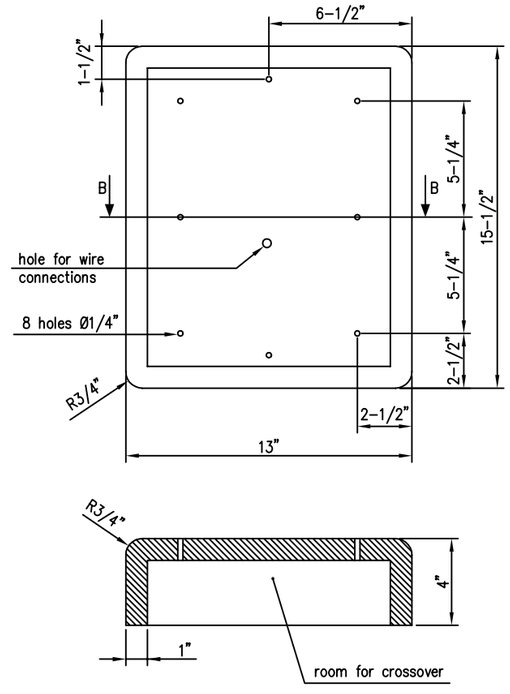

Antall	Benevnelse	Nr.	Tegn.nr.	Matr.	Bemerkning

	Dato	Sign.
Tegnet	29.11.2001	T.J.
Kontrollert		
Godkjent		

seas FABRIKKER A.S.

M?lestokk 1:5

CABINET THOR

K00218

Erstatning for:

Erstattet av: