ORDER NO. SD7608-1123

Service Manual

Stereo Integrated Amplifier

SU-8600

(X), (XG), (XGH), (XSD), (XSW), (XE), (XAL)

TECHNICAL SPECIFICATIONS

Specifications are subject to change without notice for further improvement.

POWER AMPLIFIER SECTION

1 kHz continuous power output	85W + 85W (4Ω)
both channel driven	76W + 76W (8Ω)
20 Hz ~ 20 kHz continuous power output	80W + 80W (4Ω)
both channel driven	73W + 73W (8Ω)
Total harmonic distortion	0.08% at rated power (20 Hz ~ 20 kHz) 0.02% at half power (1 kHz)
Intermodulation distortion	0.08%
Frequency response	20 Hz ~ 20 kHz $^{+0}_{-0.2}$ dB
S/N (IHF, A)	115 dB
Residual hum & noise	0.3 mV
Damping factor	25 (4Ω), 50 (8Ω)
Input sensitivity & Impedance	1V/47 kΩ
Load impedance	
MAIN or REMOTE	4 ~ 16Ω
MAIN + REMOTE	8 ~ 16Ω
Power bandwidth (both channels driven at 8Ω)	5 Hz ~ 70 kHz, −3 dB

PREAMPLIFIER SECTION

Input sensitivity & impedance	
PHONO 1, 2	2.0mV/47kΩ
TUNER, AUX	150mV/47kΩ
TAPE DECK 1 REC/PLAY input	150mV/47kΩ
TAPE DECK 1, 2 PLAYBACK	150mV/47kΩ
PHONO maximum input voltage (1 kHz, RMS)	200mV
Total harmonic distortion	0.08%
S/N (IHF, A) **PHONO 1, 2**	73 dB
TUNER, AUX	92 dB
Frequency response	
PHONO 1, 2	RIAA standard curve ±0.4 dB
TUNER, AUX	20 Hz ~ 20 kHz, ±0.3 dB
Tone controls **BASS**	50 Hz, +12 dB ~ −12 dB
TREBLE	20 kHz, +12 dB ~ −12 dB
Turnover frequency **BASS**	250 Hz, 500 Hz
TREBLE	2.5 kHz, 5 kHz
Filters **LOW**	30 Hz, −12 dB/oct.
HIGH	8 kHz, −12 dB/oct.
Loudness control (volume at −30 dB)	100 Hz, +8 dB
Muting	−20 dB
Output voltage	
PREOUT	rated 1V, maximum 8V
TAPE DECK 1 REC/PLAY output	30mV
TAPE DECK 1, 2 REC OUT	150mV

GENERAL

Power supply	110/120/220/240V 240V only (Set for Australia) 220/240V (Set for England, Swiss & Scandinavian)
Power consumption	700W
Dimensions (W x H x D)	450 x 173 x 352mm (17 23/32" x 6 15/16" x 13 27/32")
Weight	12.7kg (28.0 lb.)

TECHNISCHE DATEN (DIN 45 500)

Spezifikationen können infolge von Verbesserungen ohne Ankündigund geändert werden.

VERS TÄRKERTEIL

RMS-Dauertonleistung bei 1 kHz	
beide Kanale zusammen ausgesteuert	2 x 85W (4Ω) 2 x 76W (8Ω)
RMS-Dauertonleistung bei 20 Hz ~ 20 kHz	
beide kanäle zusammen ausgesteuert	2 x 80W (4Ω) 2 x 73W (8Ω)
Leistungsbandbreite (beide Kanäle zusammen ausgesteuert bei 4Ω)	5Hz ~ 50kHz, −3 dB
Harmonische Verzerrungen	
Nennleistung bei 40 Hz ~ 16000 Hz, 4Ω	0.08%
Intermodulationsverzerrung	
Nennleistung bei 250Hz : 8000 Hz = 4:1, 4Ω	0.08%
Frequenzgang	20 Hz ~ 20 kHz, ±0.3 dB
Fremdspannungsabstand	
Nennleistung	**PHONO** 60 dB, **TUNER AUX** 85 dB
50mW Ausgangsleistung	**PHONO** 55 dB, **TUNER AUX** 55 dB
Hum & Noise	0.3mV
Eingangsempfindlichkeit & Impedanz	1V/47 kΩ
Dampfungsfaktor	25 (4Ω), 50 (8Ω)
Endimpedanz **MAIN oder REMOTE**	4 ~ 16Ω
MAIN + REMOTE	8 ~ 16Ω

VORVERSTÄRKERTEIL

Eingangsempfindlichkeit & Impedanz	
PHONO 1, 2	2mV/47 kΩ
TUNER, AUX	150mV/47 kΩ
TAPE DECK 1, 2 PLAYBACK	150mV/47 kΩ
TAPE DECK 1 REC/PLAY Wiedergabe	150mV/47 kΩ
PHONO Maximale Eingangsspannungen (1 KHz, RMS)	200mV
Fremdspannungsabstand (IHF, A) **PHONO 1, 2**	73 dB
TUNER, AUX	92 dB
Harmonische Verzerrungen	0.08%
Frequenzgang **PHONO 1, 2**	RIAA Standardkurve ±0.4 dB
TUNER, AUX	20 Hz ~ 20 kHz, ±0.3 dB
Klangregler **BÄSSE**	50 Hz, +12 dB ~ −12 dB
HÖHEN	20 kHz, +12 dB ~ −12 dB
Gehörgerechte Lautstärkekorrektur (Lautstarke − 30 dB)	100 Hz, +8 dB
Tieftonfilter	30 Hz, −12 dB/oct
Hochtonfilter	8 kHz, −12 dB/oct
Stummabstimm	−20 dB
Ausgangsspannungen **PRE OUT Nominal**	1V
Maximal	8V
TAPE DECK 1, 2 REC OUT	150mV
TAPE DECK 1 REC/PLAY Aufnahme	30mV

ALLGEMEINE DATEN

Leistungsaufnahme	700W
Netzspannung umschaltbar	110/120/220/240V
Abmessungen (B x H x T)	450 x 173 x 352 mm
Gewicht	12.7kg

Technics

Matsushita Electric Trading Co., Ltd.
P.O. Box 288, Central Osaka Japan

■ LOCATION OF CONTROLS

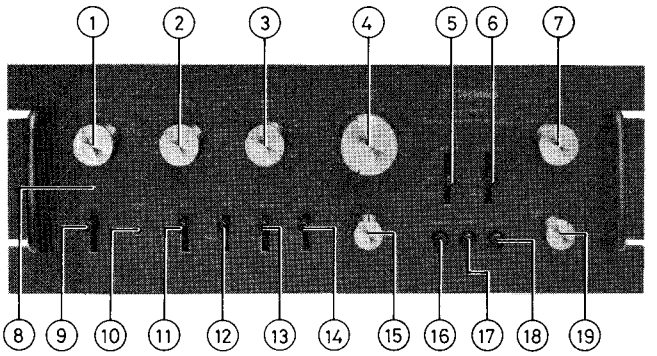

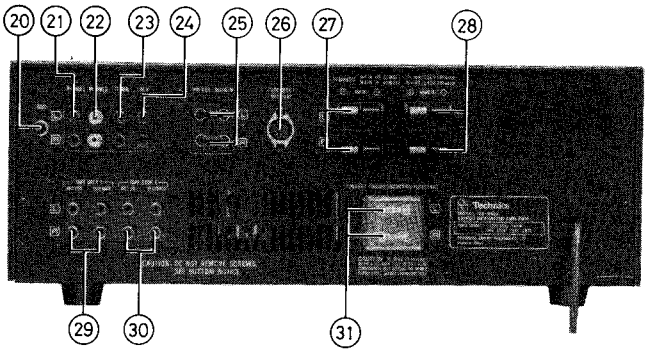

① SPEAKERS SELECTOR SWITCH
② BASS CONTROL
③ TREBLE CONTROL
④ VOLUME CONTROL
⑤ RECORDING MODE SWITCH
⑥ TAPE MONITOR SWITCH
⑦ INPUT SELECTOR SWITCH
⑧ POWER INDICATOR
⑨ POWER SWITCH
⑩ HEADPHONES JACK
⑪ BASS TURNOVER SWITCH
⑫ TONE DEFEAT SWITCH
⑬ TREBLE TURNOVER SWITCH
⑭ AUDIO MUTING SWITCH
⑮ BALANCE CONTROL
⑯ LOUDNESS SWITCH
⑰ LOW FILTER SWITCH
⑱ HIGH FILTER SWITCH
⑲ MODE SELECTOR SWITCH
⑳ GROUND TERMINAL
㉑ PHONO 1 INPUT TERMINALS
㉒ PHONO 2 INPUT TERMINALS
㉓ TUNER INPUT TERMINALS
㉔ AUX INPUT TERMINALS
㉕ PRE & MAIN AMPLIFIER CONNECTION PLUG
㉖ TAPE DECK 1 DIN SOCKET
㉗ MAIN SPEAKER TERMINALS
㉘ REMOTE SPEAKER TERMINALS
㉙ TAPE DECK 1 CONNECTION TERMINALS
㉚ TAPE DECK 2 CONNECTION TERMINALS
㉛ SPEAKER CIRCUIT PROTECTION FUSES

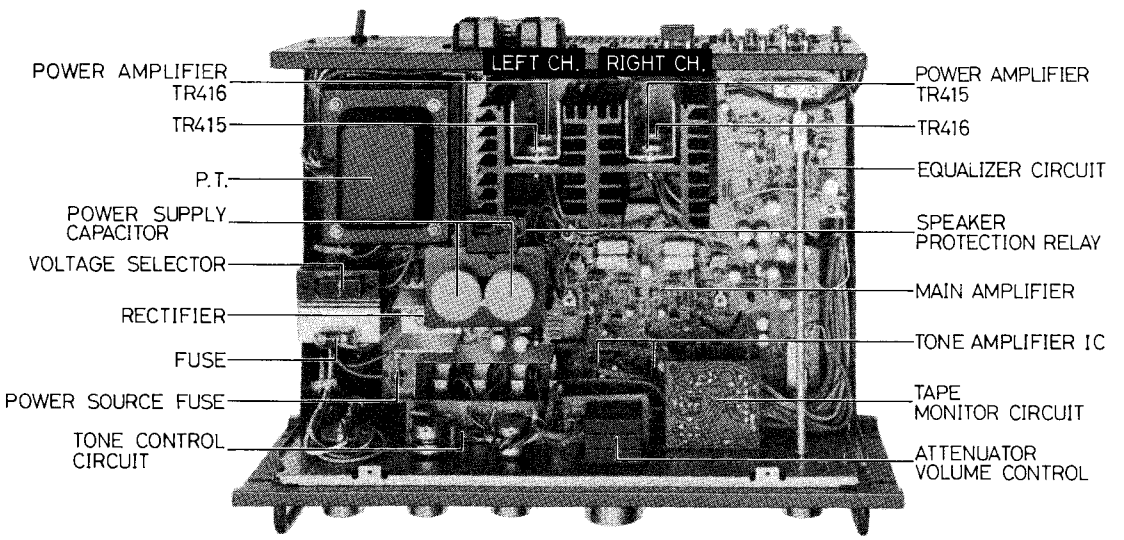

■ SERVICE AID

1. Block Diagram of I.C. (SVITA7136P)

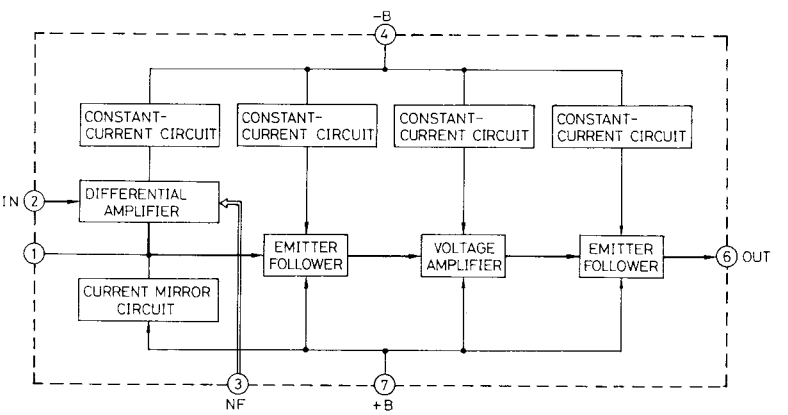

2. Features of the tone amplifier integrated circuit, SVITA7136P

The first stage utilizes an equivalent-load-resistance, large-current-mirror-circuit differential amplifier, and the output stage, with a constant-current-load emitter follower, is a low-distortion-factor, low-noise integrated circuit.

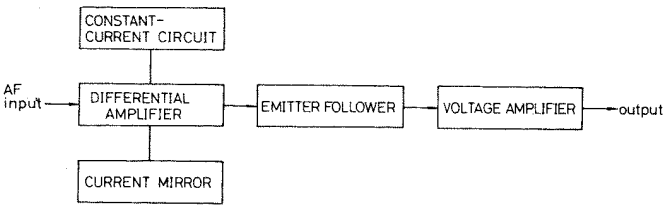

3. Current Mirror Circuit

Utilizing the circuit construction shown in figure 3, the current of the differential amplifier stage is maintained constant, and it is able to obtain a higher gain.

In the case of no signal, the bias of TR1 will change due to some influence, and if Ic1 increases, Ic2 of the differential amplifier will decrease. When Ic2 is decreased, the voltage drop across R2 will also decrease, and because the V_{BE} of TR3 is lowered as a result, Ic1 will decrease and Ic2 will increase. Therefore, a balance will be maintained between Ic1 and Ic2. Conversely, when Ic1 becomes reduced, the same balanced result will be obtained.

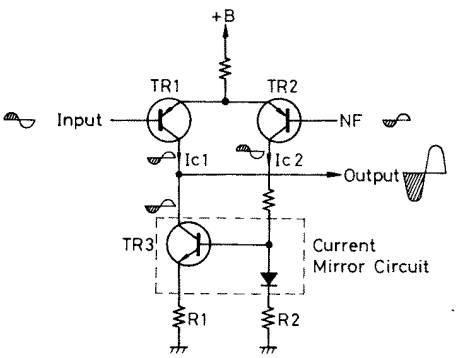

A constant current circuit can be considered as a circuit with a high impedance connected to a differential amplifier. Therefore, a high voltage gain can be obtained with this circuit. There is another reason why the high voltage gain can be obtained. In this circuit, TR1 and TR3 make up a push-pull connection, and when there is an input, a reverse-phase signal appears at the collector of TR1, and a signal which is identical in phase to the input can be obtained at the collector of TR2. This signal from the collector of TR2 is applied to TR3 resulting in a reverse-phase signal on the collector of TR3. Therefore, a push-pull circuit consisting of TR1 and TR3 is accomplished.

CAUTION

With this unit, a 15,000 μF electrolytic capacitor is used in the power source circuit. When servicing, please short-circuit and discharge this capacitor using a resistor of approximately 10 ohms with a power rating of more than 3 watts

■ ALIGNMENT INSTRUCTIONS

Notes:

1. Speaker switch to "off" position
2. Maintain line voltage at rated voltage
3. Volume control to minimum (∞) position
4. The "Ico" adjustment should be started about 5 minutes after setting the power switch to the "on" position.

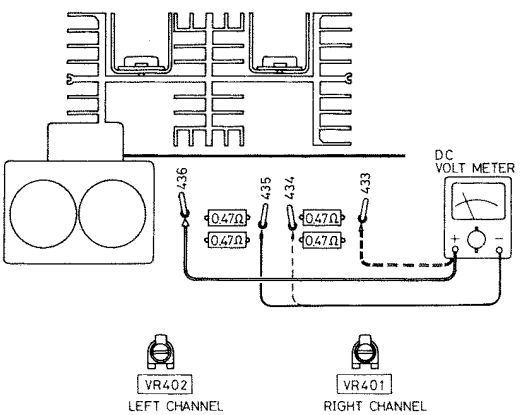

CHANNEL	DC VTVM CONNECTION POINT	ADJUSTMENT VOLUME	REMARKS
LEFT	Connect DC VTVM to No. 436 terminal (Positive side) and No. 435 terminal (Negative side).	VR402	Make adjustment so that the indication on DC VTVM becomes 10mV. (Left and Right channel)
RIGHT	Connect DC VTVM to No. 433 terminal (Positive side) and No. 434 terminal (Negative side).	VR401	

■ BLOCK DIAGRAM

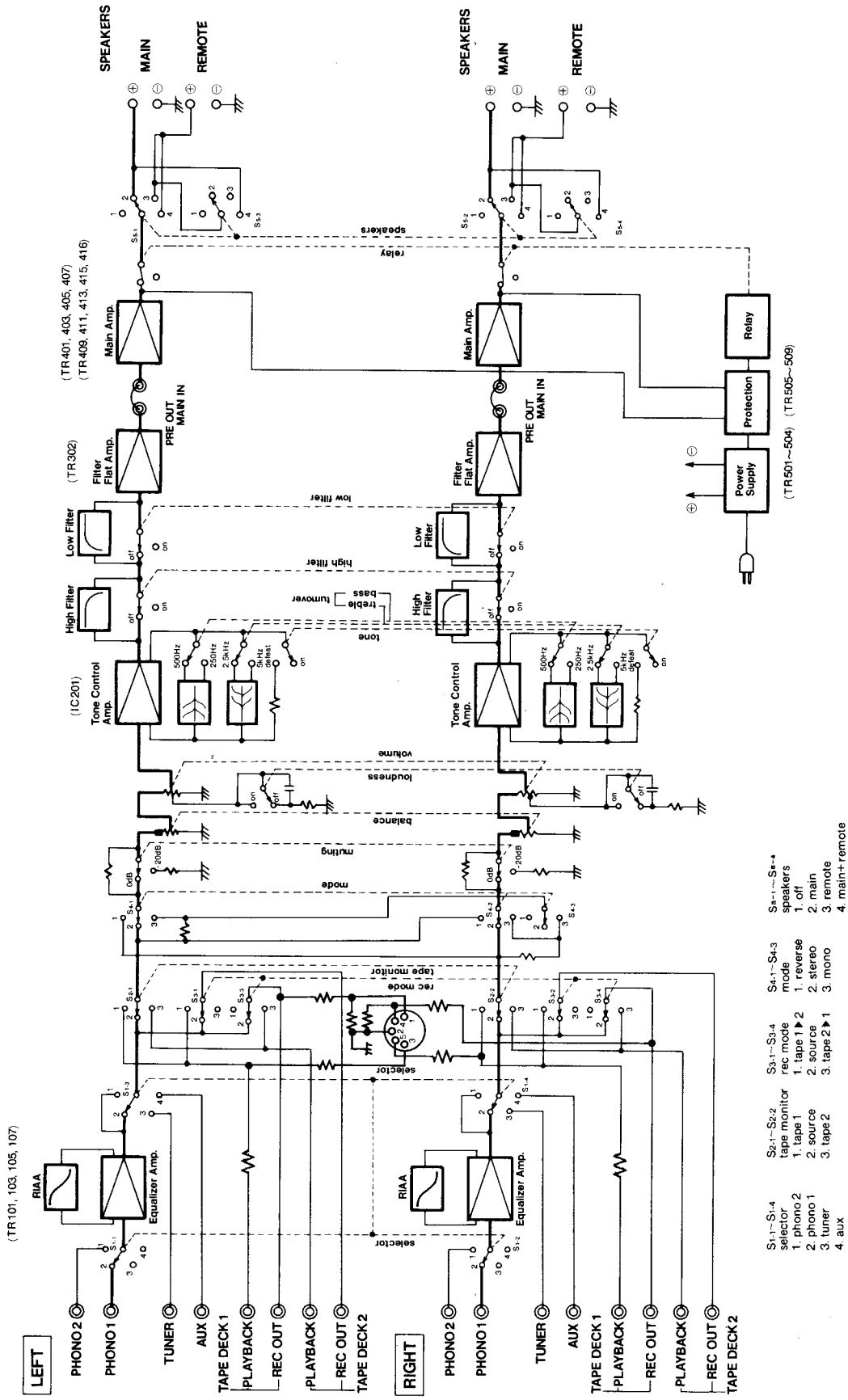

■ TO REMOVE POWER TRANSISTOR (TR415, TR416)

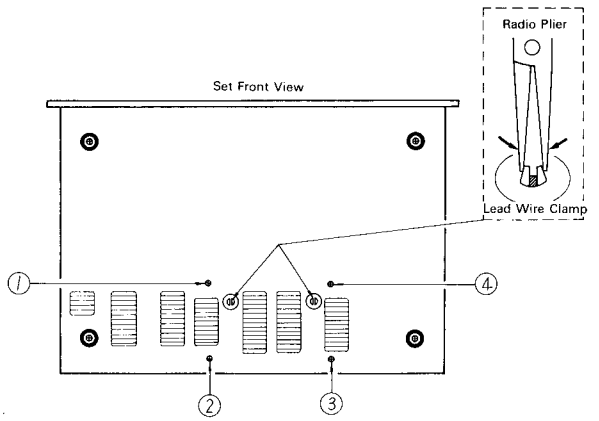

Fig. 1

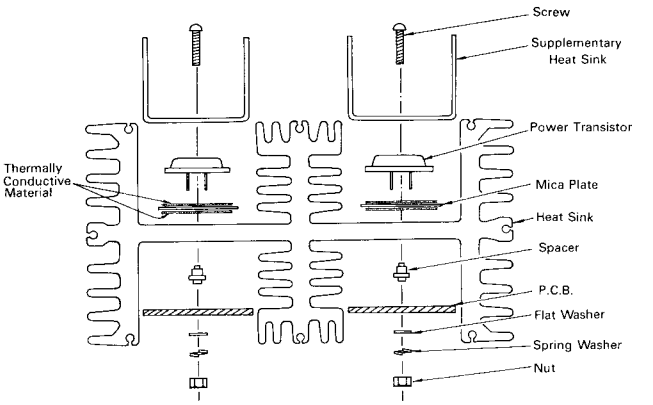

Fig. 2

1. Before servicing, turn the power source switch to the "OFF" position, and short-circuit and discharge the 15,000 μF capacitor using a resistor of approximately 10 ohms with a power rating of more than 3 watts.
2. From the underside of the unit, remove the lead wire clamps. Referring to figure 1, hold and push lead wire clamps inside the chassis using radio pliers.
3. Remove the installation screws for the heat sink [① ~ ④ of figure 1].
4. Remove the installation screws for the power transistors.
5. Unsolder the power transistors.
6. When installing, perform according to the order shown in figure 2. At this time, make certain that both sides of the mica plates are coated with a thermally conductive material (silicone grease or equivalent), and please do not forget to install the supplementary heat sinks.
7. Be sure that transistors TR407 and TR408, which are thermal compensation transistors, are making good contact with the heat sink in between the fins.

■ POWER SUPPLY SCHEMATIC DIAGRAM

- **Set for England [XE]**

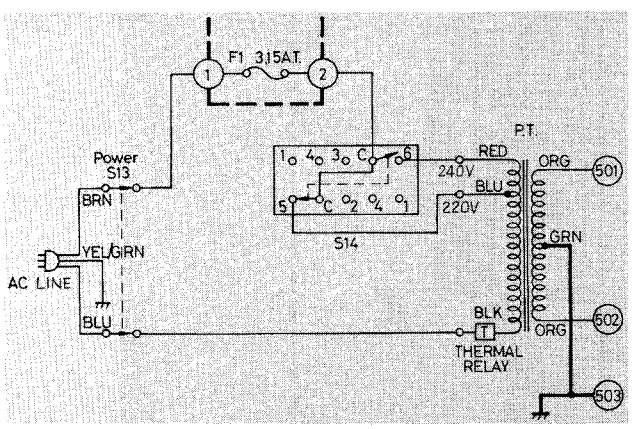

- **Set for Scandinavian [XSD] & Swiss [XSW]**

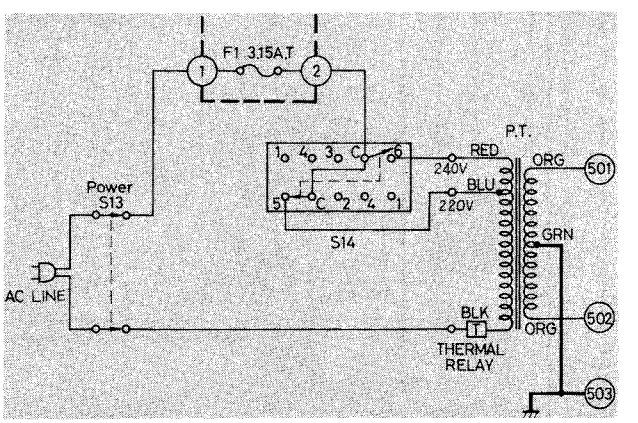

■ INPUT CIRCUIT & EQUALIZER AMPLIFIER CIRCUIT BOARD

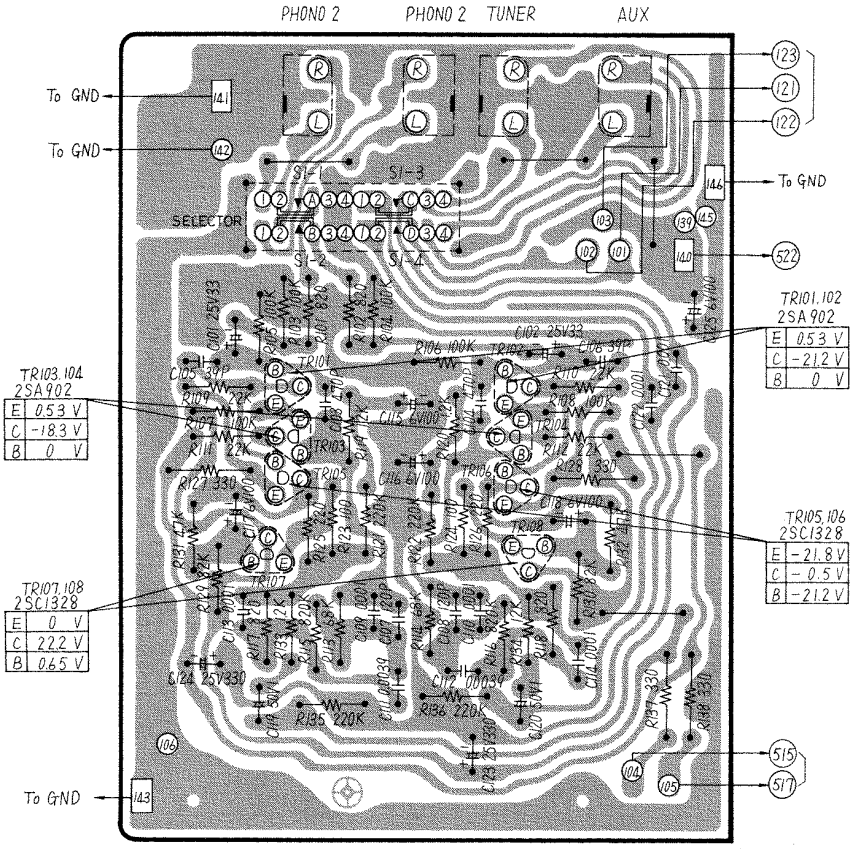

■ TAPE DECK CONNECTION TERMINAL

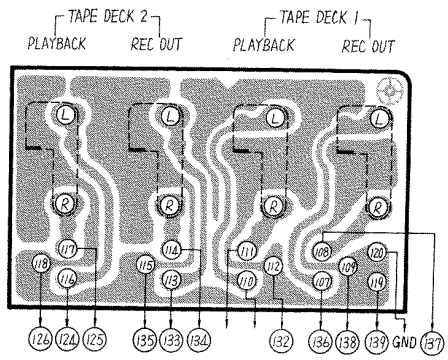

■ TAPE MONITOR SWITCH CIRCUIT BOARD

- **Set for Australia [XAL]**

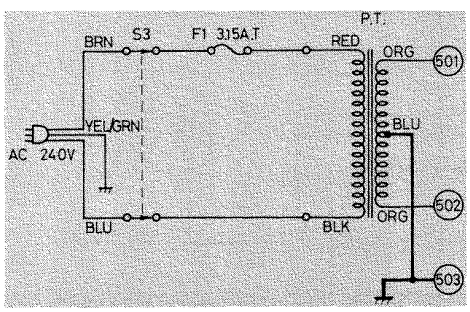

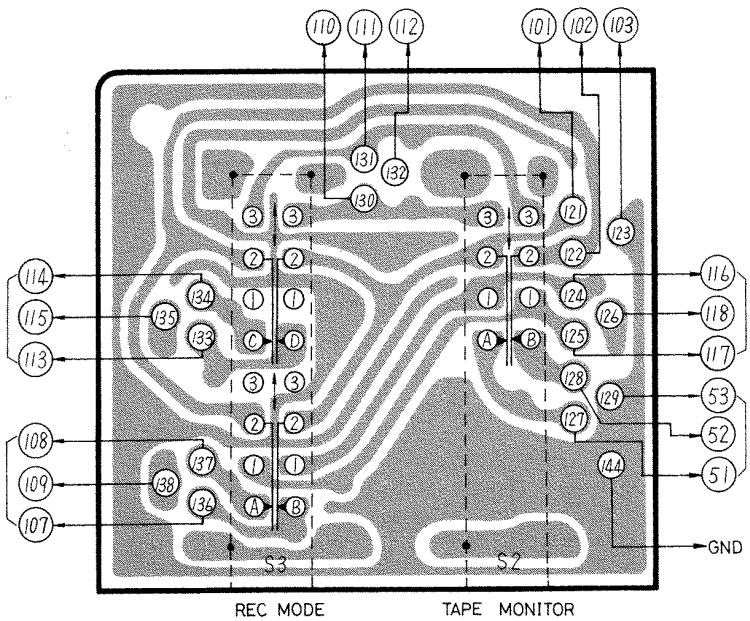

Schematic Diagram ..... Model SU-8600

(This schematic diagram may be modified at any time without notice.)

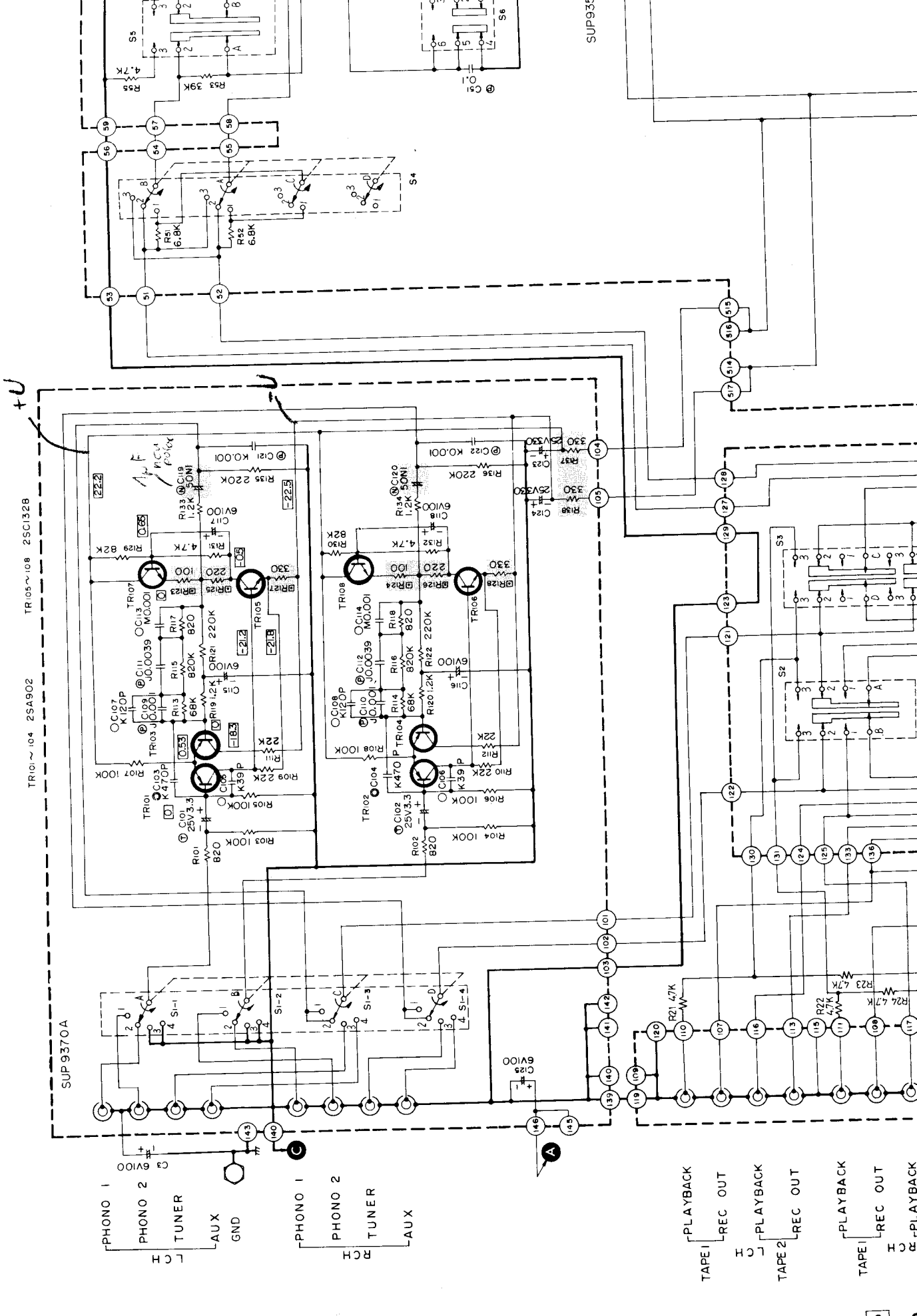

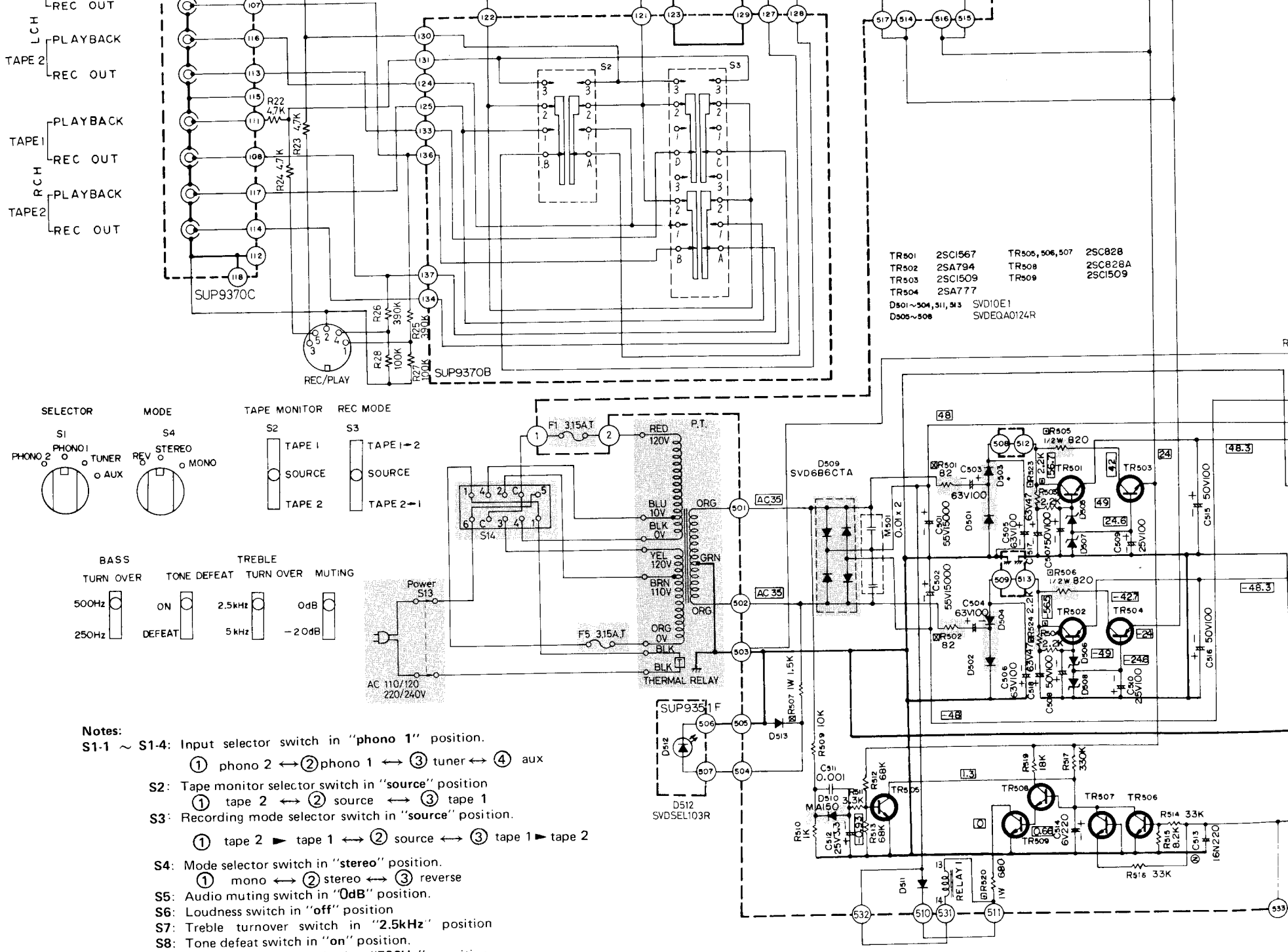

Notes:

S1-1 ~ S1-4: Input selector switch in "**phono 1**" position.
① phono 2 ↔ ② phono 1 ↔ ③ tuner ↔ ④ aux

S2: Tape monitor selector switch in "**source**" position
① tape 2 ↔ ② source ↔ ③ tape 1

S3: Recording mode selector switch in "**source**" position.
① tape 2 ► tape 1 ↔ ② source ↔ ③ tape 1 ► tape 2

S4: Mode selector switch in "**stereo**" position.
① mono ↔ ② stereo ↔ ③ reverse

S5: Audio muting switch in "**0dB**" position.
S6: Loudness switch in "**off**" position
S7: Treble turnover switch in "**2.5kHz**" position
S8: Tone defeat switch in "**on**" position.
S9: Bass turnover switch in "**500Hz**" position.
S10: High-filter switch in "**off**" position
S11: Low-filter switch in "**off**" position
S12-1, S12-2: Speaker selector switch in "**off**" position.
off ↔ main ↔ remote ↔ main + remote

S13: Power switch in "**on**" position
S14: Voltage selector switch (110↔120↔220↔240V).

- DC voltage measurements are taken with DC VTVM from chassis ground.

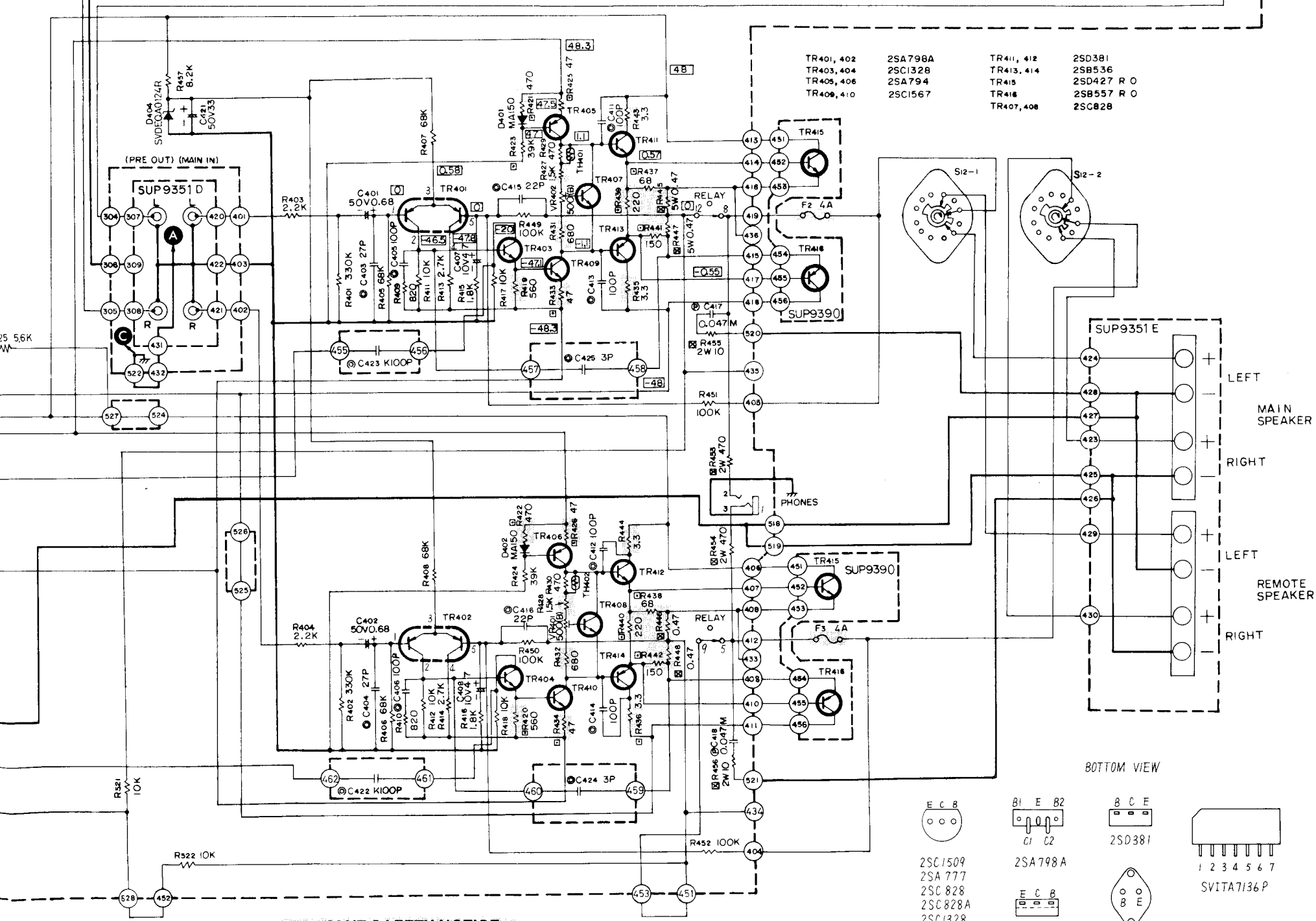

IMPORTANT SAFETY NOTICE

THE SHADED AREA ON THIS SCHEMATIC DIAGRAM INCORPORATES SPECIAL FEATURES IMPORTANT FOR SAFETY.

WHEN SERVICING IT IS ESSENTIAL THAT ONLY MANUFACTUR'S SPECIFIED PARTS BE USED FOR THE CRITICAL COMPONENTS IN THE SHADED AREAS OF THE SCHEMATIC.

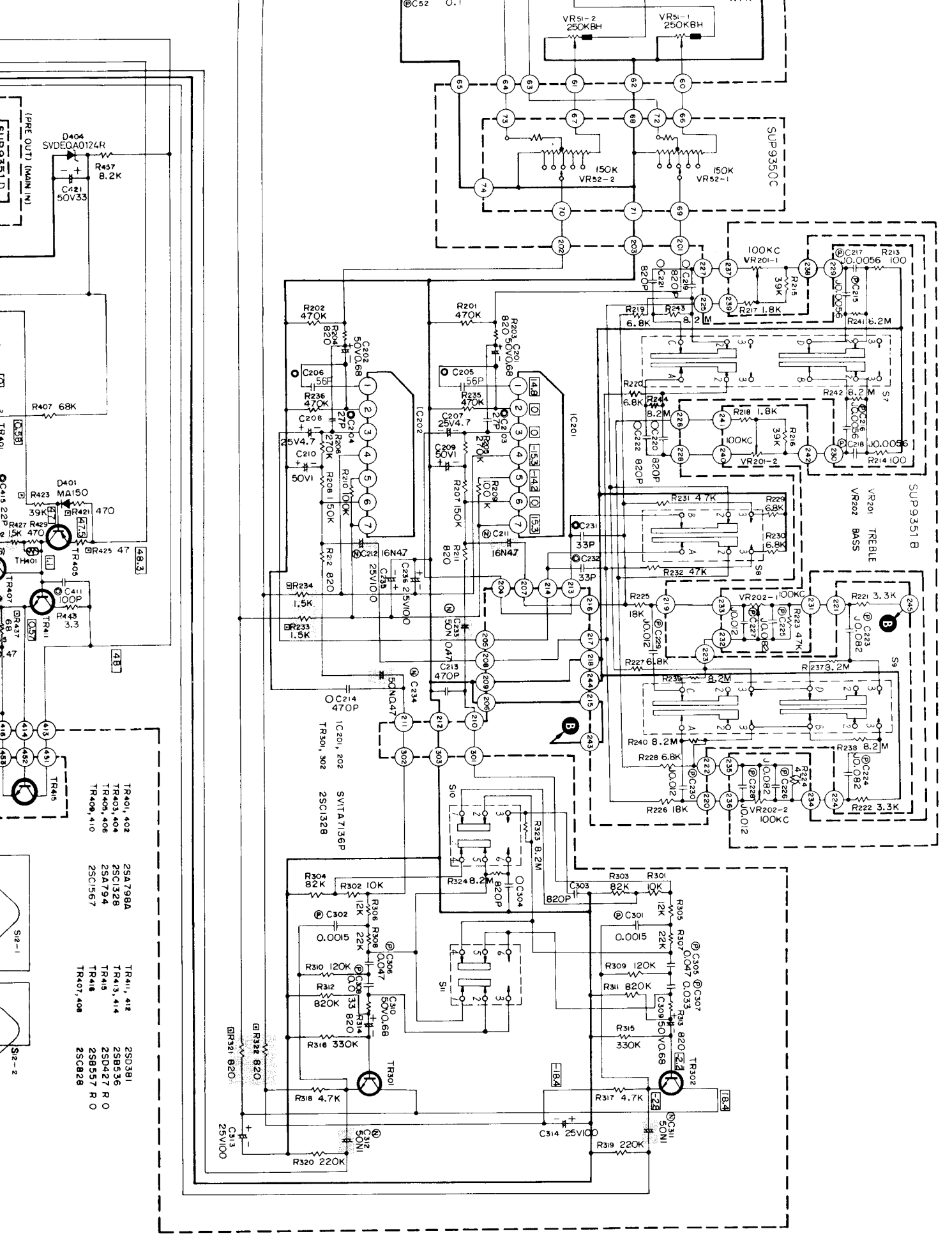

with the development of new technology).

■ MAIN AMPLIFIER, TONE CONTROL & POWER SUPPLY CIRCUIT BOARD

● Right Channel Power Transistor

● Left Channel P

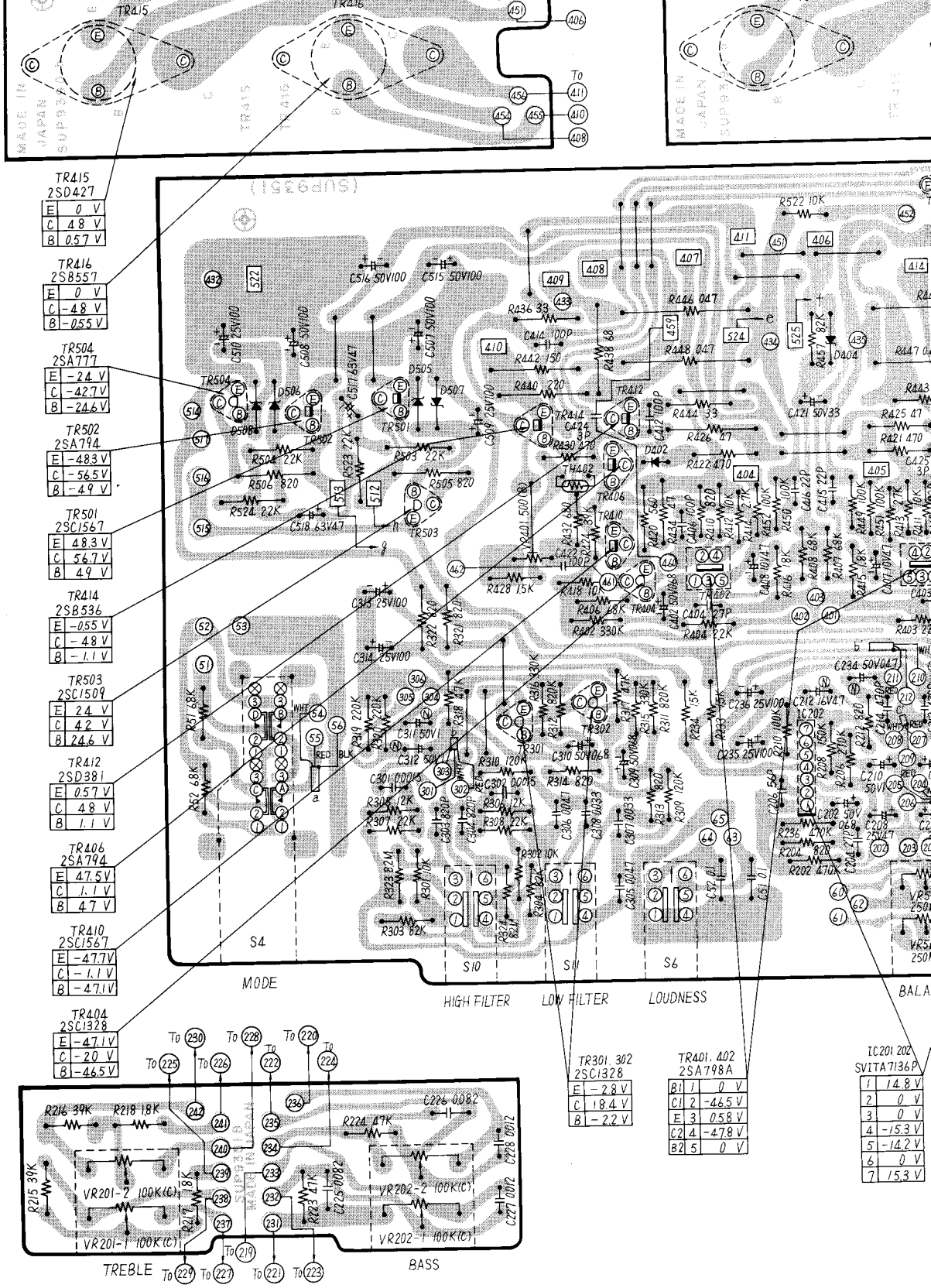

● Tone Control

annel Power Transistor

● Power Indicator

● Main Amp & Pre Amp Connection Terminal

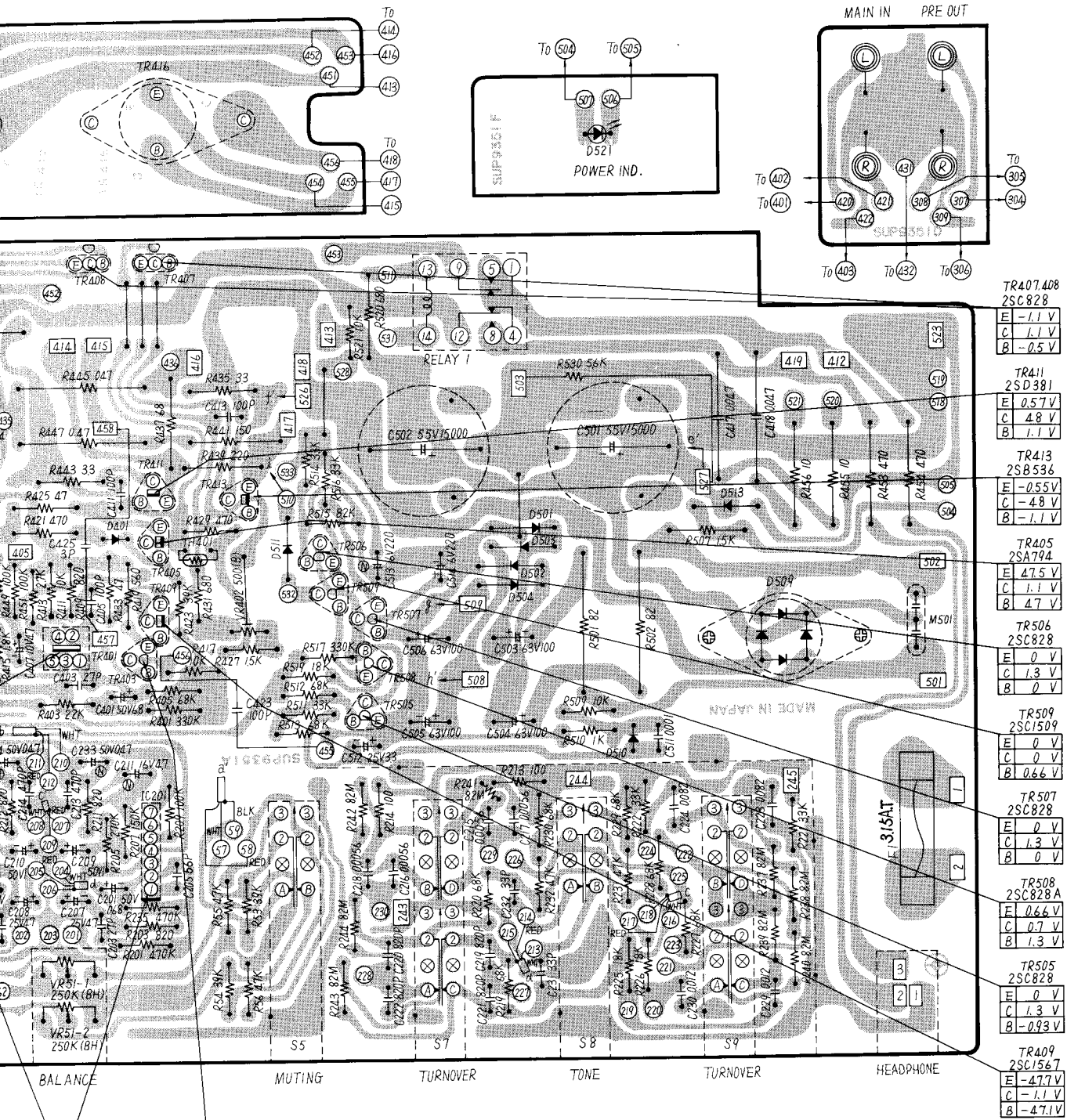

● Volume Control

● Speaker Terminal

■ REPLACEMENT PARTS LIST

Important Safety Notice
Components identified by shaded area have special characteristics important for safety.
When replacing any of these components use only manufacturer's specified parts.

NOTE: 1. Part numbers are indicated on most mechanical parts.
Please use this part number for parts orders.

Ref. No.	Part No.	Part Name & Description	Per Set		Remarks
		INTEGRATED CIRCUITS			
IC201, 202	SVITA7136P	Tone Amplifier	2		
		TRANSISTORS			
TR101, 102, 103 104	**2SA902-F**	Differential Equalizer Amplifier (in ranks F or R)	4		
TR105,106,107, 108,301,302, 403,404,505, 506,507,508	**2SC1328-T**	Equalizer, Filter, Drive Amplifier & Protection Relay Switching (in ranks T or S)	12		
TR401,402	2SA798A-G2	Differential AF Amplifier (ranks F2 or G2)	2		
TR405,406,502	**2SA794-Q**	Pre Drive Amplifier & Regulator (P,Q or R)	3		
TR407,408	**2SC828A-R**	Thermal Compensation	2		
TR409,410,501	**2SC1567-Q**	Pre Drive Amplifier & Regulator (P,Q or R)	3		
TR411,412	2SD381-L	Drive Amplifier } Use in pair ranks	2		
TR413,414	2SB536-L	Drive Amplifier } (L or M)	2		
TR415 (X2) [X,XG,XGH, XAL]	2SD427-O	Power Amplifier Set for [X], [XG] [XGH] & [XAL] } Use in pair ranks	2		
TR416 (X2) [X, XG,XGH, XAL]	2SB557-Q	Power Amplifier Set for [X], [XG], [XGH] & [XAL] } (R or O)	2		
TR415 (X2) [XSD,XSW,XE]	2SD555-Q	Power Amplifier Set for [XSD], [XSW] & [XE] } Use in pair ranks	2		
TR416 (X2) [XSD,XSW,XE]	2SB600-Q	Power Amplifier Set for [XSD], [XSW], & [XE] } (Q or R)	2		
TR503,509	**2SC1509F-Q**	Voltage Regulator & Relay Driver	2		
TR504	**2SA777-Q**	Voltage Regulator (in ranks Q or R)	1		
		DIODES			
D401,402,510	MA150	Bias Control & Rectifier	3		
D404,505,506, 507,508	SVDEQA0124R	24V Zener	5		
D501,502,503, 504,511,513	SVD10E1	Rectifier	6		
D509	SVD6B6CTA-2	Rectifier	1		
D512	SVDSEL103R	Power Indicator, LED	1		
		TRANSFORMERS			
T1 [X,XG,XGH]	SLT5R13	Power Transformer, Set for [X], [XG] & [XGH]	1		O
T1 [XSD,XSW, XE]	SLT5R11	Power Transformer, Set for [XSD],[XSW] & [XE]	1		O
T1 [XAL]	SLT5R15	Power Transformer, Set for [XAL]	1		O
		THERMISTORS			
TH401,402	RRT251	Thermistor, Driver Circuit	2		

Ref. No.	Part No.	Part Name & Description	Per Set		Remarks
		RESISTORS			
R21	**ERD25TJ472**	4.7kΩ, 1/4W, ±5%, Carbon	1		
R22	**ERD25TJ472**	4.7kΩ, 1/4W, ±5%, Carbon	1		
R23	**ERD25TJ472**	4.7kΩ, 1/4W, ±5%, Carbon	1		
R24	**ERD25TJ472**	4.7kΩ, 1/4W, ±5%, Carbon	1		
R25	**ERD25TJ394**	390kΩ, 1/4W, ±5%, Carbon	1		
R26	**ERD25TJ394**	390kΩ, 1/4W, ±5%, Carbon	1		
R27	**ERD25TJ104**	100kΩ, 1/4W, ±5%, Carbon	1		
R28	**ERD25TJ104**	100kΩ, 1/4W, ±5%, Carbon	1		
R51	**ERD25TJ682**	6.8kΩ, 1/4W, ±5%, Carbon	1		
R52	**ERD25TJ682**	6.8kΩ, 1/4W, ±5%, Carbon	1		
R53	**ERD25TJ393**	39kΩ, 1/4W, ±5%, Carbon	1		
R54	**ERD25TJ393**	39kΩ, 1/4W, ±5%, Carbon	1		
R55	**ERD25TJ472**	4.7kΩ, 1/4W, ±5%, Carbon	1		
R56	**ERD25TJ472**	4.7kΩ, 1/4W, ±5%, Carbon	1		
R101	**ERD25TJ821**	820Ω, 1/4W, ±5%, Carbon	1		
R102	**ERD25TJ821**	820Ω, 1/4W, ±5%, Carbon	1		
R103	ERD18TSJ104	100kΩ, 1/8W, ±5%, Carbon	1		
R104	ERD18TSJ104	100kΩ, 1/8W, ±5%, Carbon	1		
R105	ERD18TSJ104	100kΩ, 1/8W, ±5%, Carbon	1		
R106	ERD18TSJ104	100kΩ, 1/8W, ±5%, Carbon	1		
R107	ERD18TSJ104	100kΩ, 1/8W, ±5%, Carbon	1		
R108	ERD18TSJ104	100kΩ, 1/8W, ±5%, Carbon	1		
R109	**ERD25TJ223**	22kΩ, 1/4W, ±5%, Carbon	1		
R110	**ERD25TJ223**	22kΩ, 1/4W, ±5%, Carbon	1		
R111	**ERD25TJ223**	22kΩ, 1/4W, ±5%, Carbon	1		
R112	**ERD25TJ223**	22kΩ, 1/4W, ±5%, Carbon	1		
R113	**ERD25TJ683**	68kΩ, 1/4W, ±5%, Carbon	1		
R114	**ERD25TJ683**	68kΩ, 1/4W, ±5%, Carbon	1		
R115	**ERD25TJ824**	820kΩ, 1/4W, ±5%, Carbon	1		
R116	**ERD25TJ824**	820kΩ, 1/4W, ±5%, Carbon	1		
R117	**ERD25TJ821**	820Ω, 1/4W, ±5%, Carbon	1		
R118	**ERD25TJ821**	820Ω, 1/4W, ±5%, Carbon	1		
R119	**ERD25TJ122**	1.2kΩ, 1/4W, ±5%, Carbon	1		
R120	**ERD25TJ122**	1.2kΩ, 1/4W, ±5%, Carbon	1		
R121	**ERD25TJ224**	220kΩ, 1/4W, ±5%, Carbon	1		
R122	**ERD25TJ224**	220kΩ, 1/4W, ±5%, Carbon	1		
R123	**ERD14FJ101**	100Ω, 1/4W, ±5%, Carbon	1		
R124	**ERD14FJ101**	100Ω, 1/4W, ±5%, Carbon	1		
R125	**ERD14FJ221**	220Ω, 1/4W, ±5%, Carbon	1		
R126	**ERD14FJ221**	220Ω, 1/4W, ±5%, Carbon	1		
R127	**ERD14FJ331**	330Ω, 1/4W, ±5%, Carbon	1		
R128	**ERD14FJ331**	330Ω, 1/4W, ±5%, Carbon	1		
R129	**ERD25TJ823**	82kΩ, 1/4W, ±5%, Carbon	1		
R130	**ERD25TJ823**	82kΩ, 1/4W, ±5%, Carbon	1		
R131	**ERD25TJ472**	4.7kΩ, 1/4W, ±5%, Carbon	1		
R132	**ERD25TJ472**	4.7kΩ, 1/4W, ±5%, Carbon	1		
R133	**ERD25TJ122**	1.2kΩ, 1/4W, ±5%, Carbon	1		
R134	**ERD25TJ122**	1.2kΩ, 1/4W, ±5%, Carbon	1		
R135	**ERD25TJ224**	220kΩ, 1/4W, ±5%, Carbon	1		
R136	**ERD25TJ224**	220kΩ, 1/4W, ±5%, Carbon	1		
R137	**ERD14FJ331**	330Ω, 1/4W, ±5%, Carbon	1		
R138	**ERD14FJ331**	330Ω, 1/4W, ±5%, Carbon	1		
R201	ERD18TSJ474	470kΩ, 1/8W, ±5%, Carbon	1		
R202	ERD18TSJ474	470kΩ, 1/8W, ±5%, Carbon	1		
R203	**ERD25TJ821**	820Ω, 1/4W, ±5%, Carbon	1		
R204	**ERD25TJ821**	820Ω, 1/4W, ±5%, Carbon	1		

Ref. No.	Part No.	Part Name & Description	Per Set	Remarks
R205	**ERD25TJ274**	270kΩ, 1/4W, ±5%, Carbon	1	
R206	**ERD25TJ274**	270kΩ, 1/4W, ±5%, Carbon	1	
R207	**ERD25TJ154**	150kΩ, 1/4W, ±5%, Carbon	1	
R208	**ERD25TJ154**	150kΩ, 1/4W, ±5%, Carbon	1	
R209	**ERD25TJ104**	100kΩ, 1/4W, ±5%, Carbon	1	
R210	**ERD25TJ104**	100kΩ, 1/4W, ±5%, Carbon	1	
R211	**ERD25TJ821**	820Ω, 1/4W, ±5%, Carbon	1	
R212	**ERD25TJ821**	820Ω, 1/4W, ±5%, Carbon	1	
R213	**ERD25TJ101**	100Ω, 1/4W, ±5%, Carbon	1	
R214	**ERD25TJ101**	100Ω, 1/4W, ±5%, Carbon	1	
R215	**ERD25TJ393**	39kΩ, 1/4W, ±5%, Carbon	1	
R216	**ERD25TJ393**	39kΩ, 1/4W, ±5%, Carbon	1	
R217	**ERD25TJ182**	1.8kΩ, 1/4W, ±5%, Carbon	1	
R218	**ERD25TJ182**	1.8kΩ, 1/4W, ±5%, Carbon	1	
R219	**ERD25TJ682**	6.8kΩ, 1/4W, ±5%, Carbon	1	
R220	**ERD25TJ682**	6.8kΩ, 1/4W, ±5%, Carbon	1	
R221	**ERD25TJ332**	3.3kΩ, 1/4W, ±5%, Carbon	1	
R222	**ERD25TJ332**	3.3kΩ, 1/4W, ±5%, Carbon	1	
R223	**ERD25TJ473**	47kΩ, 1/4W, ±5%, Carbon	1	
R224	**ERD25TJ473**	47kΩ, 1/4W, ±5%, Carbon	1	
R225	**ERD25TJ183**	18kΩ, 1/4W, ±5%, Carbon	1	
R226	**ERD25TJ183**	18kΩ, 1/4W, ±5%, Carbon	1	
R227	**ERD25TJ682**	6.8kΩ, 1/4W, ±5%, Carbon	1	
R228	**ERD25TJ682**	6.8kΩ, 1/4W, ±5%, Carbon	1	
R229	**ERD25TJ682**	6.8kΩ, 1/4W, ±5%, Carbon	1	
R230	**ERD25TJ682**	6.8kΩ, 1/4W, ±5%, Carbon	1	
R231	**ERD25TJ473**	47kΩ, 1/4W, ±5%, Carbon	1	
R232	**ERD25TJ473**	47kΩ, 1/4W, ±5%, Carbon	1	
R233	**ERD14FJ152**	1.5kΩ, 1/4W, ±5%, Carbon	1	
R234	**ERD14FJ152**	1.5kΩ, 1/4W, ±5%, Carbon	1	
R235	ERD18TSJ474	470kΩ, 1/8W, ±5%, Carbon	1	
R236	ERD18TSJ474	470kΩ, 1/8W, ±5%, Carbon	1	
R237	ERC14GK825	8.2MΩ, 1/4W, ±10%, Solid	1	
R238	ERC14GK825	8.2MΩ, 1/4W, ±10%, Solid	1	
R239	ERC14GK825	8.2MΩ, 1/4W, ±10%, Solid	1	
R240	ERC14GK825	8.2MΩ, 1/4W, ±10%, Solid	1	
R241	ERC14GK825	8.2MΩ, 1/4W, ±10%, Solid	1	
R242	ERC14GK825	8.2MΩ, 1/4W, ±10%, Solid	1	
R243	ERC14GK825	8.2MΩ, 1/4W, ±10%, Solid	1	
R244	ERC14GK825	8.2MΩ, 1/4W, ±10%, Solid	1	
R301	**ERD25TJ103**	10kΩ, 1/4W, ±5%, Carbon	1	
R302	**ERD25TJ103**	10kΩ, 1/4W, ±5%, Carbon	1	
R303	**ERD25TJ823**	82kΩ, 1/4W, ±5%, Carbon	1	
R304	**ERD25TJ823**	82kΩ, 1/4W, ±5%, Carbon	1	
R305	**ERD25TJ123**	12kΩ, 1/4W, ±5%, Carbon	1	
R306	**ERD25TJ123**	12kΩ, 1/4W, ±5%, Carbon	1	
R307	**ERD25TJ223**	22kΩ, 1/4W, ±5%, Carbon	1	
R308	**ERD25TJ223**	22kΩ, 1/4W, ±5%, Carbon	1	
R309	**ERD25TJ124**	120kΩ, 1/4W, ±5%, Carbon	1	
R310	**ERD25TJ124**	120kΩ, 1/4W, ±5%, Carbon	1	
R311	**ERD25TJ824**	820kΩ, 1/4W, ±5%, Carbon	1	
R312	**ERD25TJ824**	820kΩ, 1/4W, ±5%, Carbon	1	
R313	**ERD25TJ821**	820Ω, 1/4W, ±5%, Carbon	1	
R314	**ERD25TJ821**	820Ω, 1/4W, ±5%, Carbon	1	
R315	**ERD25TJ334**	330kΩ, 1/4W, ±5%, Carbon	1	
R316	**ERD25TJ334**	330kΩ, 1/4W, ±5%, Carbon	1	
R317	**ERD25TJ472**	4.7kΩ, 1/4W, ±5%, Carbon	1	
R318	**ERD25TJ472**	4.7kΩ, 1/4W, ±5%, Carbon	1	
R319	**ERD25TJ224**	220kΩ, 1/4W, ±5%, Carbon	1	
R320	**ERD25TJ224**	220kΩ, 1/4W, ±5%, Carbon	1	

Ref. No.	Part No.	Part Name & Description	Per Set	Remarks
R321	**ERD14FJ821**	820Ω, 1/4W, ± 5%, Carbon	1	
R322	**ERD14FJ821**	820Ω, 1/4W, ± 5%, Carbon	1	
R323	ERC14GK825	8.2MΩ, 1/4W, ±10%, Solid	1	
R324	ERC14GK825	8.2MΩ, 1/4W, ±10%, Solid	1	
R401	**ERD25TJ334**	330kΩ, 1/4W, ± 5%, Carbon	1	
R402	**ERD25TJ334**	330kΩ, 1/4W, ± 5%, Carbon	1	
R403	**ERD25TJ222**	2.2kΩ, 1/4W, ± 5%, Carbon	1	
R404	**ERD25TJ222**	2.2kΩ, 1/4W, ± 5%, Carbon	1	
R405	**ERD25TJ683**	68kΩ, 1/4W, ± 5%, Carbon	1	
R406	**ERD25TJ683**	68kΩ, 1/4W, ± 5%, Carbon	1	
R407	**ERD25TJ683**	68kΩ, 1/4W, ± 5%, Carbon	1	
R408	**ERD25TJ683**	68kΩ, 1/4W, ± 5%, Carbon	1	
R409	**ERD25TJ821**	820Ω, 1/4W, ± 5%, Carbon	1	
R410	**ERD25TJ821**	820Ω, 1/4W, ± 5%, Carbon	1	
R411	**ERD25TJ103**	10kΩ, 1/4W, ± 5%, Carbon	1	
R412	**ERD25TJ103**	10kΩ, 1/4W, ± 5%, Carbon	1	
R413	**ERD25TJ272**	2.7kΩ, 1/4W, ± 5%, Carbon	1	
R414	**ERD25TJ272**	2.7kΩ, 1/4W, ± 5%, Carbon	1	
R415	**ERD25TJ182**	1.8kΩ, 1/4W, ± 5%, Carbon	1	
R416	**ERD25TJ182**	1.8kΩ, 1/4W, ± 5%, Carbon	1	
R417	**BRD25TJ103**	10kΩ, 1/4W, ± 5%, Carbon	1	
R418	**ERD25TJ103**	10kΩ, 1/4W, ± 5%, Carbon	1	
R419	**ERD14FJ561**	560Ω, 1/4W, ± 5%, Carbon	1	
R420	**ERD14FJ561**	560Ω, 1/4W, ± 5%, Carbon	1	
R421	**ERD14FJ471**	470Ω, 1/4W, ± 5%, Carbon	1	
R422	**ERD14FJ471**	470Ω, 1/4W, ± 5%, Carbon	1	
R423	**ERD25TJ393**	39kΩ, 1/4W, ± 5%, Carbon	1	
R424	**ERD25TJ393**	39kΩ, 1/4W, ± 5%, Carbon	1	
R425	**ERD14FJ470**	47Ω, 1/4W, ± 5%, Carbon	1	
R426	**ERD14FJ470**	47Ω, 1/4W, ± 5%, Carbon	1	
R427	**ERD18FJ152**	1.5kΩ, 1/8W, ± 5%, Carbon	1	
R428	**ERD18FJ152**	1.5kΩ, 1/8W, ± 5%, Carbon	1	
R429	**ERD25TJ471**	470Ω, 1/4W, ± 5%, Carbon	1	
R430	**ERD25TJ471**	470Ω, 1/4W, ± 5%, Carbon	1	
R431	**ERD14FJ681**	680Ω, 1/4W, ± 5%, Carbon	1	
R432	**ERD14FJ681**	680Ω, 1/4W, ± 5%, Carbon	1	
R433	**ERD14FJ470**	47Ω, 1/4W, ± 5%, Carbon	1	
R434	**ERD14FJ470**	47Ω, 1/4W, ± 5%, Carbon	1	
R435	**ERD14FJ3R3**	3.3Ω, 1/4W, ± 5%, Carbon	1	
R436	**ERD14FJ3R3**	3.3Ω, 1/4W, ± 5%, Carbon	1	
R437	ERQ12HJ680	68Ω, 1/2W, ± 5%, Fuse Type-Matallic	1	○
R438	ERQ12HJ680	68Ω, 1/2W, ± 5%, Fuse Type-Matallic	1	○
R439	ERQ12HJ221	220Ω, 1/2W, ± 5%, Fuse Type-Matallic	1	○
R440	ERQ12HJ221	220Ω, 1/2W, ± 5%, Fuse Type-Matallic	1	○
R441	ERQ12HJ151	150Ω, 1/2W, ± 5%, Fuse Type-Matallic	1	○
R442	ERQ12HJ151	150Ω, 1/2W, ± 5%, Fuse Type-Matallic	1	○
R443	**ERD14FJ3R3**	3.3Ω, 1/4W, ± 5%, Carbon	1	
R444	**ERD14FJ3R3**	3.3Ω, 1/4W, ± 5%, Carbon	1	
R445	ERF5AKR47	0.47Ω, 5W, ±10%, Non-Flammable	1	
R446	ERF5AKR47	0.47Ω, 5W, ±10%, Non-Flammable	1	
R447	ERF5AKR47	0.47Ω, 5W, ±10%, Non-Flammable	1	
R448	ERF5AKR47	0.47Ω, 5W, ±10%, Non-Flammable	1	
R449	**ERD25TJ104**	100kΩ, 1/4W, ± 5%, Carbon	1	
R450	**ERD25TJ104**	100kΩ, 1/4W, ± 5% Carbon	1	
R451	**ERD25TJ104**	100kΩ, 1/4W, ± 5%, Carbon	1	
R452	**ERD25TJ104**	100kΩ, 1/4W, ± 5%, Carbon	1	
R453	**ERG2ANJ471**	470Ω, 2W, ± 5%, Metallic	1	
R454	**ERG2ANJ471**	470Ω, 2W, ± 5%, Metallic	1	
R455	**REG2ANJ100**	10Ω, 2W, ± 5%, Metallic	1	
R456	**ERG2ANJ100**	10Ω, 2W, ± 5%, Metallic	1	

Ref. No.	Part No.	Part Name & Description	Per Set		Remarks
R457	**ERD25TJ822**	8.2kΩ, 1/4W, ± 5%, Carbon	1		
R501	ERQ3CJ820	82Ω, 3W, ± 5%, Fuse Type-Metallic	1		O
R502	ERQ3CJ820	82Ω, 3W, ± 5%, Fuse Type-Metallic	1		O
R503	**ERD14FJ222**	2.2kΩ, 1/4W, ± 5%, Carbon	1		
R504	**ERD14FJ222**	2.2kΩ, 1/4W, ± 5%, Carbon	1		
R505	**ERD12FJ821**	820Ω, 1/2W, ± 5%, Carbon	1		
R506	**ERD12FJ821**	820Ω, 1/2W, ± 5%, Carbon	1		
R507	**ERG1ANJ152**	1.5kΩ, 1W, ± 5%, Metallic	1		
R508	**ERG1ANJ152**	1.5kΩ, 1W, ± 5%, Metallic	1		
R509	**ERD25TJ103**	10kΩ, 1/4W, ± 5%, Carbon	1		
R510	**ERD25TJ103**	10kΩ, 1/4W, ± 5%, Carbon	1		
R511	**ERD25TJ332**	3.3kΩ, 1/4W, ± 5%, Carbon	1		
R512	**ERD25TJ683**	68kΩ, 1/4W, ± 5%, Carbon	1		
R513	**ERD25TJ683**	68kΩ, 1/4W, ± 5%, Carbon	1		
R514	**ERD25TJ333**	33kΩ, 1/4W, ± 5%, Carbon	1		
R515	**ERD25TJ822**	8.2kΩ, 1/4W, ± 5%, Carbon	1		
R516	**ERD25TJ333**	33kΩ, 1/4W, ± 5%, Carbon	1		
R517	**ERD25TJ334**	330kΩ, 1/4W, ± 5%, Carbon	1		
R519	**ERD25TJ183**	18kΩ, 1/4W, ± 5%, Carbon	1		
R520	**ERG1ANJ681**	680Ω, 1W, ± 5%, Metallic	1		
R521	**ERD25TJ103**	10kΩ, 1/4W, ± 5%, Carbon	1		
R522	**ERD25TJ103**	10kΩ, 1/4W, ± 5%, Carbon	1		
R523	**ERD14FJ222**	2.2kΩ, 1/4W, ± 5%, Carbon	1		
R524	**ERD14FJ222**	2.2kΩ, 1/4W, ± 5%, Carbon	1		
R525	**ERG2ANJ562**	5.6kΩ, 2W, ± 5%, Metallic	1		
		VARIABLE RESISTORS			
VR52	EWCF2AF30ATC	150kΩ, Volume Control (Attenuator)	1		O
VR51	EVK2CA031252	250kΩ (BH), Balance Control	1		
VR201,202	EWF0WA038C15	100kΩ (C) Bass & Treble Control	2		
VR401,402	EVLS3AA00B52	500Ω (B) Icq Adjustment	2		
		CAPACITORS			
C3	**ECEA10V100V**	100μF, 10WV, Electrolytic	1		
C51	ECQM05104KZ	0.1μF, 50WV, ±10%, Polyester	1		
C52	ECQM05104KZ	0.1μF, 50WV, ±10%, Polyester	1		
C101	ECSZ25EF3R3	3.3μF, 25WV, Electrolytic	1		
C102	ECSZ25EF3R3	3.3μF, 25WV, Electrolytic	1		
C103	ECKD1H471KB	470pF, 50WV, ±10%, Ceramic	1		
C104	ECKD1H471KB	470pF, 50WV, ±10%, Ceramic	1		
C105	ECCD1H390K	39pF, 50WV, ±10%, Ceramic	1		
C106	ECCD1H390K	39pF, 50WV, ±10%, Ceramic	1		
C107	ECCD1H121K	120pF, 50WV, ±10%, Ceramic	1		
C108	ECCD1H121K	120pF, 50WV, ±10%, Ceramic	1		
C109	ECQM05102JZ	0.001μF, 50WV, ± 5%, Polyester	1		
C110	ECQM05102JZ	0.001μF, 50WV, ± 5%, Polyester	1		
C111	ECQM05392JZ	0.0039μF, 50WV, ± 5%, Polyester	1		
C112	ECQM05392JZ	0.0039μF, 50WV, ± 5%, Polyester	1		
C113	ECKD1H102MD	0.001μF, 50WV, ±20%, Ceramic	1		
C114	ECKD1H102MD	0.001μF, 50WV, ±20%, Ceramic	1		
C115	**ECEA10V100V**	100μF, 10WV, Electrolytic	1		
C116	**ECEA10V100V**	100μF, 10WV, Electrolytic	1		
C117	**ECEA10V100V**	100μF, 10WV, Electrolytic	1		
C118	**ECEA10V100V**	100μF, 10WV, Electrolytic	1		
C119	**ECEA50N1**	1μF, 50WV, Non-Polar Electrolytic	1		

Ref. No.	Part No.	Part Name & Description	Per Set		Remarks
C120	**ECEA50N1**	1μF, 50WV, Non-Polar Electrolytic	1		
C121	ECQM05102KZ	0.001μF, 50WV, ±10%, Polyester	1		
C122	ECQM05102KZ	0.001μF, 50WV, ±10%, Polyester	1		
C123	**ECEA25V330V**	330μF, 25WV, Electrolytic	1		
C124	**ECEA25V330V**	330μF, 25WV, Electrolytic	1		
C125	**ECEA10V100V**	100μF, 10WV, Electrolytic	1		
C201	**ECEA50MR68**	0.68μF, 50WV, Electrolytic	1		
C202	**ECEA50MR68**	0.68μF, 50WV, Electrolytic	1		
C203	ECCD1H270K	27pF, 50WV, ±10%, Ceramic	1		
C204	ECCD1H270K	27pF, 50WV, ±10%, Ceramic	1		
C205	ECCD1H560K	56pF, 50WV, ±10%, Ceramic	1		
C206	ECCD1H560K	56pF, 50WV, ±10%, Ceramic	1		
C207	**ECEA35V4R7V**	4.7μF, 35WV, Electrolytic	1		
C208	**ECEA35V4R7V**	4.7μF, 35WV, Electrolytic	1		
C209	**ECEA50V1V**	1μF, 50WV, Electrolytic	1		
C210	**ECEA50V1V**	1μF, 50WV, Electrolytic	1		
C211	**ECEA16N4R7**	4.7μF, 16WV, Non-Polar Electrolytic	1		
C212	**ECEA16N4R7**	4.7μF, 16WV, Non-Polar Electrolytic	1		
C213	ECKD1H471KB	470pF, 50WV, ±10%, Ceramic	1		
C214	ECKD1H471KB	470pF, 50WV, ±10%, Ceramic	1		
C215	ECQM05562JZ	0.0056μF, 50WV, ± 5%, Polyester	1		
C216	ECQM05562JZ	0.0056μF, 50WV, ± 5%, Polyester	1		
C217	ECQM05562JZ	0.0056μF, 50WV, ± 5%, Polyester	1		
C218	ECQM05562JZ	0.0056μF, 50WV, ± 5%, Polyester	1		
C219	ECKD1H821KB	820pF, 50WV, ±10%, Ceramic	1		
C220	ECKD1H821KB	820pF, 50WV, ±10%, Ceramic	1		
C221	ECKD1H821KB	820pF, 50WV, ±10%, Ceramic	1		
C222	ECKD1H821KB	820pF, 50WV, ±10%, Ceramic	1		
C223	ECQM05823JZ	0.082μF, 50WV, ± 5%, Polyester	1		
C224	ECQM05823JZ	0.082μF, 50WV, ± 5%, Polyester	1		
C225	ECQM05823JZ	0.082μF, 50WV, ± 5%, Polyester	1		
C226	ECQM05823JZ	0.082μF, 50WV, ± 5%, Polyester	1		
C227	ECQM05123JZ	0.012μF, 50WV, ± 5%, Polyester	1		
C228	ECQM05123JZ	0.012μF, 50WV, ± 5%, Polyester	1		
C229	ECQM05123JZ	0.012μF, 50WV, ± 5%, Polyester	1		
C230	ECQM05123JZ	0.012μF, 50WV, ± 5%, Polyester	1		
C231	ECCD1H330K	33pF, 50WV, ±10%, Ceramic	1		
C232	ECCD1H330K	33pF, 50WV, ±10%, Ceramic	1		
C233	ECEA50NR47X	0.47μF, 50WV, Non-Polar Electrolytic	1		
C234	ECEA50NR47X	0.47μF, 50WV, Non-Polar Electrolytic	1		
C235	**ECEA25V100V**	100μF, 25WV, Electrolytic	1		
C236	**ECEA25V100V**	100μF, 25WV, Electrolytic	1		
C301	ECQM05152KZ	0.0015μF, 50WV, ±10%, Polyester	1		
C302	ECQM05152KZ	0.0015μF, 50WV, ±10%, Polyester	1		
C303	ECKD1H821KB	820pF, 50WV, ±10%, Ceramic	1		
C304	ECKD1H821KB	820pF, 50WV, ±10%, Ceramic	1		
C305	ECQM05473KZ	0.047μF, 50WV, ±10%, Polyester	1		
C306	ECQM05473KZ	0.047μF, 50WV, ±10%, Polyester	1		
C307	ECQM05333KZ	0.033μF, 50WV, ±10%, Polyester	1		
C308	ECQM05333KZ	0.033μF, 50WV, ±10%, Polyester	1		
C309	**ECEA50MR68**	0.68μF, 50WV, Electrolytic	1		
C310	**ECEA50MR68**	0.68μF, 50WV, Electrolytic	1		
C311	**ECEA50N1**	1μF, 50WV, Non-Polar Electrolytic	1		
C312	**ECEA50N1**	1μF, 50WV, Non-Polar Electrolytic	1		
C313	**ECEA25V100V**	100μF, 25WV, Electrolytic	1		
C314	**ECEA25V100V**	100μF, 25WV, Electrolytic	1		
C401	**ECEA50MR68**	0.68μF, 50WV, Electrolytic	1		
C402	**ECEA50MR68**	0.68μF, 50WV, Electrolytic	1		

■ CABINET & CHASSIS PARTS LOCATION

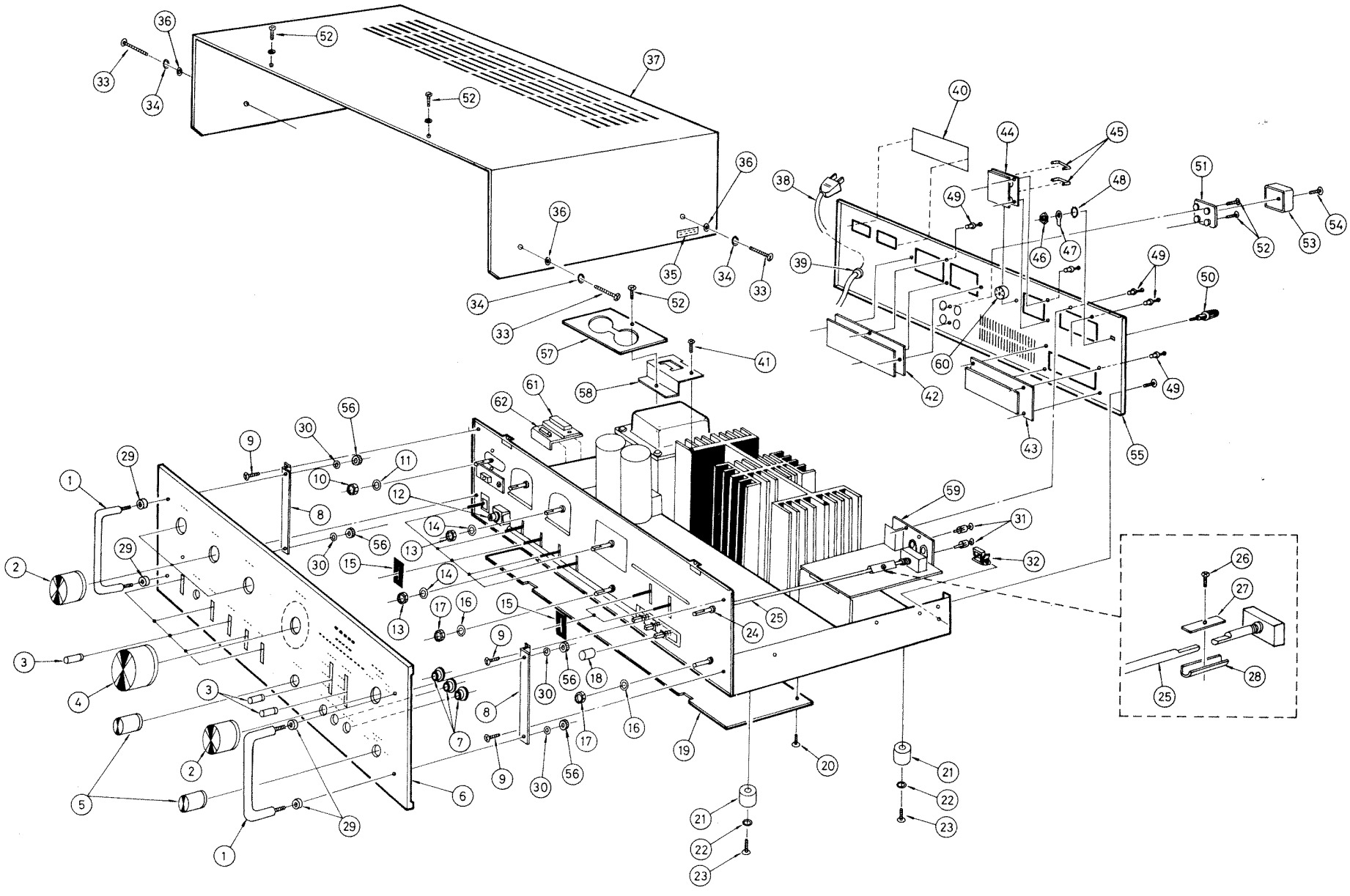

Ref. No.	Part No.	Part Name & Description	Per Set		Remarks
C403	ECCD1H270K	27pF, 50WV, ±10%, Ceramic	1		
C404	ECCD1H270K	27pF, 50WV, ±10%, Ceramic	1		
C405	ECCD1H101K	100pF, 50WV, ±10%, Ceramic	1		
C406	ECCD1H101K	100pF, 50WV, ±10%, Ceramic	1		
C407	**ECEA16V47**	47μF, 16WV, Electrolytic	1		
C408	**ECEA16V47**	47μF, 16WV, Electrolytic	1		
C411	ECCD1H101K	100pF, 50WV, ±10%, Ceramic	1		
C412	ECCD1H101K	100pF, 50WV, ±10%, Ceramic	1		
C413	ECCD1H101K	100pF, 50WV, ±10%, Ceramic	1		
C414	ECCD1H101K	100pF, 50WV, ±10%, Ceramic	1		
C415	ECCD1H220KC	22pF, 50WV, ±10%, Ceramic	1		
C416	ECCD1H220KC	22pF, 50WV, ±10%, Ceramic	1		
C417	ECQM1473M	0.047μF, 125WV, ±20%, Polyester	1		
C418	ECQM1473M	0.047μF, 125WV, ±20%, Polyester	1		
C421	**ECEA50V33V**	33μF, 50WV, Electrolytic	1		
C422	ECCD1H101K	100pF, 50WV, ±10%, Ceramic	1		
C423	ECCD1H101K	100pF, 50WV, ±10%, Ceramic	1		
C424	ECCD1H030C	3pF, 50WV, ±0.25pF Ceramic	1		
C425	ECCD1H030C	3pF, 50WV, ±0.25pF Ceramic	1		
C501	ECET55R153Y	15000μF, 55WV, Electrolytic	1		○
C502	ECET55R153Y	15000μF, 55WV, Electrolytic	1		○
C503	**ECEA63V100V**	100μF, 63WV, Electrolytic	1		
C504	**ECEA63V100V**	100μF, 63WV, Electrolytic	1		
C505	**ECEA63V100V**	100μF, 63WV, Electrolytic	1		
C506	**ECEA63V100V**	100μF, 63WV, Electrolytic	1		
C507	**ECEA50V100V**	100μF, 50WV, Electrolytic	1		
C508	**ECEA50V100V**	100μF, 50WV, Electrolytic	1		
C509	**ECEA25V100V**	100μF, 25WV, Electrolytic	1		
C510	**ECEA25V100V**	100μF, 25WV, Electrolytic	1		
C511	ECKD1H102PF	0.001μF, 50WV, $^{+100\%}_{-0}$ Ceramic	1		
C512	**ECEA50V3R3V**	3.3μF, 50WV, Electrolytic	1		
C513	**ECEA16N220V**	220μF, 16WV, Non-Polar Electrolytic	1		
C514	**ECEA6V220V**	220μF, 6.3WV, Electrolytic	1		
C515	**ECEA50V100V**	100μF, 50WV, Electrolytic	1		
C516	**ECEA50V100V**	100μF, 50WV, Electrolytic	1		
C517	**ECEA63V47V**	47μF, 63WV, Electrolytic	1		
C518	**ECEA63V47V**	47μF, 63WV, Electrolytic	1		
COMPONENT COMBINATION					
M501	RXAF103P22HD	0.01μF (x2) Hum Canel	1		
FUSES					
F1	XBA2C31TR0	3.15A, T Fuse, Power Source	1		
F5 [X,XG,XGH]	XBA2C31TR0	3.15A, T Fuse, Power Source Except set for [XSD], [XSW], [XE] & [XAL]	1		
F2, 3	XBA2C40SS0	4A Fuse, Speaker Circuit Protection	2		
SWITCHES					
S1	SSRA73	Input Selector Switch	1		
S2	SSLA22S	Tape Monitor Switch	1		
S3	SSLA21S	Recording Mode Switch	1		
S4	SSR51	Mode Selector Switch	1		
S5, 8	SSLA25-1S	Muting & Tone Switch	2		
S7, 9	SSLA26-1S	Treble & Bass Turnover Switch	2		
S6, 10, 11	SSH313S-V	Loudness, High & Low Filter Switch	1		
S12	ESRC124F30B	Speaker Selector Switch	1		

Ref. No.	Part No.	Part Name & Description	Per Set		Remarks
S13	SSL5S	Power Switch	1		
RELAY					
RELAY 1	SSY13	Speaker Protection Relay			
CABINET and CHASSIS PARTS					
1	SKYA4	Handle, Front Panel	2		
2	SBNA128-1	Knob, Bass, Treble, Speaker, Selector	4		○
3	SBLA4-3	Button, Lever Switches	7		
4	SBN603	Knob, Volume Control	1		○
5	SBN605	Knob, Balance & Mode Switch	2		○
6	SGW7330	Panel, Front	1		○
7	SGX6431	Sleeve, Push Switch Buttons	3		
8	SUW881-1	Metal Clamp, Front Panel	2		
9	XTV3+8C	Screw, Metal Clamp M'tg	4		
10	XNS9	Nut, Speaker Switch & Headphones M'tg	2		
11	XWV9	Spring Washer, Speaker Switch	1		
12	SJJA15	Jack, Headphones	1		
13	XNS8	Nut, Bass, Treble, Volume Control M'tg	3		
14	XWV8	Spring Washer, Bass, Treble, Volume	3		
15	SHS2347	Cover, Lever Switches	7		
16	XWV7	Spring Washer, Balance & Mode Switch	2		
17	XNS7	Nut, Balance & Mode Switch M'tg	2		
18	SBC129	Button, Push Switches	3		
19	SKU5590	Botton Board	1		
20	XTV3+8CFYR	Screw, Bottom Board M'tg	2		
21	SHGA303-1	Foot, Leg	4		
22	XWG4F13	Washer, Foot	4		
23	XTN4+20B	Screw, Foot M'tg	4		
24	**XUC5FT**	Stop Ring, Coupling Rod	2		
25	SUB3	Coupling Rod, Selector Switch	1		
26	XYN3+C10S	Screw, Coupler M'tg	1		
27	SUBA20	Bracket, Coupler	1		
28	SUBA19S	Coupler, Selector Switch & Rod	1		
29	SGXA64	Bracket, Panel Handle	4		
30	XWAR5BFZ	Washer, Panel Handle M'tg Nut	4		
31	SJPA11	Short Pin, Phono 2 Terminals	2		
32	SHRA307	Clamp, Lead Wire	3		
33	XSB4+10FZS	Screw, Cabinet M'tg	4		
34	XWA4BFZ	Spring Washer, Cabinet Screw	4		
35	SQXA4112	Caution Label, Screw	1		
36	XWG4FZ	Washer, Cabinet Screw	4		
37	SKA7970	Cabinet	1		○
38 [X,XG]	SJA97	AC Cord, Set for [X] & [XG]	1		
38 [XGH,XSD]	SJA81	AC Cord, Set for [XGH] & [XSD]	1		
38 [XSW]	**SJA68**	AC Cord, Only Set for [XSW]	1		
38 [XE]	SJA73	AC Cord, Only Set for [XE]	1		
38 [XAL]	SJA79	AC Cord, Only Set for [XAL]	1		
39 [X,XG,XGH, XSD,XSW]	RHR106	Bushing, AC Cord, Set for [X], [XG] [XGH], [XSD] & [XSW]	1		
39 [XE,XAL]	SHR131	Bushing, AC Cord, Set for [XE] & [XAL]	1		
40	SUE1	Cover Plate, AC outlet Hole	1		
41	XTB3+10BFZ	Screw, Reinforcement Board M'tg	1		
42	SJF5801	Terminal, Speakers	1		
43	SJF3803	Terminal, Tape Deck	1		
44	SJF3419	Terminal, Pre & Main Amplifier	1		
45	SJP9205	Short Pin Plug, Pre & Main Amplifier	2		
46	XNGR6	Nut, Ground Terminal M'tg	1		

Ref. No.	Part No.	Part Name & Description	Per Set	Remarks
47	SJT201	Terminal, Lead Wire	1	
48	XWC6B	Toothed Ring, Ground Terminal	1	
49	SHR401-1	Lock Pin, Terminals	13	
50	SJF4101	Terminal, Ground	1	
51	SJF205	Holder, Speaker Circuit Protection Fuse	1	
52	XTB3+8BFZ	Screw, Fuse Holder & DIN Socket M'tg	6	
53	SJFA5202-1	Cover, Fuse Holder	1	
54	XSN26+12	Screw, Fuse Cover M'tg	1	
55 [X,XG,XGH]	SGP212-2D	Rear Panel, Set for [X], [XG] & [XGH]	1	○
55 [XSD,XSW]	SGP212-2DD	Rear Panel, Set for [XSD] & [XSW] (with Name Plate SGT12112)	1	○
55 [XE]	SGP212-3DE	Rear Panel, Set for [XE] (with Name Plate SGT12111)	1	○
55 [XAL]	SGP212-3DL	Rear Panel, Set for [XAL] (with Name Plate SGT12113)	1	○
56	XNGS6C01	Nut, Front Panel Handle M'tg	4	
57	SUW887-2	Reinforcement Board, Electrolytic Capacitor	1	○
58	SUW885	Metal Clamp, Reinforcement Board	1	○
59	SJFA3805-1	Terminal, Input	1	
60	RJS31-1	Socket, Tape Deck (Rec/Play)	1	
61 [X,XG,XGH, XSD,XSW,XE]	SJEA4	Socket, Voltage Selector (Except Set for [XAL])	1	
62 [X,XG,XGH]	SJFA5101	Holder, Fuse (Except Set for [XSD], [XSW], [XE] & [XAL])	1	
ACCESSORIES				
A1	XBA2C40SS0	4A Fuse, Speaker Circuit Protection	2	
A2 [X]	RJP5213	AC Plug, Only Set for [X]	1	
A3 [X]	RJP5215	AC Plug, Only Set for [X]	1	
PACKING PARTS				
P1	SPPA27	Soft Cover	1	
P2	SPP465	Polyethylene Bag, Set	1	
P3	SPS137-2	Pad, Right & Left Side	2	○
P4 [X,XAL]	SPN5167	Carton Box, Inner (Set for [X] & [XAL]) Except Set for [XG], [XGH], [XSD], [XSW] & [XE]	1	○
P4 [XG,XGH, XSD,XSW,XE]	SPG717	Carbon Box, (Set for [XG],] XGH], [XSD], [XSW] & [XE])	1	○
P5 [X,XAL]	SPG715	Carton Box, Outer (Set for [X] & [XAL])	1	○
P6 [X,XAL]	SPS719	Pad, Carton Box (Only set for [X] & [XAL])	2	○
P7 [X,XG,XGH]	SQF1267	Printed Matter, Set for [X], [XG] & [XGH]	1	○
P7 [XSD,XSW]	SQF1355	Printed Matter, Set for [XSD] & [XSW]	1	○
P7 [XE]	SQF1269	Printed Matter, Only Set for [XE]	1	○
P7 [XAL]	SQF1357	Printed Matter, Only Set for [XAL]	1	○

Notes: Set for [X] are European, Asia, Latin America, Oceania, Middle East and Africa.
Set for [XG] are European.
Set for [XGH] is Holland.
Set for [XSD] are Denmark, Sweden, Norway and Finland.
Set for [XSW] is Swiss.
Set for [XAL] is Australia.
Set for [XE] is England.

■ PACKINGS

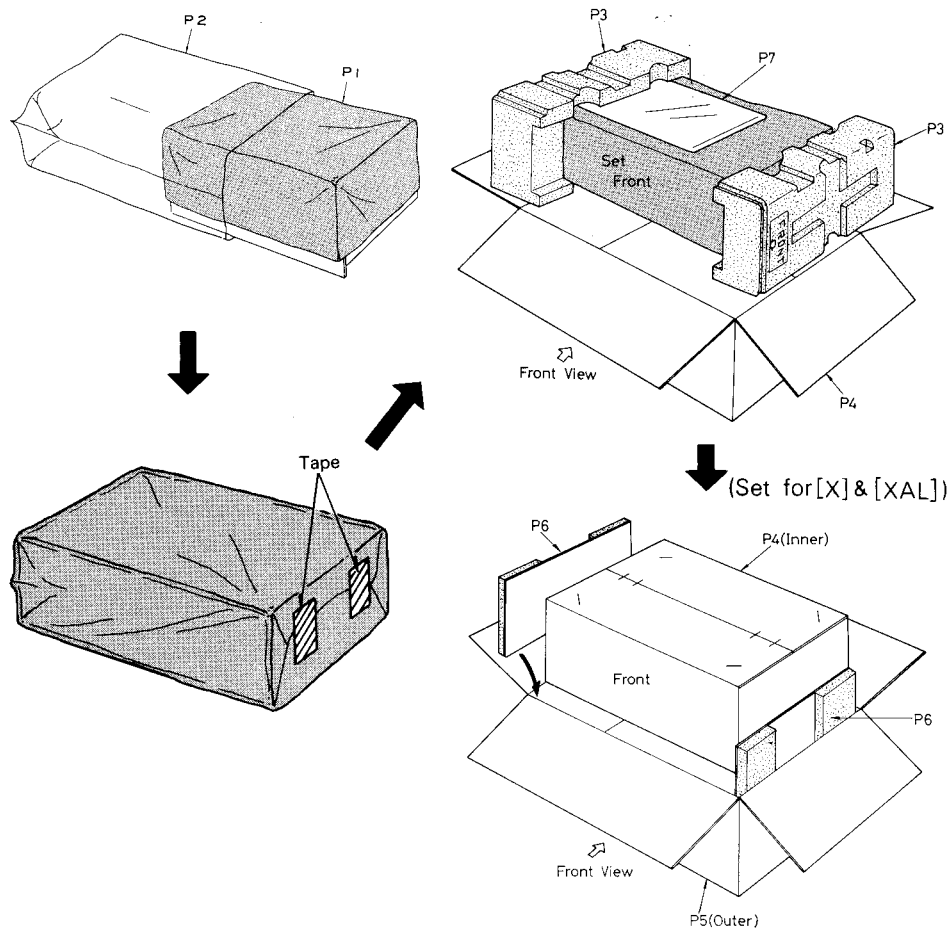

■ ACCESSORIES

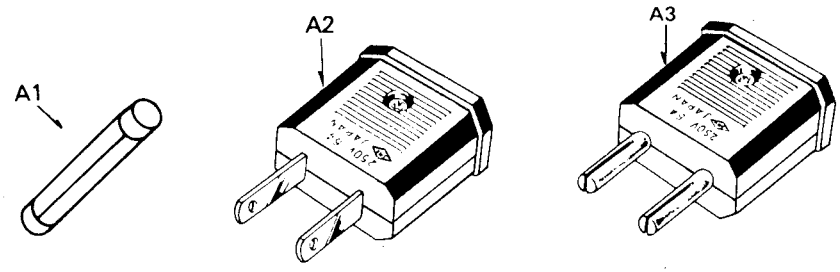

A2 & A3 . . . . . Set for (X)

Printed in Japan
7608-6,000