CONFIDENTIAL

PROPERTY OF
SONAVOX CANADA

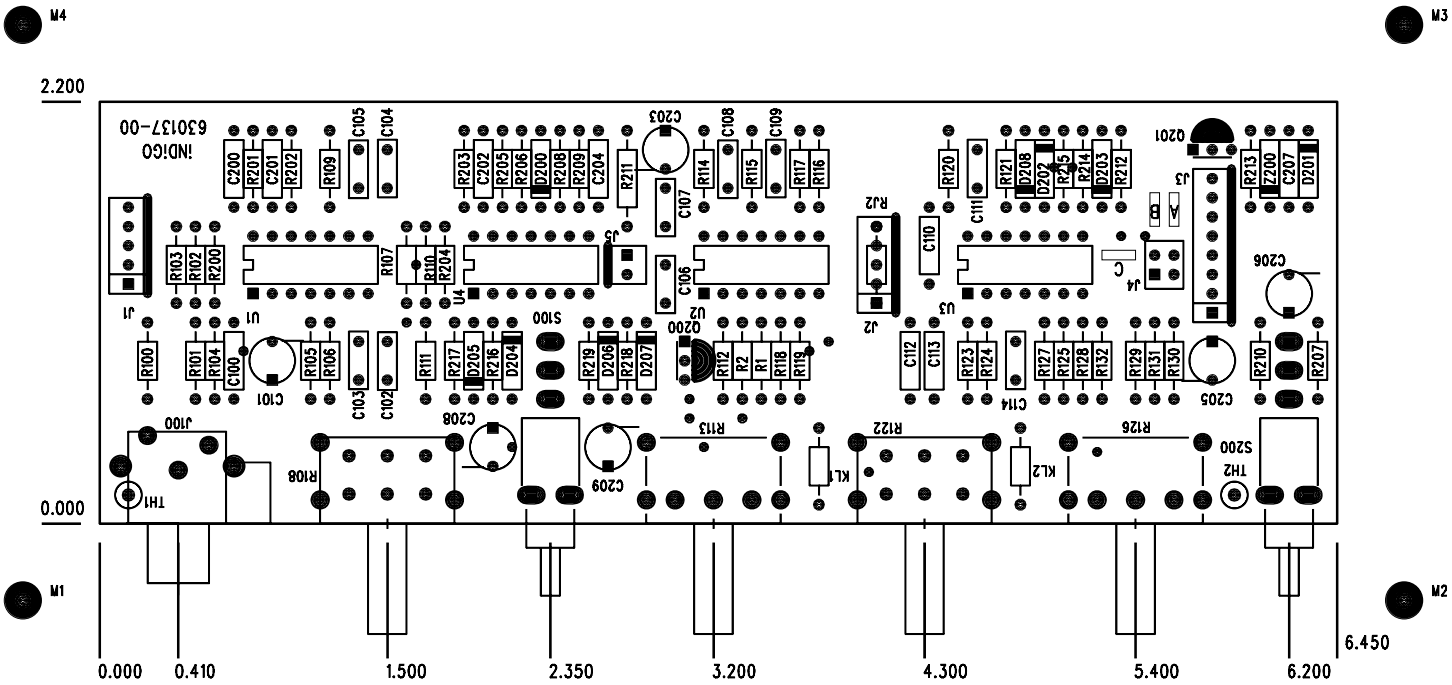

INDIGO CONFIDENTIAL

REPRODUCTION OR ISSUE TO 3RD PARTIES IS PROHIBITED

This drawing and data embody proprietary designs and information, which is the confidential property of Indigo Manufacturing Inc. None of which shall be copied, reproduced, disclosed to others, proposed or used in whole or in part, for any purpose without express written permission of a duly authorized agent of Indigo Manufacturing Inc. This document is subject to recall by Indigo Manufacturing at any time. It is being submitted in confidence, and patent rights are reserved by Indigo Manufacturing Inc.

Copyright 2002 Indigo Manufacturing Inc., Markham, Ontario Canada

TANNOY Feature Board

INDIGO part number:	Revision:	Date:
630137	0	15/10/03