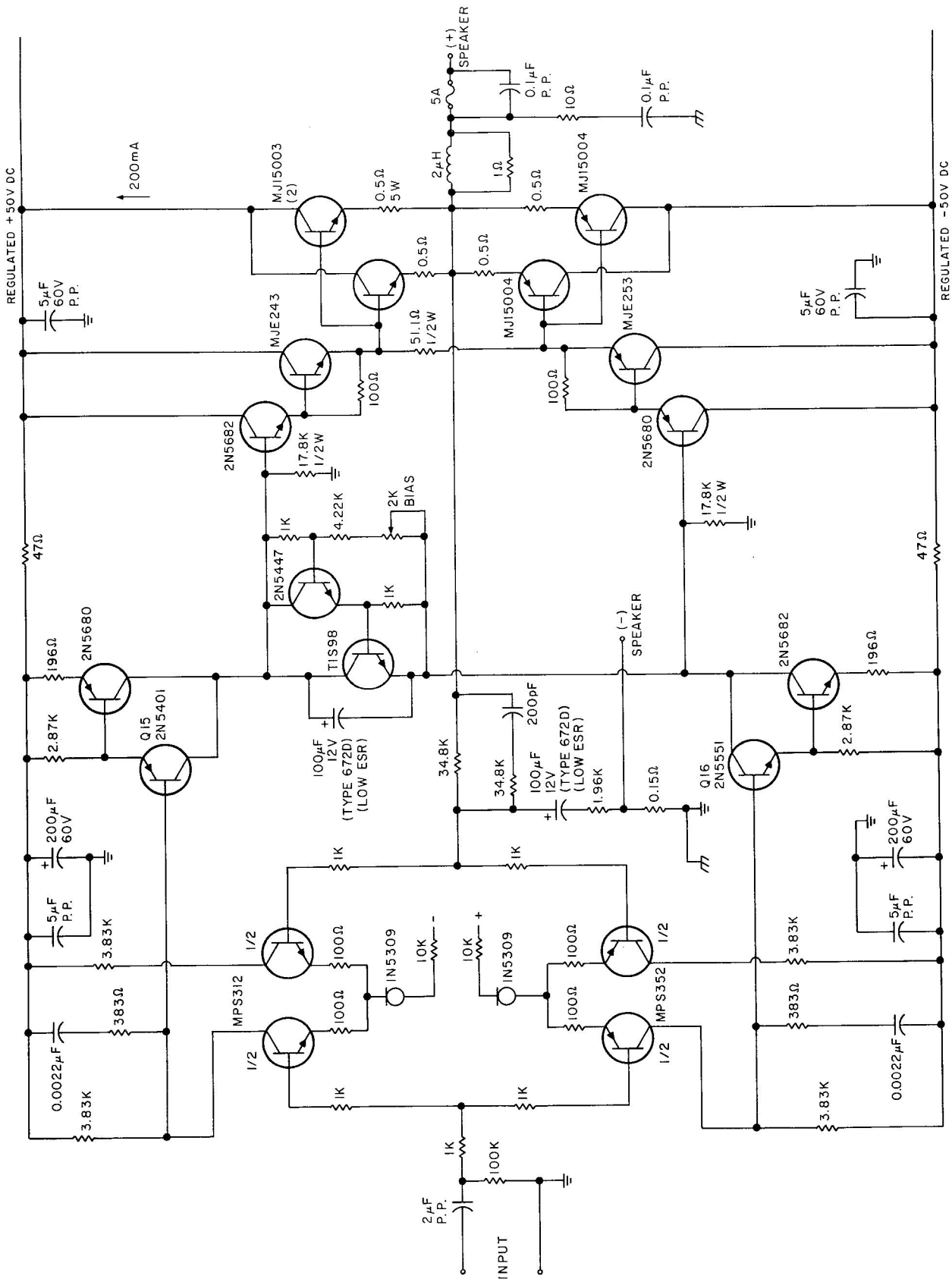

FIGURE 1: These changes in the Leach "low-TIM" amplifier resulted in lower distortion. The biggest improvements were the addition of Q15 and Q16 in the driver stage and increased currents in all stages.