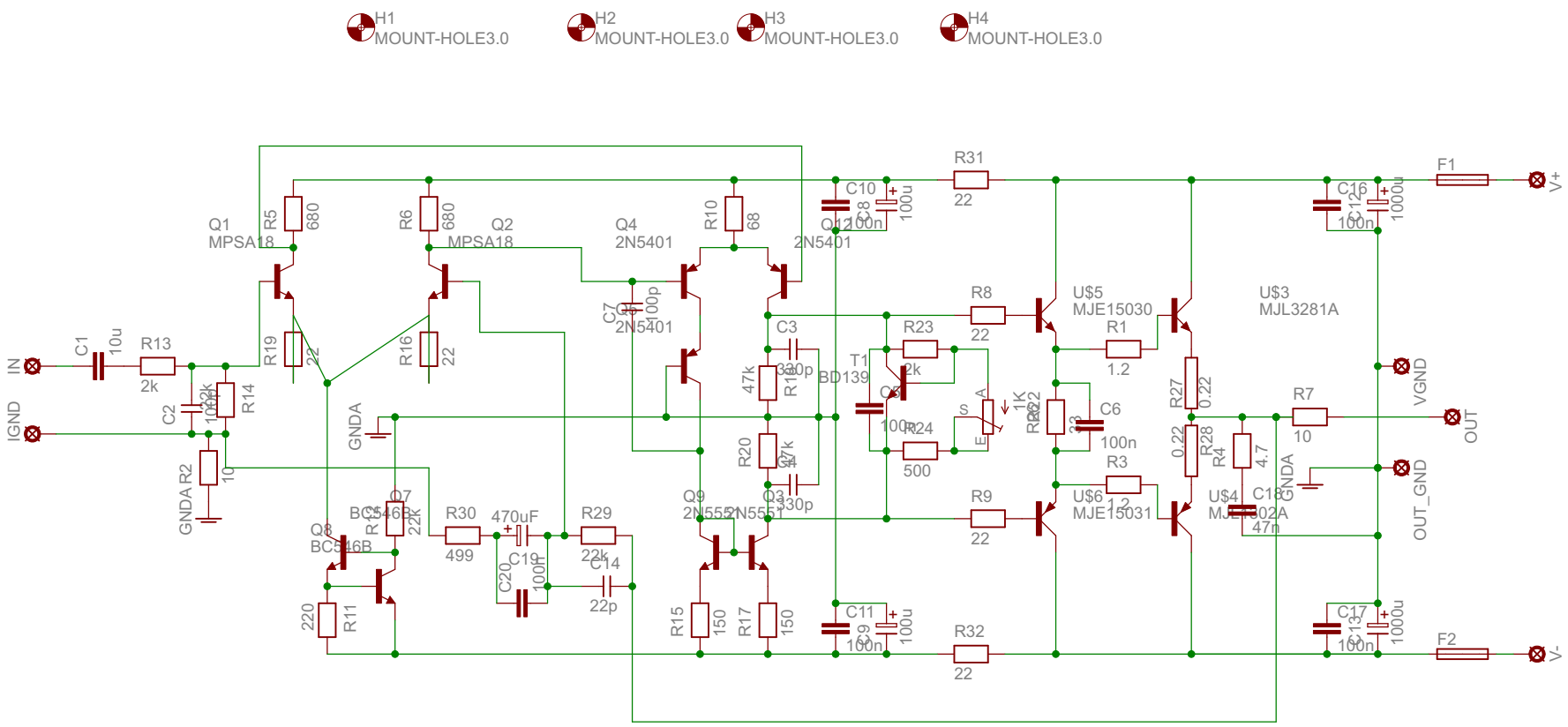

27/03/2010 21:37:13 E:\electronic projects\Symasym 5.3\sym5_3_board\symasym_5_3.sch (Sheet: 1/1)