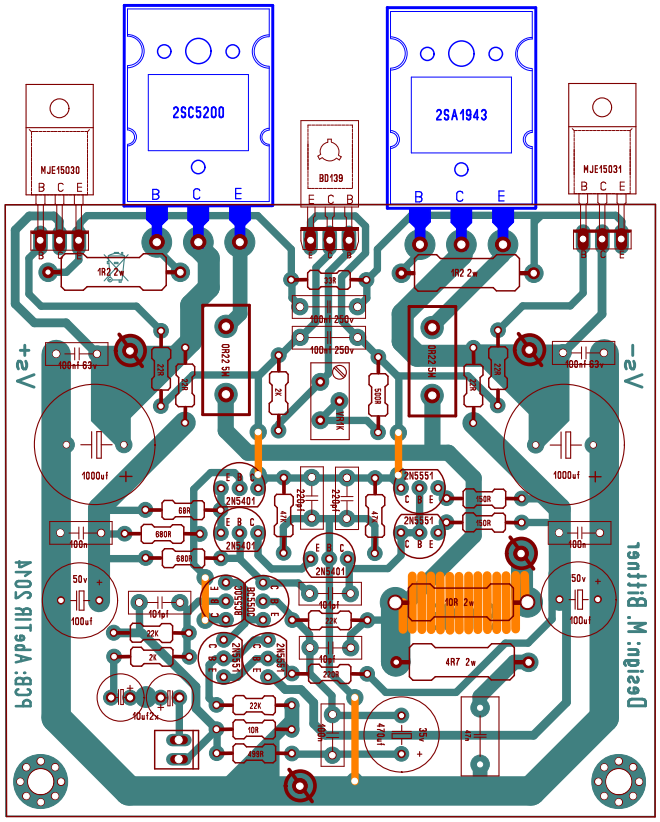
2SC5200
2SA1943
MJE15030
MJE15031
BD139
+5V
-5V
1000uf
2N5401
2N5551
10R 2w
4R7 2w
Design: M. Bittner
PCB: Apeltik 2014

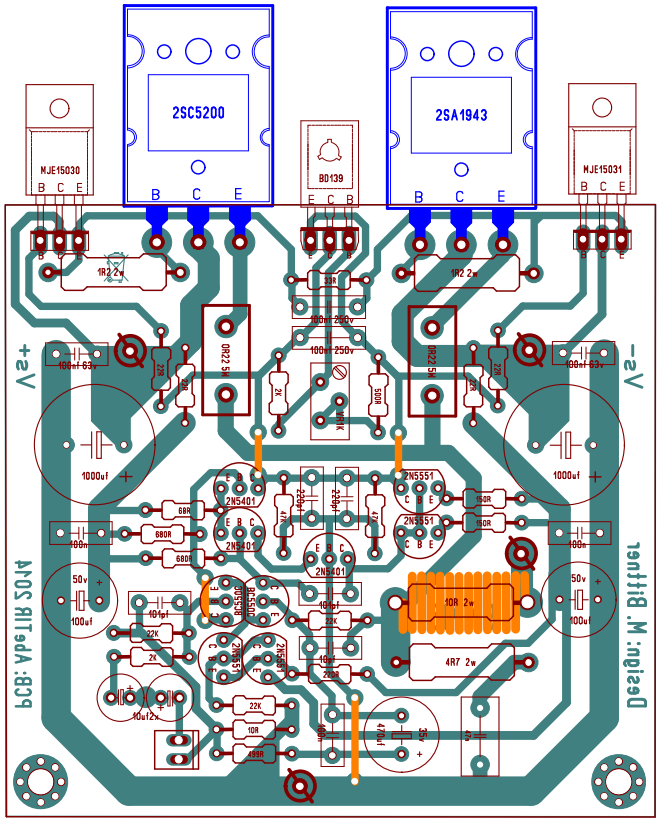
2SC5200
2SA1943
MJE15030
MJE15031
BD139
+5V
-5V
1000uf
2N5401
2N5551
10R 2w
4R7 2w
Design: M. Bittner
PCB: Apeltik 2014