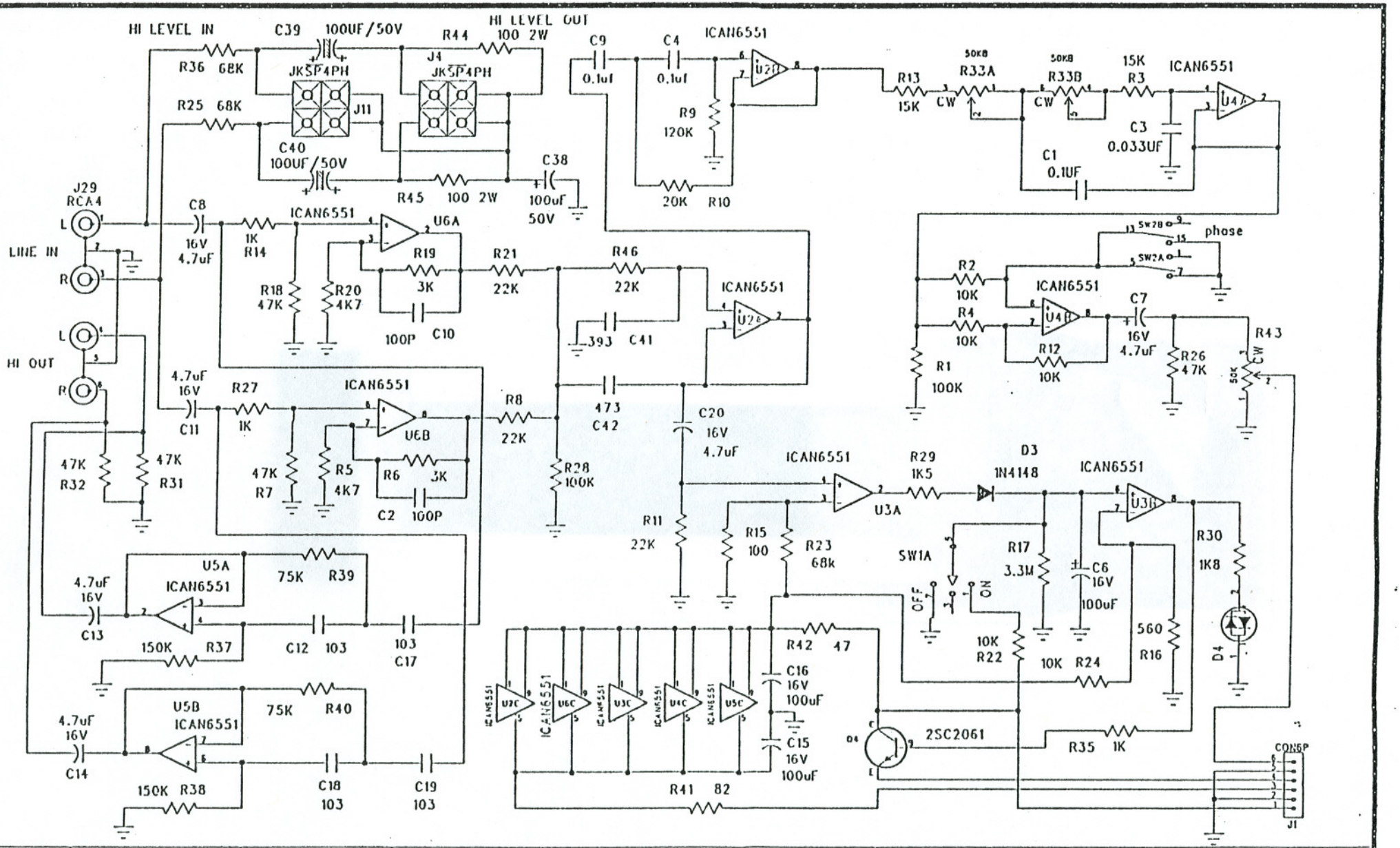

MATERIAL		TOLERANCE		HT-S15 EQ.				DESCRIPTION	SCHEMATIC DIAGRAM	VERSION	
FINISH		0.5--15	±0.2		SCALE	MODEL	DATE	PARTS NO.	CROSSOVER PCB		2.0
		15--60	±0.4		DRAWN	DESIGN	CHECK	APPROVED	DISK NO.	A3	
		60--150	±0.5								
		150--250	±0.6								
		250--500	±0.8								