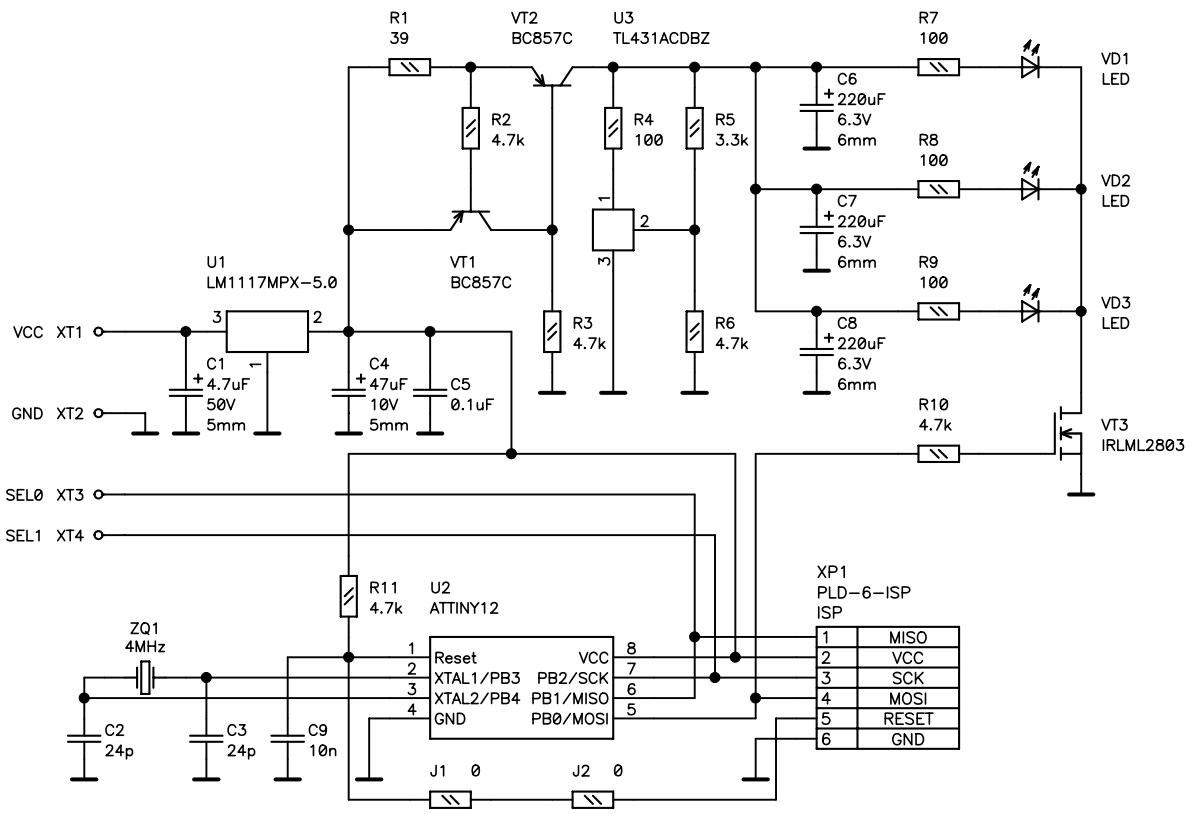

Company Name NSM lab		
Size M1	Title Strobo	Rev A
Date Wed Jul 27, 2016		Drawn by NSM lab
Filename Strobo.sch		Sheet 1 of 1