STR-KM5500

SERVICE MANUAL

E Model

Ver. 1.2 2009.11

- STR-KM5500 is the receiver section in HT-DDW5500.

This receiver incorporates Dolby* Digital and Pro Logic Surround and the DTS** Digital Surround System.
* Manufactured under license from Dolby Laboratories. Dolby, Pro Logic, and the double-D symbol are trademarks of Dolby Laboratories.
** Manufactured under license under U.S. Patent #'s: 5,451,942; 5,956,674; 5,974,380; 5,978,762; 6,226,616; 6,487,535; 7,003,467; 7,212,872 & other U.S. and worldwide patents issued & pending. DTS, DTS Digital Surround, ES, and Neo:6 are registered trademarks and the DTS logos, Symbol and DTS 96/24 are trademarks of DTS, Inc. © 1996-2008 DTS, Inc. All Rights Reserved.

This receiver incorporates High-Definition Multimedia Interface (HDMI™) technology.
HDMI, the HDMI logo and High-Definition Multimedia Interface are trademarks or registered trademarks of HDMI Licensing LLC.

SPECIFICATIONS

Amplifier section

• Receiver (STR-KM5500)

Power Output

Models of area code SP, E51, AR, TH, SAF, EA, MY

Stereo mode output (rated) (6 ohms, 1 kHz, THD 1%)

100 W + 100 W[1)]
90 W + 90 W[2)]

Surround mode output (reference)[3)]

RMS output

FRONT: 185 W per channel[1)]
170 W per channel[2)]
(with SS-MSP7500)

CENTER: 185 W[1)]
170 W[2)]
(with SS-CNP7500)

SURROUND: 185 W per channel[1)]
170 W per channel[2)]
(with SS-SRP7500)

SURROUND BACK:
185 W[1)]
170 W[2)]
(with SS-SRP7500)

[1)]Measured under the following conditions:

Area code	Power requirements
E51, SP, SAF, MY	240 V AC, 50 Hz
EA	127 V AC, 60 Hz
AR, TH	230 V AC, 50 Hz

[2)]Measured under the following conditions:

Area code	Power requirements
AR, TH	220 V AC, 50 Hz

[3)]Reference power output for front, center, surround and surround back speakers. Depending on the sound field settings and the source, there may be no sound output.

Inputs

Analog: Sensitivity: 800 mV/ 50 kohms

Digital (Coaxial): Impedance: 75 ohms

Outputs (Analog)

AUDIO OUT: Voltage: 800 mV/ 10 kohms

SUBWOOFER: Voltage: 2 V/1 kohm

Tone

Gain levels: ±6 dB, 1 dB step

Reproduction frequency range: 28 – 20,000 Hz

FM tuner section

Tuning range: 87.5 – 108.0 MHz

Antenna: FM wire antenna

Antenna terminals: 75 ohms, unbalanced

Intermediate frequency: 10.7 MHz

AM tuner section

Tuning range

Area code	Tuning scale	
	10 kHz step	9 kHz step
AR, E51	530 – 1,710 kHz	531 – 1,710 kHz
SP, SAF, MY, TH	530 – 1,610 kHz	531 – 1,602 kHz
EA	–	531 – 1,602 kHz

– Continued on next page –

MULTI CHANNEL AV RECEIVER

SONY®

9-890-520-03
2009K80-1
© 2009.11
Sony Corporation
Audio&Video Business Group
Published by Sony EMCS (Malaysia) PG Tec

Antenna Loop antenna
Intermediate frequency
450 kHz

Video section

Inputs/Outputs
Video: 1 Vp-p, 75 ohms
COMPONENT VIDEO:
Y: 1 Vp-p, 75 ohms
PB/CB: 0.7 Vp-p, 75 ohms
PR/CR: 0.7 Vp-p, 75 ohms
80 MHz HD Pass Through

HDMI Video[4)5)]

[4)]The TV output resolution will depends on the capability of TV and component.
[5)]Not support Deep Color.

General

Power requirements

Area code	Power requirements
SP, SAF, MY	230 – 240 V AC, 50/60 Hz
E51	120/220/240 V AC, 50/60 Hz
AR, TH	220 – 230 V AC, 50/60 Hz
EA	120 – 127/220/240 V AC, 50/60 Hz

Power output (DIGITAL MEDIA PORT)
DC OUT: 5 V, 0.7 A MAX
System Control output
DC OUT: 5 V, 50mA MAX

Power consumption 200 W (STR-KM5500)
160 W (TA-KMSW500)
Power consumption (during standby mode)
0.3 W

Dimensions (width/height/depth) including projecting parts and controls (Approx.)
Receiver 430 × 158 × 342 mm
Power amplifier 430 × 158 × 332 mm

Mass (Approx.)
Receiver 7.6 kg
Power amplifier 6.6 kg

Design and specifications are subject to change without notice.

Halogenated flame retardants are not used in the certain printed wiring boards.

- Abbreviation
  AR : Argentina model
  E51 : Chilean and Peruvian models
  EA : Saudi Arabia model
  MY : Malaysia model
  SAF : South African model
  SP : Singapore model
  TH : Thai model

SAFETY-RELATED COMPONENT WARNING!

COMPONENTS IDENTIFIED BY MARK ⚠ OR DOTTED LINE WITH MARK ⚠ ON THE SCHEMATIC DIAGRAMS AND IN THE PARTS LIST ARE CRITICAL TO SAFE OPERATION. REPLACE THESE COMPONENTS WITH SONY PARTS WHOSE PART NUMBERS APPEAR AS SHOWN IN THIS MANUAL OR IN SUPPLEMENTS PUBLISHED BY SONY.

TABLE OF CONTENTS

1. SERVICING NOTES 3

2. GENERAL 4

3. DISASSEMBLY
3-1. Disassembly Flow 11
3-2. Case 11
3-3. Back Panel Section, Video Standby Supply Board Section 12
3-4. Front Panel Section 12
3-5. Digital AB Board 13
3-6. Main Board Section 13

4. TEST MODE 14

5. ELECTRICAL CHECK 16

6. DIAGRAMS
6-1. Block Diagram - TUNER/AUDIO Section - 18
6-2. Block Diagram - DIGITAL AB Section - 19
6-3. Block Diagram - VIDEO Section - 20
6-4. Block Diagram - HDMI SW Section - 21
6-5. Block Diagram - KEY/DISPLAY Section - 22
6-6. Block Diagram - POWER Section - 23
6-7. Printed Wiring Board - MAIN Board - 25
6-8. Schematic Diagram - MAIN Board (1/3) - 26
6-9. Schematic Diagram - MAIN Board (2/3) - 27
6-10. Schematic Diagram - MAIN Board (3/3) - 28
6-11. Printed Wiring Board - DIGITAL AB Board (Side A) - 29
6-12. Printed Wiring Board - DIGITAL AB Board (Side B) - 30
6-13. Schematic Diagram - DIGITAL AB Board (1/3) - 31
6-14. Schematic Diagram - DIGITAL AB Board (2/3) - 32
6-15. Schematic Diagram - DIGITAL AB Board (3/3) - 33
6-16. Printed Wiring Boards - VIDEO STANDBY SUPPLY Section - 34
6-17. Schematic Diagram - VIDEO STANDBY SUPPLY Section - 35
6-18. Printed Wiring Board - HDMI SW Board - 36
6-19. Schematic Diagram - HDMI SW Board - 37
6-20. Printed Wiring Boards - VIDEO2 DCAC, HEADPHONE Section - 38
6-21. Schematic Diagram - VIDEO2 DCAC, HEADPHONE Section - 39
6-22. Printed Wiring Boards - DISPLAY, POWER Section - 40
6-23. Schematic Diagram - DISPLAY, POWER Section - 41
6-24. Printed Wiring Boards - TEMP-SENSOR, CONNECTION Section - 42
6-25. Schematic Diagram - TEMP-SENSOR, CONNECTION Section - 42
6-26. Printed Wiring Boards - AC SELECT Section - 43
6-27. Schematic Diagram - AC SELECT Section - 43

7. EXPLODED VIEWS
7-1. Case 55
7-1. Front Panel Section 56
7-2. Back Panel Section 57
7-3. Chassis Section 58

8. ELECTRICAL PARTS LIST 59

SECTION 1
SERVICING NOTES

Notes on chip component replacement

- Never reuse a disconnected chip component.
- Notice that the minus side of a tantalum capacitor may be damaged by heat.

UNLEADED SOLDER

Boards requiring use of unleaded solder are printed with the lead-free mark (LF) indicating the solder contains no lead.
(Caution: Some printed circuit boards may not come printed with the lead free mark due to their particular size)

: LEAD FREE MARK

Unleaded solder has the following characteristics.

- Unleaded solder melts at a temperature about 40 °C higher than ordinary solder.
  Ordinary soldering irons can be used but the iron tip has to be applied to the solder joint for a slightly longer time.
  Soldering irons using a temperature regulator should be set to about 350 °C.
  Caution: The printed pattern (copper foil) may peel away if the heated tip is applied for too long, so be careful!
- Strong viscosity
  Unleaded solder is more viscou-s (sticky, less prone to flow) than ordinary solder so use caution not to let solder bridges occur such as on IC pins, etc.
- Usable with ordinary solder
  It is best to use only unleaded solder but unleaded solder may also be added to ordinary solder.

NOTE OF REPLACING THE IC1131 ON THE DIGITAL AB BOARD

IC1131 on the DIGITAL AB board cannot exchange with single.
When IC1131 on the DIGITAL AB board is damaged, exchange the entire mounted board.

MODEL IDENTIFICATION
– Rear View –

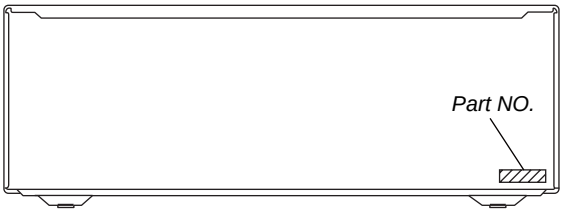

Model	Part No.
Singapore and Malaysia models	4-126-472-0□
Argentina model	4-126-472-1□
Thai model	4-126-472-2□
Chilean and Peruvian models	4-126-472-3□
South African model	4-126-472-5□
Saudi Arabian model	4-126-472-6□

SECTION 2
GENERAL

This section is extracted from instruction manual.

Description and location of parts

Front panel

Receiver

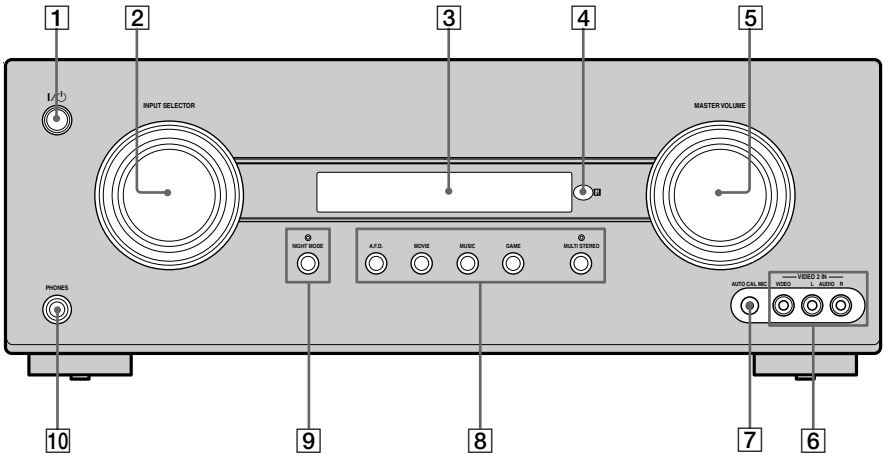

Name	Function
1 **I/⏻ (on/standby)**	Press to turn the receiver on or off (page 30, 37, 38, 55, 64).
2 **INPUT SELECTOR**	Turn to select the input source to play back (page 35, 37, 38, 61, 63).
3 **Display**	The current status of the selected component or a list of selectable items appears here (page 7).
4 **Remote sensor**	Receives signals from remote commander.
5 **MASTER VOLUME**	Turn to adjust the volume level of all speakers at the same time (page 35, 36, 37, 38).
6 **VIDEO 2 IN jacks**	Connect to a portable audio/video component such as a camcorder or video game (page 26, 35).
7 **AUTO CAL MIC jack**	Connects to the supplied optimizer microphone for the Auto Calibration function (page 31).
8 **A.F.D.**	Press to select a sound field (page 50).
MOVIE	
MUSIC	
GAME	
MULTI STEREO	
MULTI STEREO lamp	Lights up when multi stereo sound field is activated.
9 **NIGHT MODE**	Press to enjoy sound effects for watching movie at night (page 41).
NIGHT MODE lamp	Lights up when NIGHT MODE is activated.
10 **PHONES jack**	Connects to headphones (page 69).

About the indicators on the display

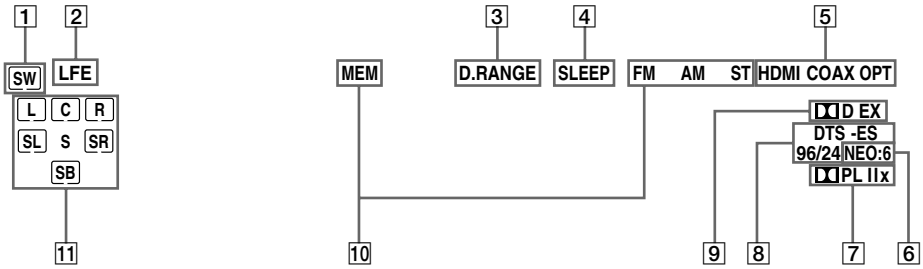

Name	Function
1 **SW**	Lights up when the audio signal is output from the SUBWOOFER jack.
2 **LFE**	Lights up when the disc being played back contains an LFE (Low Frequency Effect) channel and the LFE channel signal is actually being reproduced.
3 **D.RANGE**	Lights up when dynamic range compression is activated (page 42).
4 **SLEEP**	Lights up when the sleep timer is activated.
5 **Input indicators**	Light up to indicate the current input.
HDMI	The receiver recognizes a component connected via an HDMI IN jack.
COAX	Lights up when DVD input is selected if INPUT MODE is set to "AUTO" and the source signal is a digital signal being input through the COAXIAL jack.
OPT	Lights up when BD input is selected. However, "NO INPUT" appears on the display if no digital signal is input through the OPTICAL jack. "OPT" also lights up when SAT input is selected if INPUT MODE is set to "AUTO" and the source signal is a digital signal being input through the OPTICAL jack.
6 **NEO:6**	Lights up when DTS Neo:6 Cinema/Music decoder is activated.

Name	Function
7 **Dolby Pro Logic indicators**	Lights up one of the respective indicators when the receiver applies Dolby Pro Logic processing to 2 channel signals in order to output the center and surround channel signals.
PL	Dolby Pro Logic
PLII	Dolby Pro Logic II
PLIIx	Dolby Pro Logic IIx **Note** Dolby Pro Logic IIx decoding does not function for DTS format signals or for signals with a sampling frequency of more than 48 kHz.

Name	Function
8 **DTS(-ES) indicators**	Light up when DTS or DTS-ES signals are input.
DTS	Lights up when the receiver is decoding DTS signals.
DTS-ES	Lights up when the receiver is decoding DTS-ES signals.
DTS 96/24	Lights up when the receiver is decoding DTS 96/24 (96 kHz/ 24 bit) signals. **Note** When playing a DTS format disc, be sure that you have made digital connections and that INPUT MODE is not set to "ANALOG" (page 59).
9 **Dolby Digital Surround indicators**	Lights up one of the respective indicators when the receiver is decoding the corresponding Dolby Digital format signals.
DD D	Dolby Digital
DD D EX	Dolby Digital Surround EX **Note** When playing a Dolby Digital format disc, be sure that you have made digital connections and that INPUT MODE is not set to "ANALOG".
10 **Tuning indicators**	Lights up when the receiver tunes in radio stations, etc.
MEM	A memory function, such as Preset Memory (page 57), etc., is activated.
FM	FM band is selected.
AM	AM band is selected.
ST	Stereo broadcast.

Name	Function
11 **Playback channel indicators**	The letters (L, C, R, etc.) indicate the channels being played back. The boxes around the letters vary to show how the receiver downmixes the source sound.
L	Front Left
R	Front Right
C	Center (monaural)
SL	Surround Left
SR	Surround Right
S	Surround (monaural or the surround components obtained by Pro Logic processing)
SB	Surround back (the surround back components obtained by 6.1 channel decoding)
	Example: Recording format (Front/ Surround): 3/2.1 Sound Field: A.F.D. AUTO SW LFE L C R SL SR

Rear panel

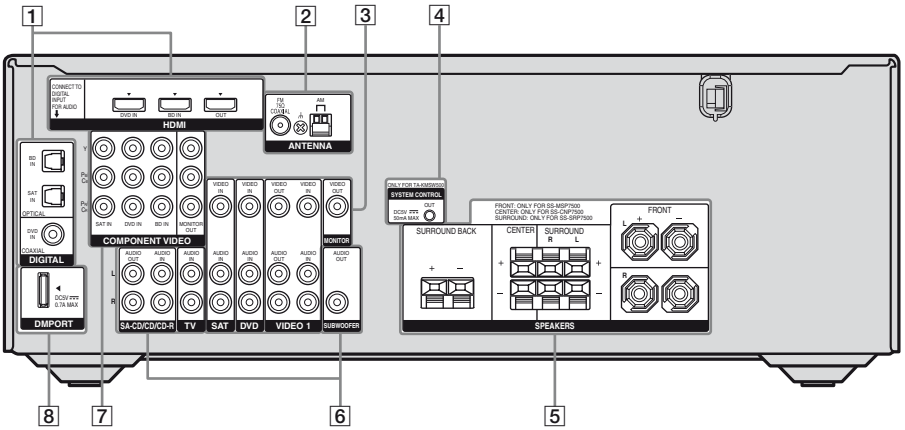

1 DIGITAL INPUT/OUTPUT section

	OPTICAL IN jacks	Connects to a DVD player, etc. The COAXIAL jack provides a better sound quality (page 24, 25).
	COAXIAL IN jack	
	HDMI IN/ OUT* jacks	Connects to a DVD player, etc. The image and the sound are output to a TV (page 22).

2 ANTENNA section

	FM ANTENNA jack	Connects to the supplied FM wire antenna (page 28).
	AM ANTENNA terminals	Connects to the supplied AM loop antenna (page 28).

3 VIDEO/AUDIO INPUT/OUTPUT section

White (L) Red (R)	AUDIO IN/ OUT jacks	Connects to a VCR, DVD player, etc. (page 19, 24, 25, 26).
Yellow	VIDEO IN/ OUT* jacks	

4 SYSTEM CONTROL INPUT/OUTPUT section

SYSTEM CONTROL OUT DC5V ⎓ 50mA MAX	SYSTEM CONTROL OUT jack	Connects to the power amplifier (page 18).

5 SPEAKERS section

		Connects to the supplied speakers (page 16).

6 AUDIO INPUT/OUTPUT section

White (L) Red (R)	AUDIO IN/ OUT jacks	Connects to a Super Audio CD player, etc. (page 20).
Black	AUDIO OUT jack	Connects to the power amplifier (page 18).

7 COMPONENT VIDEO INPUT/ OUTPUT section

Green (Y) Blue (PB/CB) Red (PR/CR)	Y, PB/CB, PR/CR IN/ OUT* jacks	Connects to a DVD player, TV, satellite tuner, etc. You can enjoy high quality image (page 19, 24, 25).

8 DMPORT

	DMPORT jack	Connects to a DIGITAL MEDIA PORT adapter (page 60).

*You can watch the selected input image when you connect the HDMI OUT or MONITOR OUT jack to a TV (page 19).

Remote commander

You can use the supplied remote to operate the receiver and to control the Sony audio/video components that the remote is assigned to operate. For details, see "Changing button assignments" (page 64).

RM-AAU027

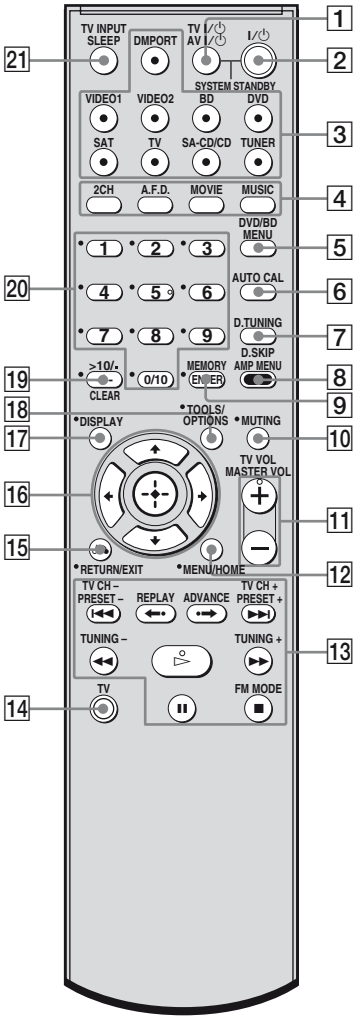

Name	Function
1 **TV I/⏻ (on/standby)**	Press TV I/⏻ and TV (14) at the same time to turn the TV on or off.
AV I/⏻ (on/standby)	Press to turn on or off the Sony audio/video components that the remote is assigned to operate. If you press I/⏻ (2) at the same time, it will turn off the receiver and other components (SYSTEM STANDBY). **Note** The function of the AV I/⏻ switch changes automatically each time you press the input buttons (3).
2 **I/⏻ (on/standby)**	Press to turn the receiver on or off. To turn off all components, press I/⏻ and AV I/⏻ (1) at the same time (SYSTEM STANDBY).
3 **Input buttons**	Press one of the buttons to select the component you want to use. When you press any of the input buttons, the receiver turns on. The buttons are factory assigned to control Sony components. You can change the button assignments following the steps in "Changing button assignments" on page 64.
4 **2CH**	Press to select a sound field.
A.F.D.	
MOVIE	
MUSIC	
5 **DVD/BD MENU**	Press to display the menu of the DVD or Blu-ray disc on the TV screen. Then, use ↑, ↓, ←, → and ⊕ (16) to perform menu operations.
6 **AUTO CAL**	Press to activate the Auto Calibration function (page 32).
7 **D.TUNING**	Press to enter direct tuning mode.
D.SKIP	Press to skip a disc when using a multi-disc changer.

Name	Function
8 **AMP MENU**	Press to display the menu of the receiver. Then, use ↑, ↓, ←, → and ⊕ (16) to perform menu operations.
9 **ENTER**	Press to enter the value after selecting a channel, disc or track using the numeric buttons of the TV, VCR or satellite tuner.
MEMORY	Press to store a station.
10 **MUTING**	Press to turn off the sound temporarily. Press MUTING again to restore the sound. Press MUTING and TV (14) at the same time to activate the TV's muting function.
11 **TV VOL +[a]/–**	Press TV VOL +/– and TV (14) at the same time to adjust the TV volume level.
MASTER VOL +[a]/–	Press to adjust the volume level of all speakers at the same time.
12 **MENU/HOME**	Press to display the menu of the VCR, DVD player, satellite tuner or Blu-ray disc player on the TV screen. Press MENU/HOME and TV (14) at the same time to display the TV's menu. Then, use ↑, ↓, ←, → and ⊕ (16) to perform menu operations.
13 **⏮/⏭[b]**	Press to skip a track of the CD player, DVD player or Blu-ray disc player.
REPLAY ←·/ ADVANCE ·→	Press to replay the previous scene or fast forward the current scene of the VCR, DVD player or Blu-ray disc player.
◀◀/▶▶[b]	Press to – search tracks in the forward/reverse direction of the DVD player. – start fast forward/rewind of the VCR, CD player or Blu-ray disc player.
▷[a)b)]	Press to start playback of the VCR, CD player, DVD player or Blu-ray disc player.

Name	Function
❚❚[b]	Press to pause playback or recording of the VCR, CD player, DVD player or Blu-ray disc player. (Also starts recording with components in recording standby.)
■[b]	Press to stop playback of the VCR, CD player, DVD player or Blu-ray disc player.
TV CH +/–	Press TV CH +/– and TV (14) at the same time to select preset TV channels.
PRESET +/–	Press to select – preset stations. – preset channels of the VCR or satellite tuner.
TUNING +/–	Press to scan a station.
FM MODE	Press to select the FM monaural or stereo reception.
14 **TV**	Press TV and the button with orange printing at the same time to enable the TV operation.
15 **RETURN/ EXIT ↶**	Press to – return to the previous menu. – exit the menu while the menu or on-screen guide of the VCR, DVD player, satellite tuner or Blu-ray disc player is displayed on the TV screen. Press RETURN/EXIT ↶ and TV (14) at the same time to return to the previous menu or exit the TV's menu while the menu is displayed on the TV screen.
16 **⊕ ↑/↓/←/→**	After pressing DVD/BD MENU (5), AMP MENU (8) or MENU/HOME (12), press ↑, ↓, ← or → to select the settings. Then, press ⊕ to enter the selection if you have pressed DVD/BD MENU or MENU/HOME previously. Press ⊕ also to enter the selection of the receiver, VCR, satellite tuner, CD player, DVD player or Blu-ray disc player.

Name	Function
17 **DISPLAY**	Press to select information displayed on the TV screen of the VCR, satellite tuner, CD player, DVD player or Blu-ray disc player. Press DISPLAY and TV (14) at the same time to display TV's information on the TV screen.
18 **TOOLS/ OPTIONS**	Press to display and select the options of the DVD player or Blu-ray disc player. Press TOOLS/OPTIONS and TV (14) at the same time to display options applicable to the Sony TV.
19 **-/--**	Press to select the channel entry mode, either one or two digits of the VCR. Press -/-- and TV (14) at the same time to select the channel entry mode, either one or two digits of the TV.
>10/-	Press to select – track numbers over 10 of the VCR, satellite tuner or CD player. – channel numbers of the Digital CATV terminal.
CLEAR	Press to clear a mistake when you press the incorrect numeric button.
20 **Numeric buttons (number 5[a])**	Press to – preset/tune to preset stations. – select track numbers of the CD player, DVD player or Blu-ray disc player. Press 0/10 to select track number 10. – select channel numbers of the VCR or satellite tuner. Press the numeric buttons and TV (14) at the same time to select the TV channels.
21 **TV INPUT**	Press TV INPUT and TV (14) at the same time to select the input signal (TV input or video input).
SLEEP	Press to activate the Sleep Timer function and the duration which the receiver turns off automatically.

[a] The tactile dot is attached to these buttons (The number 5, MASTER VOL +/TV VOL +, ▷). Use as a mark of operation.

[b] This button is also available for DIGITAL MEDIA PORT adapter operation. For details on the function of the button, see the operating instructions supplied with the DIGITAL MEDIA PORT adapter.

Notes

- Some functions explained in this section may not work depending on the model.
- The above explanation is intended to serve as an example only. Therefore, depending on the component, the above operation may not be possible or may operate differently than described.

SECTION 3
DISASSEMBLY

- This set can be disassembled in the order shown below.

3-1. DISASSEMBLY FLOW

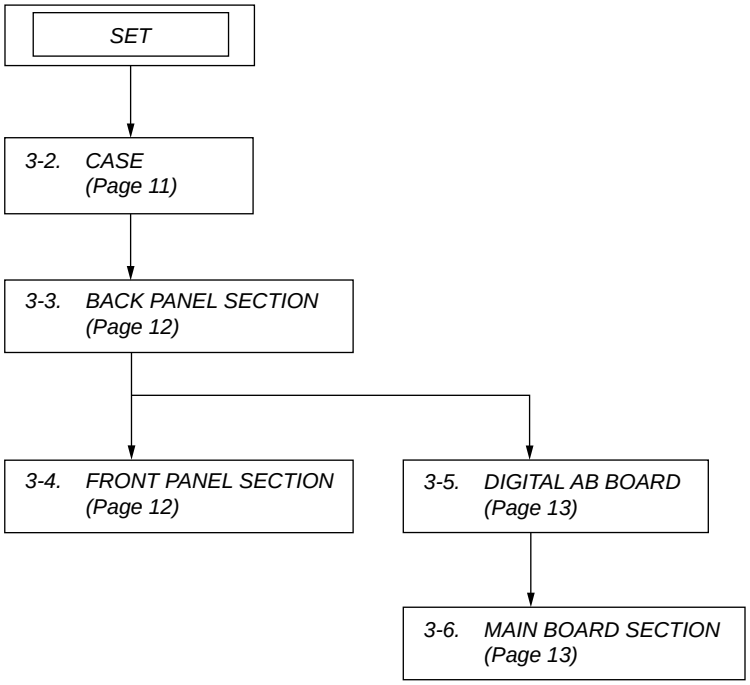

Note: Follow the disassembly procedure in the numerical order given.

3-2. CASE

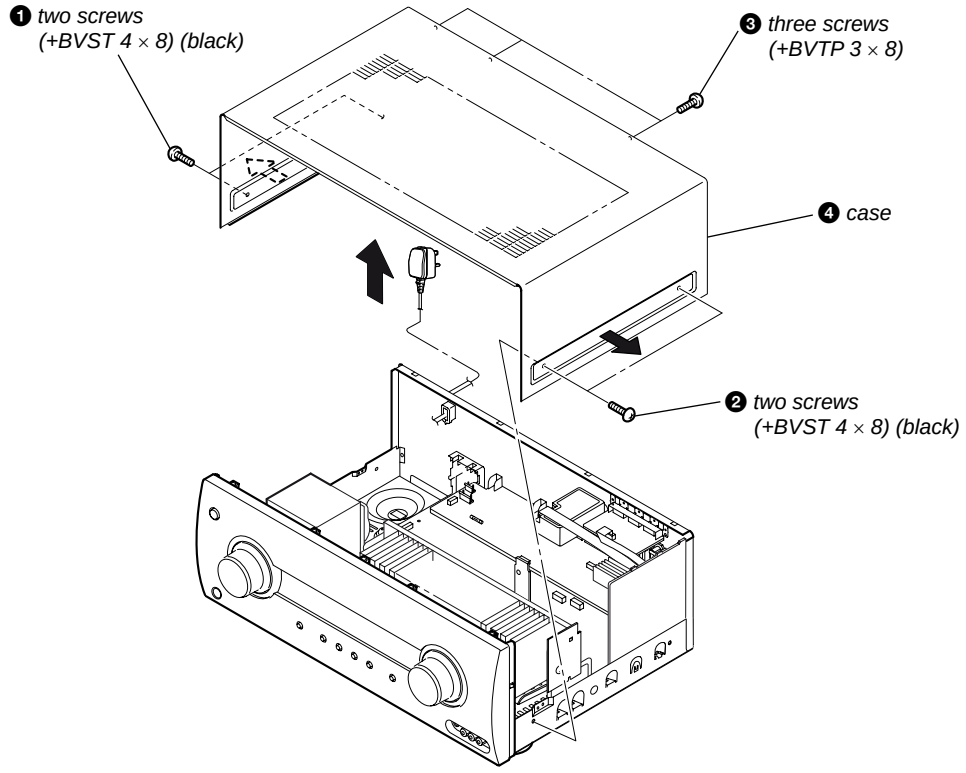

3-3. BACK PANEL, VIDEO STANDBY SUPPLY BOARD, AC SELECT BOARD

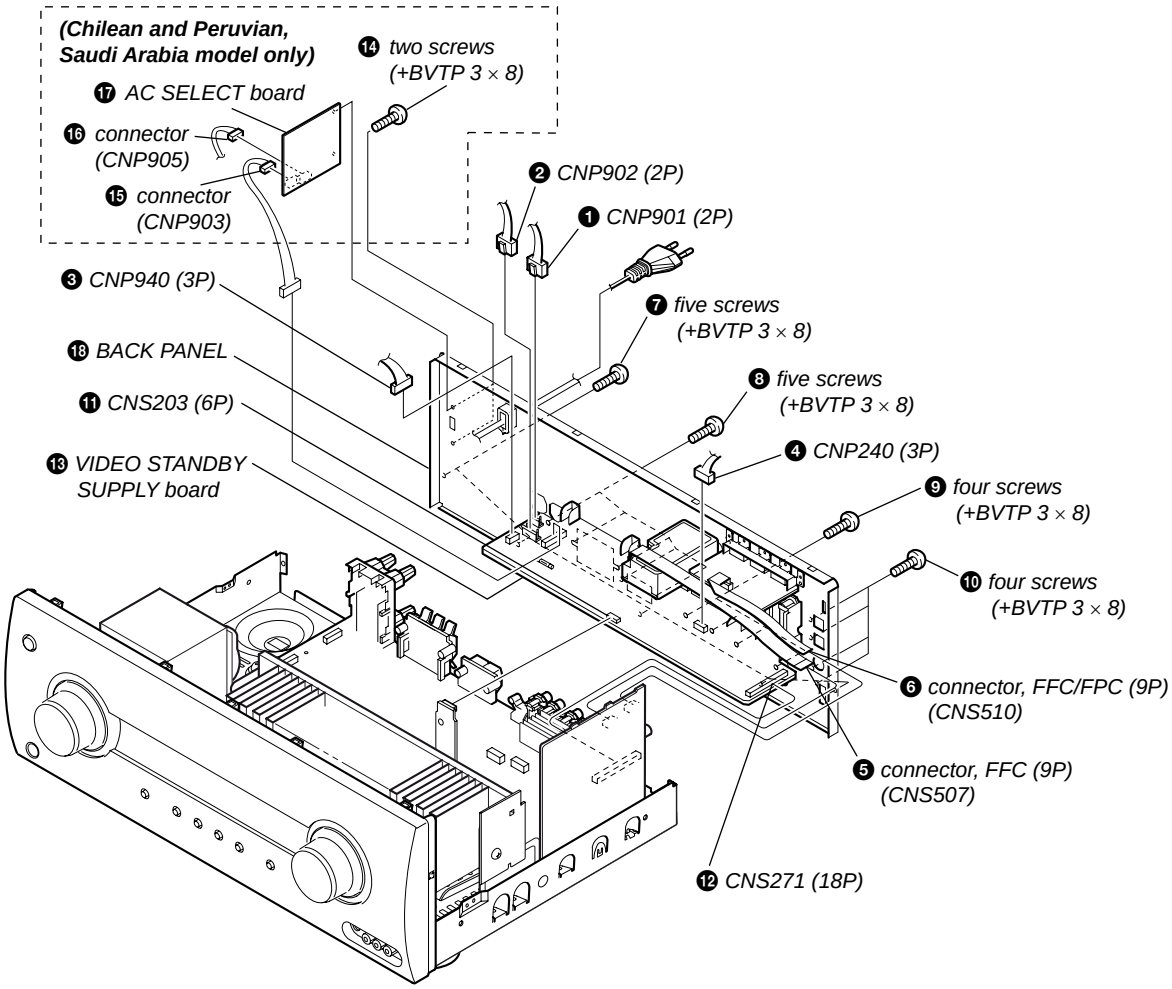

3-4. FRONT PANEL SECTION

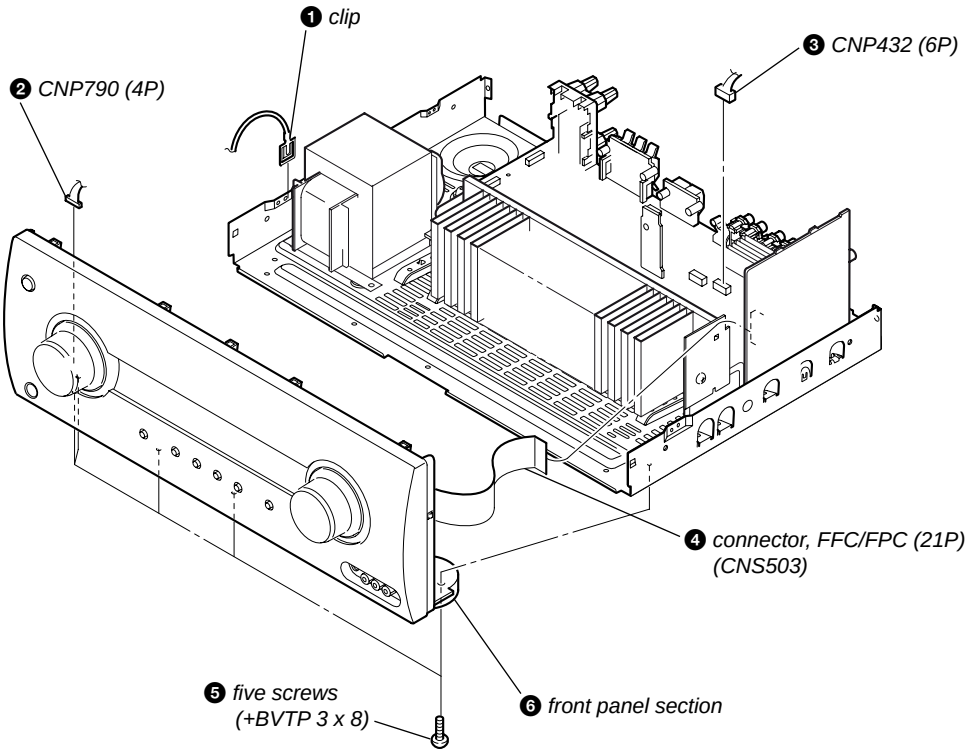

3-5. DIGITAL AB BOARD

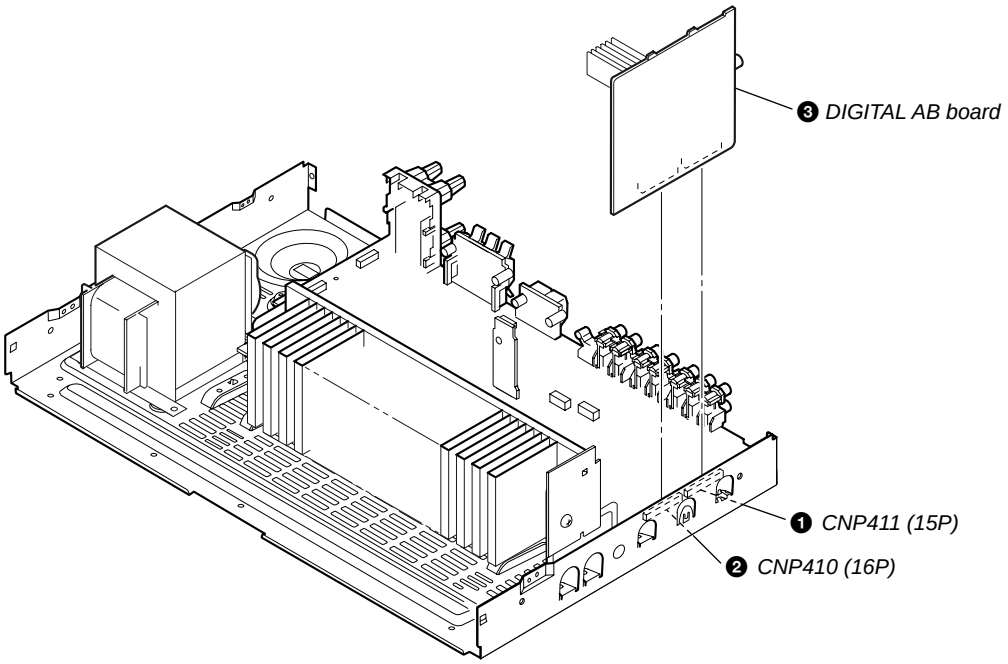

3-6. MAIN BOARD SECTION, TEMP-SENSOR BOARD

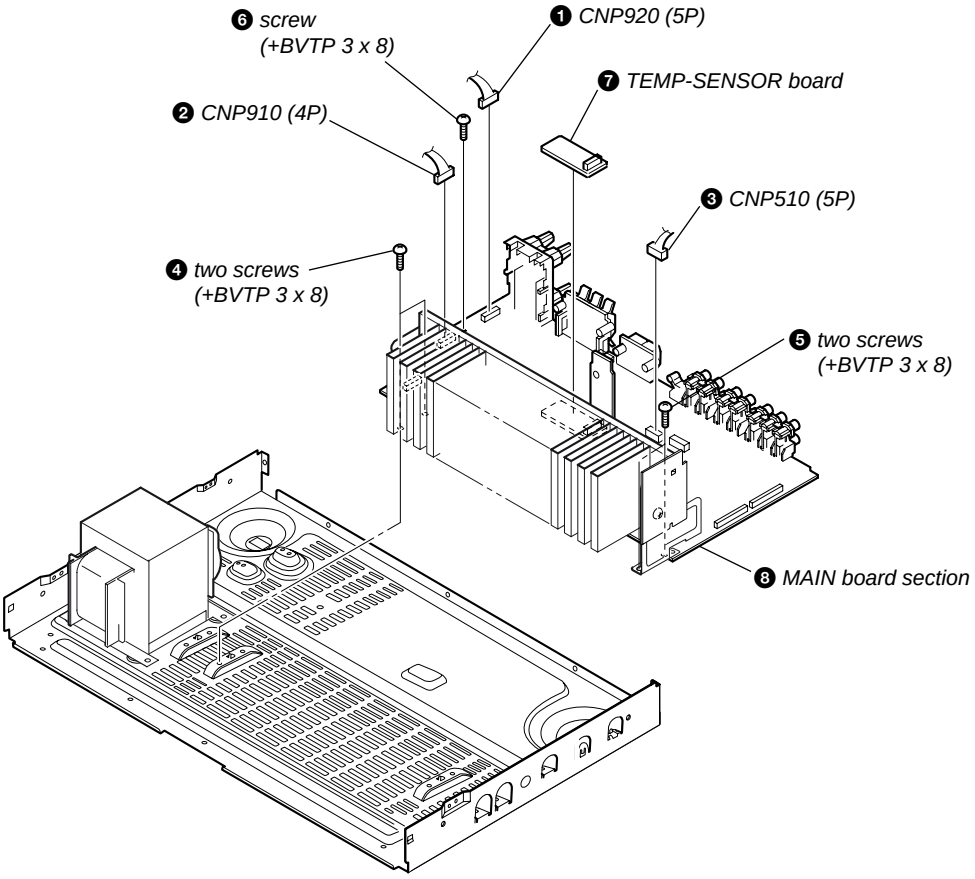

SECTION 4
TEST MODE

TUNER AM STEP CHANGE (9 kHz/10 kHz) MODE (Chilean and Peruvian models only)

The AM tuning interval can be changed over 9 kHz or 10 kHz.

Procedure:

1. Press the [I/⏻] button to turn on the main power.
2. Press [TUNER] repeatedly to select “AM”.
3. Press [AMP MENU].
   “1-LEVEL” appears on the display.
4. Press [↑/↓] repeatedly to select “4-TUNER”.
5. Press [⊕] or [→] to enter the menu.
6. Press [↑/↓] repeatedly to select “AM STEP”.
7. Press [⊕] or [→] to enter the parameter.
8. Press [↑/↓] repeatedly to select the “AM” tuning scale you want.

Note

All AM preset stations will be erased when you change the tuning scale.

FL CHECK MODE

All fluorescent segments are tested. When this test is activated, all segments turn on at the same time, then each segment turns on one after another.

Procedure:

1. When pressing the [MULTI STEREO] and [A.F.D.] buttons, press the [I/⏻] button to turn on the main power.
2. All segments turn on.

3. Turn the [INPUT SELECTOR] dial.
4. Test pattern 1 turn on.

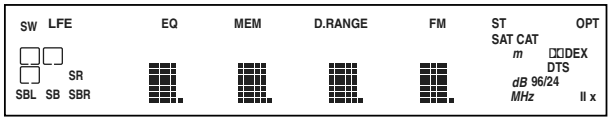

5. Turn the [INPUT SELECTOR] dial once again.
6. Test pattern 2 turn on.

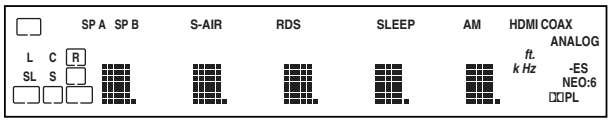

7. Turn the [INPUT SELECTOR] dial once again. All segments turn off.
8. Every turning of the [INPUT SELECTOR] dial turns on each segment one after another on the same order.

S.F. CLEAR MODE

The preset sound filed is cleared when this mode is activated. Use this mode before returning the product to clients upon completion of repair.

Procedure:

1. While pressing the [A.F.D.] button, press the [I/⏻] button to turn on the main power.
2. The message “S.F CLR.” appears and initialization is performed.

VERSION CHECK MODE

When this mode is used the model, the destination and the software version number are displayed.

Procedure:

1. While pressing the [NIGHT MODE] and [GAME] buttons, press the [I/⏻] button to turn on the main power.
2. The model, the distination and the software version number appear.

KEY CHECK MODE

This mode is used to check the key.

Procedure:

1. While pressing the [MUSIC] and [MOVIE] buttons, press the [I/⏻] button to turn on the main power.
2. The message “REST 06” appears.
3. Every pressing of any button other than the [I/⏻] button counts down the buttons. The buttons which are already counted once are not counted again.
4. When all buttons are pressed, the message “REST 00” appears.

SWAP ALL MODE

When this mode is used, output the audio signal of front L/R channel to all channel.

Procedure:

1. While pressing the [MULTI STEREO] and [MOVIE] buttons, press the [I/⏻] button to turn on the main power.
2. The message “SWP. ALL” appears.
3. After a few seconds, “SWAP” appears. (No change while displayed.)

SHIPMENT MODE

All preset contents are cleared when this mode is activated. Use this mode before returning the product to clients upon completion of repair.

Procedure:

1. While pressing the [NIGHT MODE] and [MULTI STEREO] buttons, press the [I/⏻] button to turn on the main power.
2. The message “CLEARING” appears.

DCAC FACTORY TEST MODE

DCAC Factory Test mode have two stages:

1. DCAC DSP Data Line Checking
2. DCAC board Checking

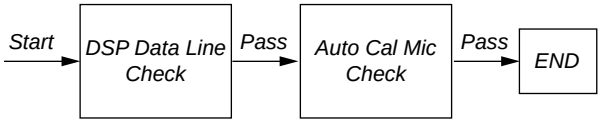

Factory Test System Setup

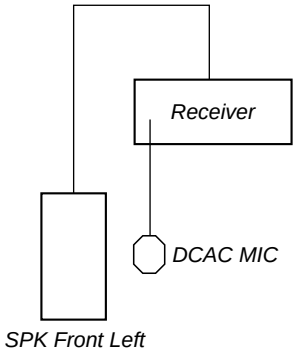

1. When power off :
   While pressing the [GAME] and [MOVIE] buttons, press the [I/⏻] button to turn on the main power .
   “DCAC FTM” appears.
   Afterward, press the [NIGHT MODE] to start DCAC factory test mode.

1. DCAC DSP Data Line Checking

After press the [TUNING MODE] button, DCAC Factory test mode will start, below display will show:

"DCAC x" x = 1, 2, 3, 4

If there is error happen, below display will show:

"ERR SD0x" x = 1 → D1501 or R1530 problem
x = 2 → D1502 problem
x = 3 → D1503 problem
x = 4 → D1504 problem

2. DCAC board Checking

Connect front left speaker of the receiver and AUTO CAL microphone. Turn [MASTER VOLUME] jog, there will be test tone sound output from front left speaker, and the display will change accordingly.

"AD - xxx" xxx = 0 to 255 (depends on loudness of test tone)

Note

When the value reaches more than 222, the test tone will muted (for production line checking). Thus, the AD value will drop to 0. To check the AD value again, power off the receiver and re-enter the test mode.

VACS CONTROL TEST MODE

The VACS feature of the amplifier is turned off purposely.

Procedure:

1. While pressing the [MUSIC] and [A.F.D.] buttons, press the [I/⏻] button to turn on the main power.
2. The message "VACS OFF" appears.

HISTORY MODE

The state that the set is used is memorized.

Procedure:

1. While depressing the [GAME] and the [A.F.D.] buttons simultaneously, press the [I/⏻] button to turn on the main power.
2. "HISTORY" appears.
3. Each time the [↑] / [↓] buttons on the remote commander is pressed, the item is switched in order as follows.

Items	
Protector Count	COUNT XX
Total single power on time	SXXXHXXM
Sound Field	SND FLD
Input function	FUNCTION
Input Mode	INP MODE
Digital Select	DIGI IN
Stream information	STREAM
Signal configuration	CO XXXXX
Headphone	HP XXX
Volume	VOL XXX
Bass Setting	BASS XXX
Treble Setting	TREB XXX
Front Level Setting	F XXX
Center Level Setting	CT XXX
Surround Left Level Setting	SL XXX
Surround Right Level Setting	SR XXX
Surround Back Level Setting	SB XXX
Subwoofer Level Setting	SW XXX
Total power on time	TXXXHXXM
Muting status	MUTE XXX
Power on counter (Rebox test mode)	P.W. XXX
Protector Type	PRT XXXX
Temperature when protect	TEM XXXC

PROTECTOR AUTO OFF

* To disable auto off after protector occur.

Procedure:

1. While depressing the [NIGHT MODE] and the [MUSIC] buttons simultaneously, press the power [I/⏻] button to turn on the main power.
2. "PROTEVER" appears.

SECTION 5
ELECTRICAL CHECK

FM AUTO STOP CHECK

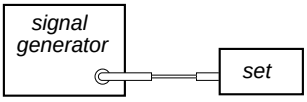

Procedure:

1. Turn on the set.
2. Input the following signal from signal generator to FM antenna input directly.

Carrier frequency : A = 87.5 MHz, B = 98 MHz, C = 108 MHz
Deviation : 75 kHz
Modulation : 1 kHz
ANT input : 1 kHz

Note: Use 75 ohm coaxial cable to connect signal generator and the set.
You cannot use video cable for checking.
Use signal generator whose output impedance is 75 ohm.

3. Set to FM tuner function and scan the input FM signal with automatic scanning.
4. Confirm that input frequency of A, B and C are detected and automatic scanning stops.

When the station signal is received in good condition, automatic scanning stops.

SECTION 6
DIAGRAMS

• Circuit Boards Location

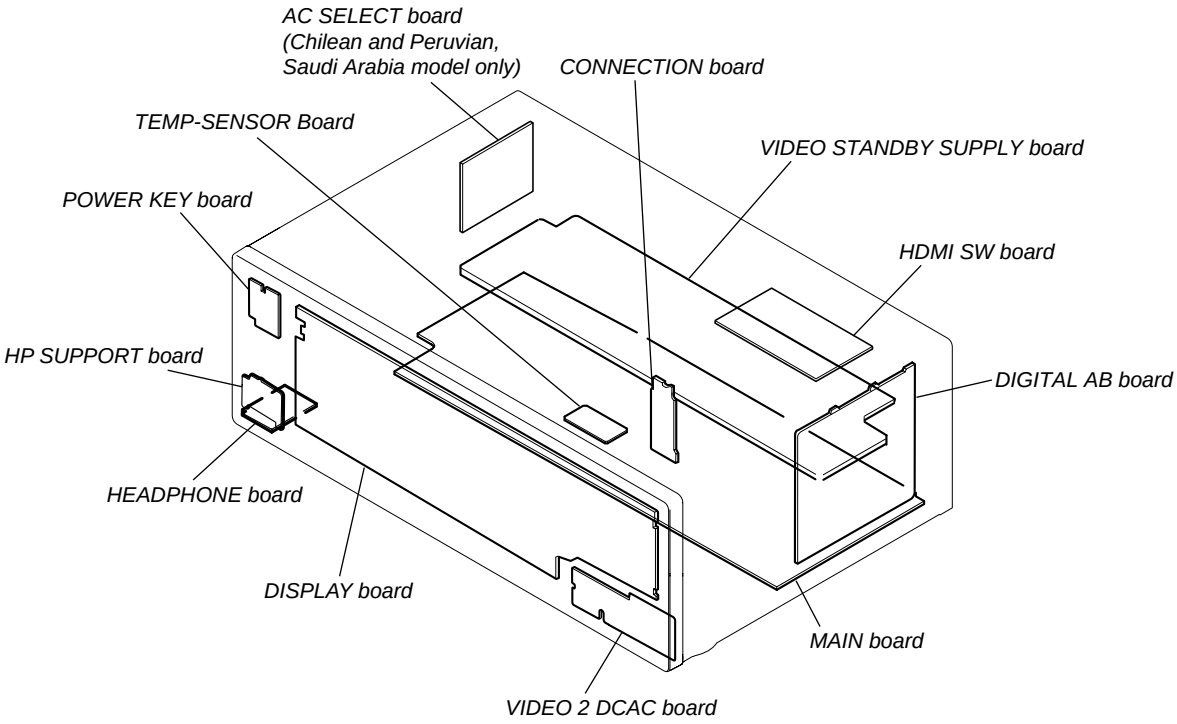

6-1. BLOCK DIAGRAM – TUNER/AUDIO Section –

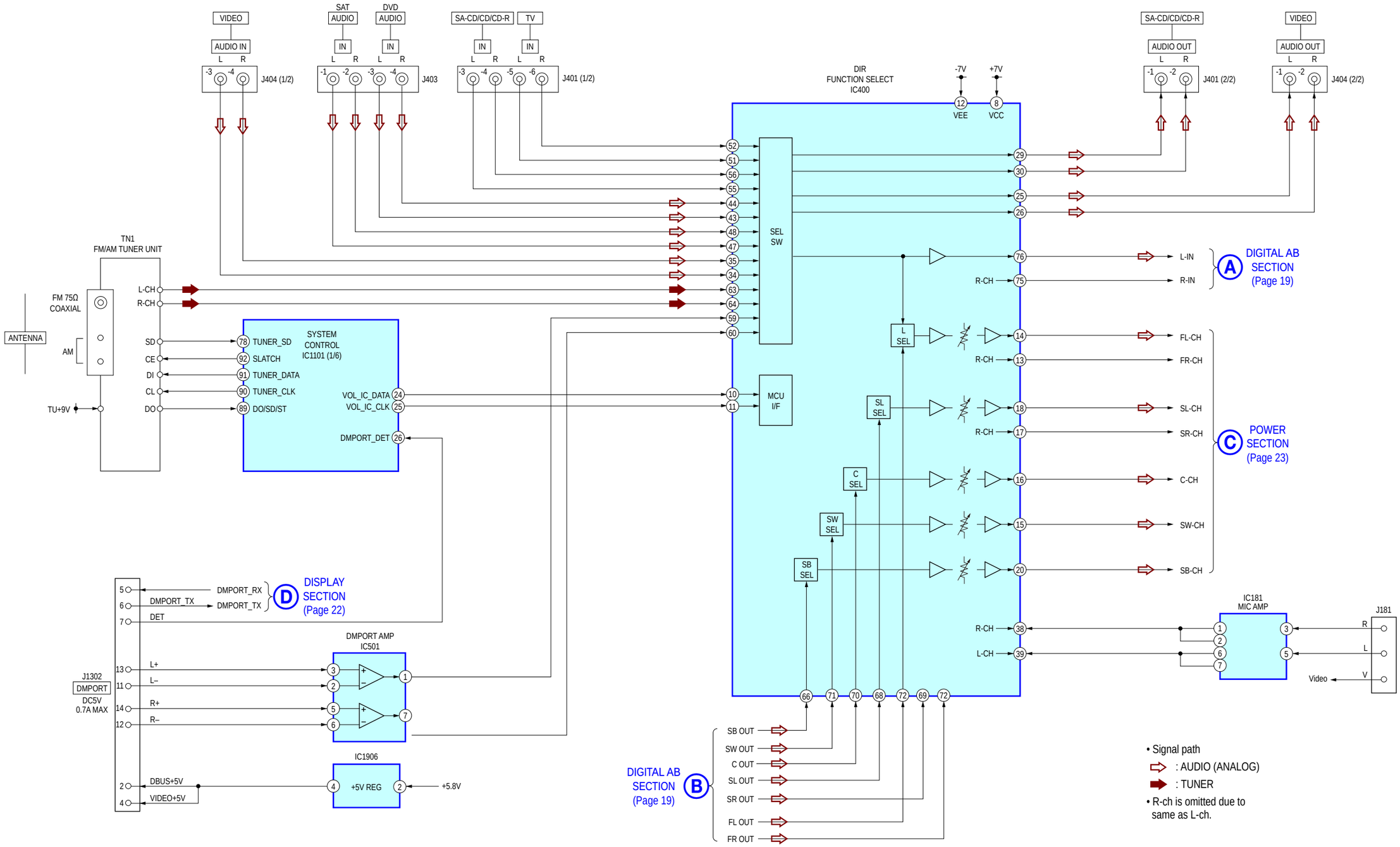

6-2. BLOCK DIAGRAM – DIGITAL AB Section –

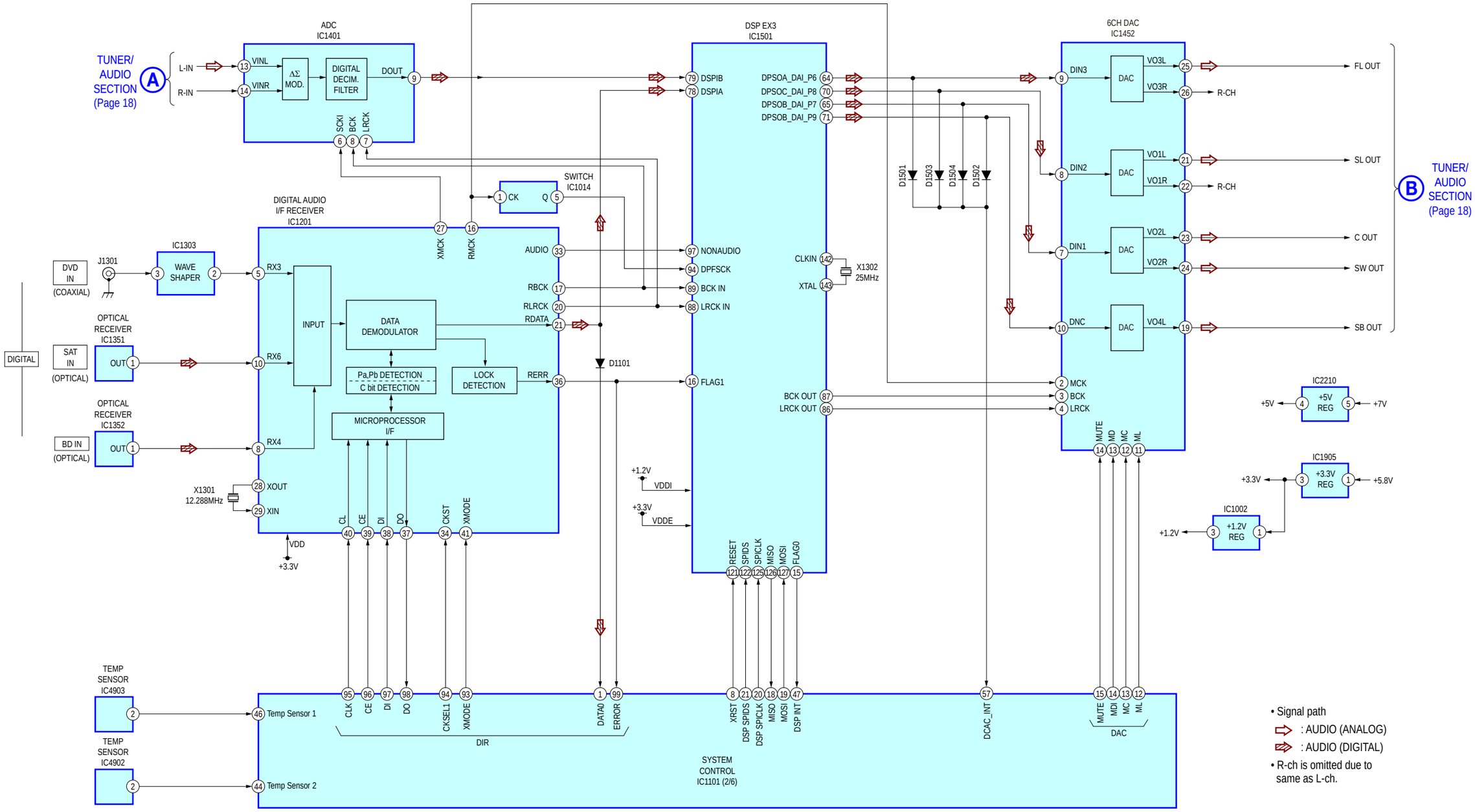

6-3. BLOCK DIAGRAM – VIDEO Section –

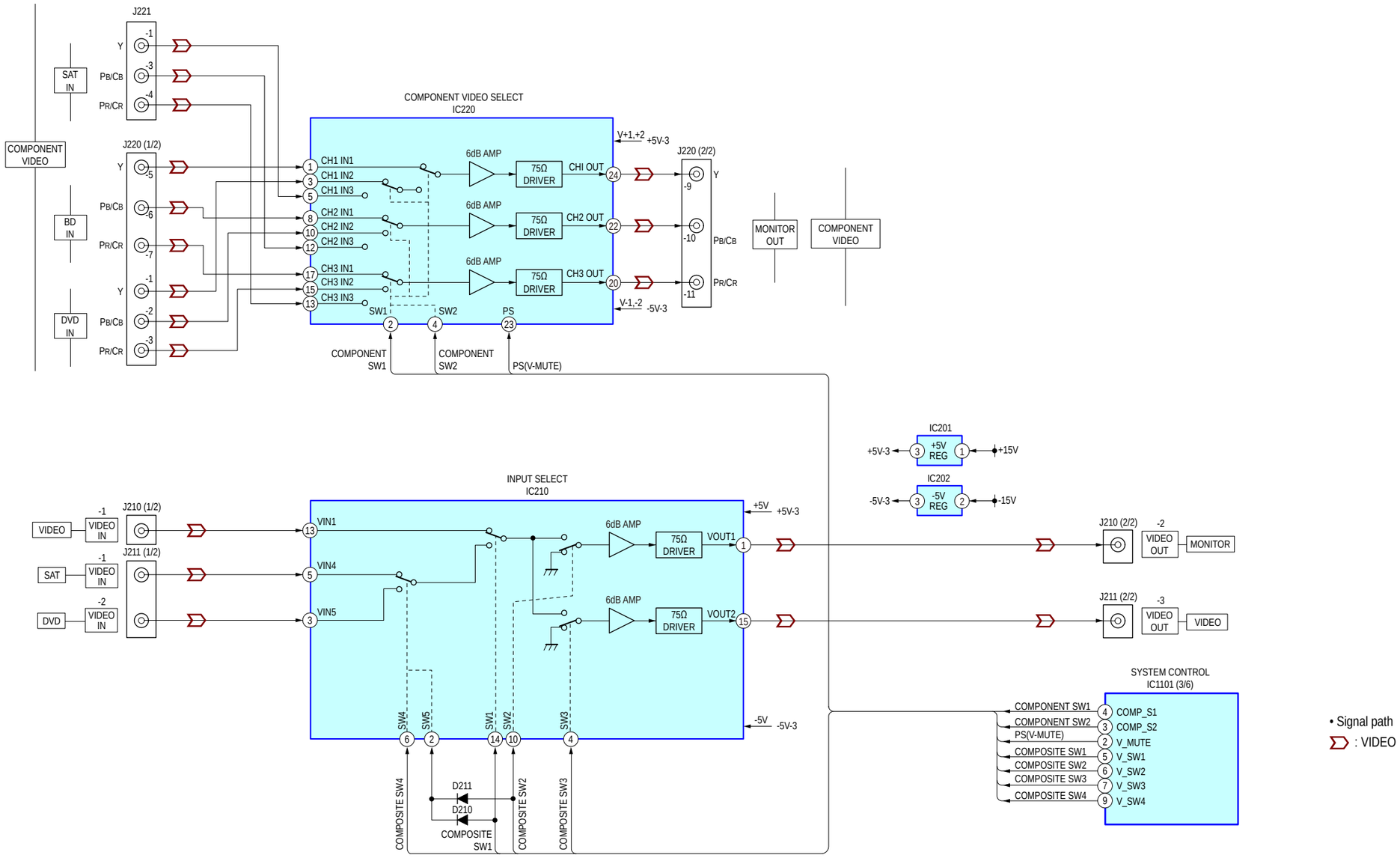

• Signal path
: VIDEO

6-4. BLOCK DIAGRAM – HDMI Section –

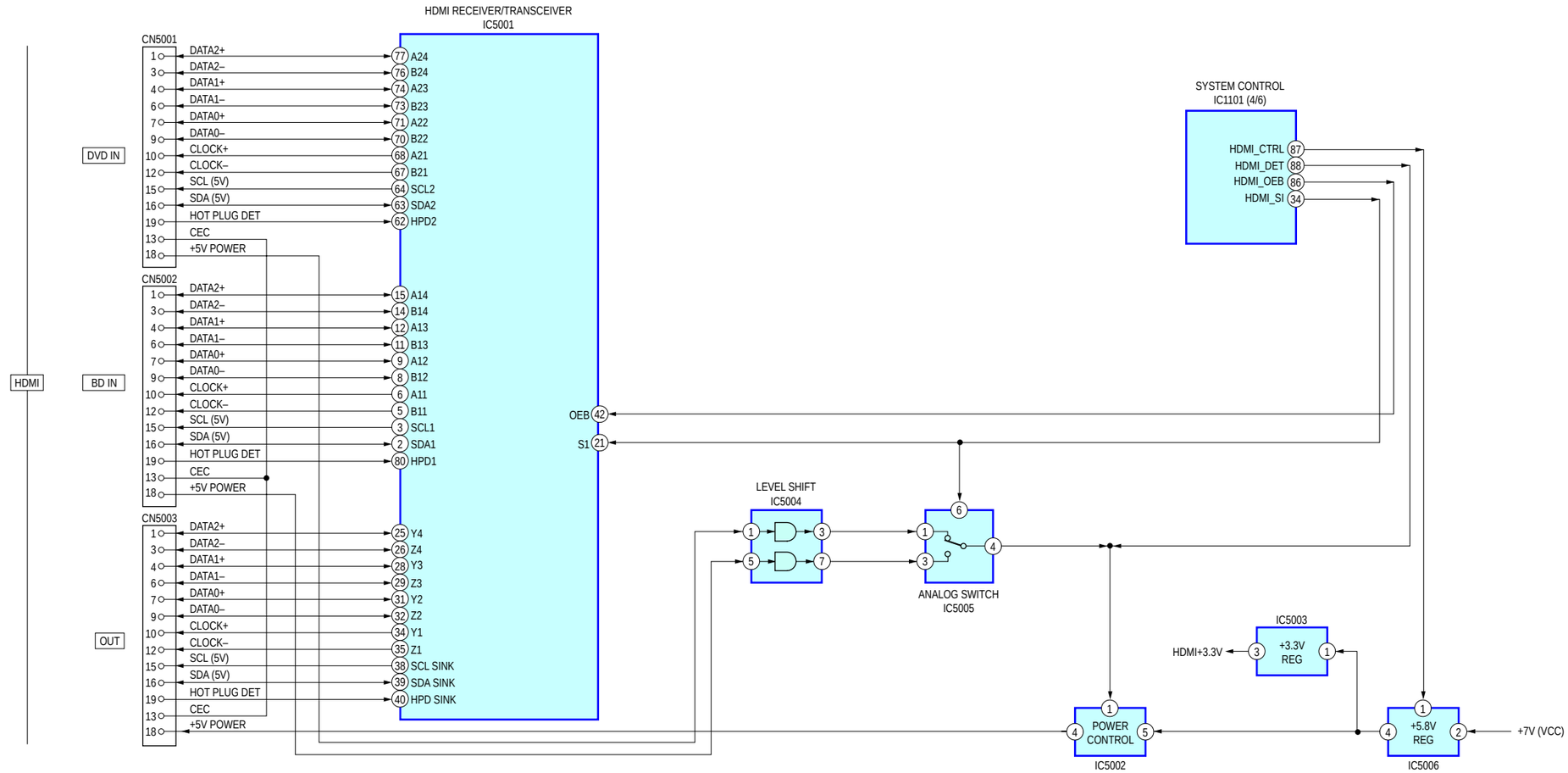

6-5. BLOCK DIAGRAM – KEY/DISPLAY Section –

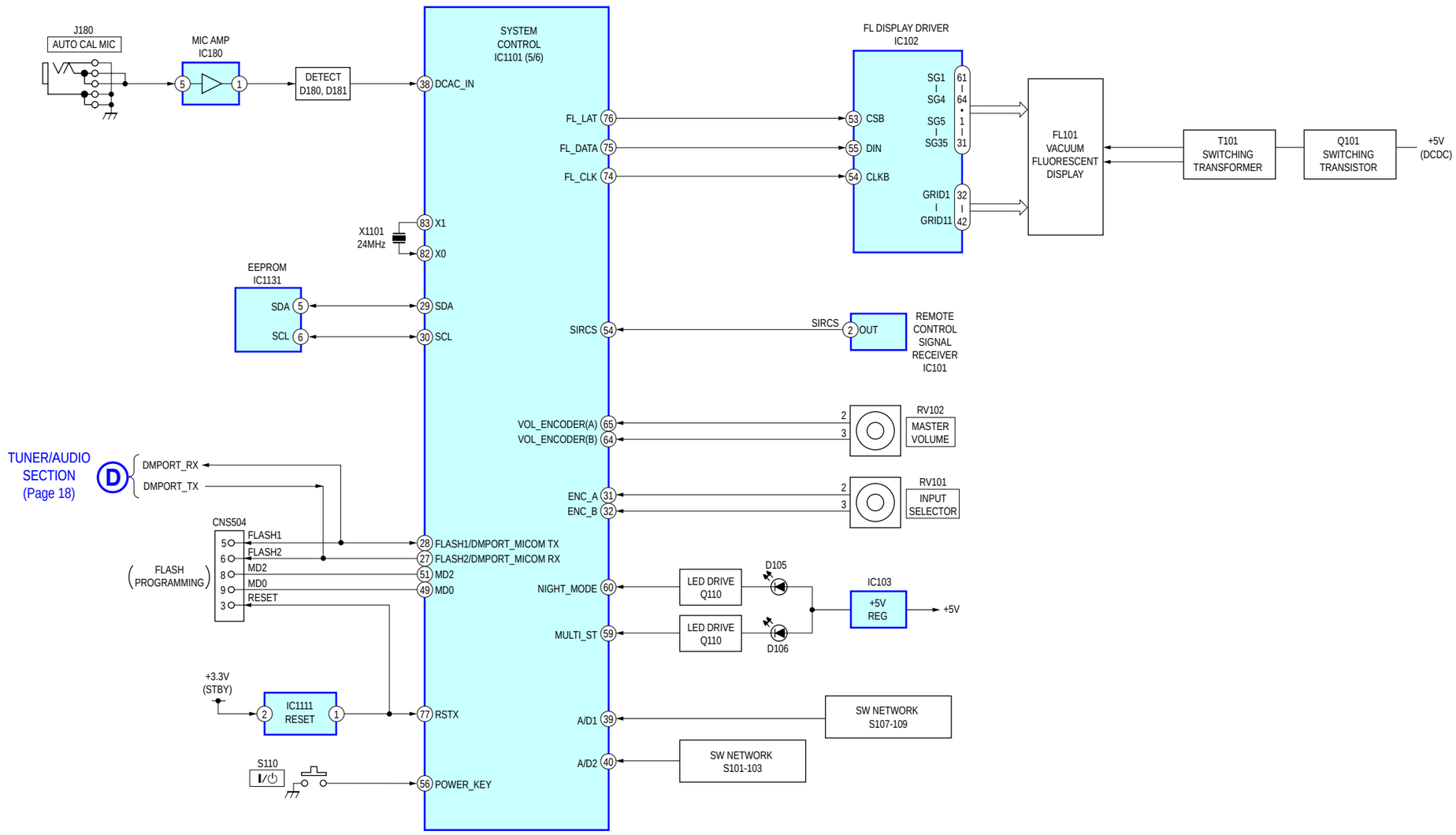

6-6. BLOCK DIAGRAM – POWER Section –

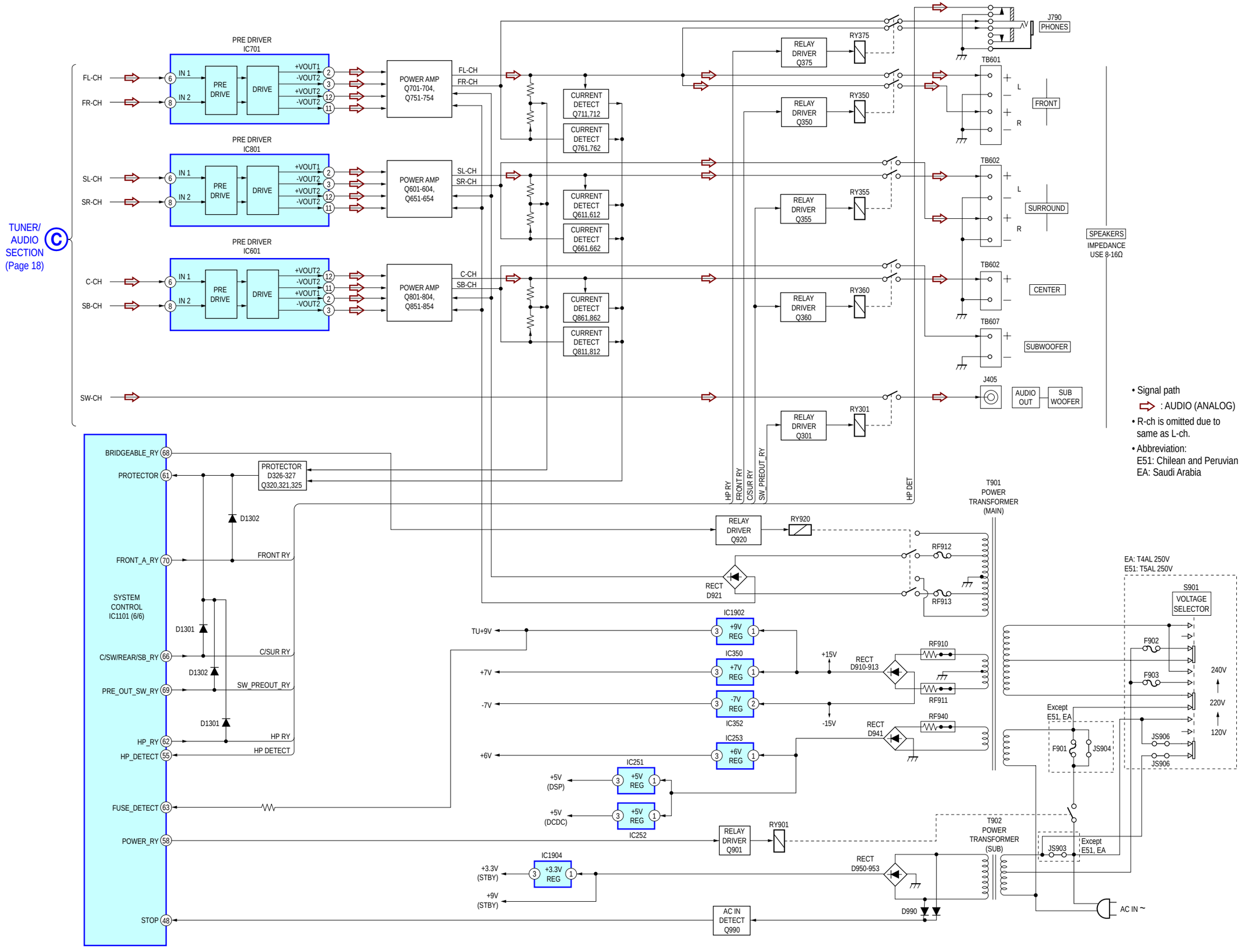

- Signal path
  ⇨ : AUDIO (ANALOG)
- R-ch is omitted due to same as L-ch.
- Abbreviation:
  E51: Chilean and Peruvian
  EA: Saudi Arabia

THIS NOTE IS COMMON FOR PRINTED WIRING BOARDS AND SCHEMATIC DIAGRAMS.
(In addition to this, the necessary note is printed in each block.)

For Printed Wiring Boards.

Note:

- ○——— : Parts extracted from the component side.
- △ : internal component.
- ▭ : Pattern from the side which enables seeing.

Caution:	
Parts face side: (SIDE A)	Parts on the parts face side seen from the parts face are indicated.
Pattern face side: (SIDE B)	Parts on the pattern face side seen from the pattern face are indicated.

- Abbreviation
  AR : Argentina model
  E51 : Chilean and Peruvian models
  MY : Malaysia model
  SAF : South African model
  SP : Singapore model

For Schematic Diagrams.

Note:

- All capacitors are in μF unless otherwise noted. (p: pF) 50 WV or less are not indicated except for electrolytics and tantalums.
- All resistors are in Ω and 1/4 W or less unless otherwise specified.
- △ : internal component.
- : nonflammable resistor.
- : fusible resistor.
- ▭ : panel designation.

Note:	**Note:**
The components identified by mark ⚠ or dotted line with mark ⚠ are critical for safety. Replace only with part number specified.	Les composants identifiés par une marque ⚠ sont critiques pour la sécurité. Ne les remplacer que par une piéce portant le numéro spécifié.

- ▬▬ : B+ Line.
- ▬ ▬ ▬ : B– Line.
- Voltages and waveforms are dc with respect to ground under no-signal (detuned) conditions.
  no mark: FM
- Voltages are taken with VOM (Input impedance 10 MΩ). Voltage variations may be noted due to normal production tolerances.
- Waveforms are taken with an oscilloscope. Voltage variations may be noted due to normal production tolerances.
- Circled numbers refer to waveforms.
- Signal path.
  ⇨ : TUNER (FM/AM)
  ⇨ : VIDEO (AUDIO)
  ⇨ : VIDEO
  ⇨ : DVD (DIGITAL)
  ⇨ : CD (ANALOG)
- Abbreviation
  AR : Argentina model
  E51 : Chilean and Peruvian models
  EA : Saudi Arabia model
  MY : Malaysia model
  SAF : South African model
  SP : Singapore model

- **Waveforms**

– DIGITAL AB Board –

① IC1201 ⑯ (RMCK)

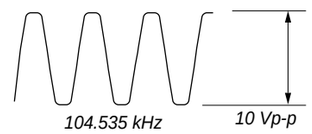

2 V/DIV, 10 msec/DIV

② IC1201 ⑰ (RBCK)

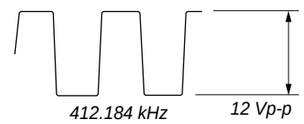

2 V/DIV, 10 msec/DIV

③ IC1201 ㉘ (XOUT)

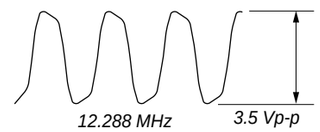

1 V/DIV, 50 nsec/DIV

④ IC1501 ㊸ (XTAL)

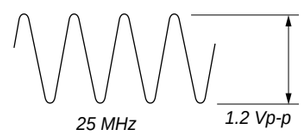

1 V/DIV, 50 nsec/DIV

⑤ IC1101 ㊸ (X1)

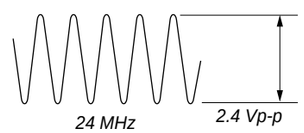

1 V/DIV, 50 nsec/DIV

6-7. PRINTED WIRING BOARDS – MAIN Section –

• See page 17 for Circuit Boards Location. • : Uses unleaded solder.

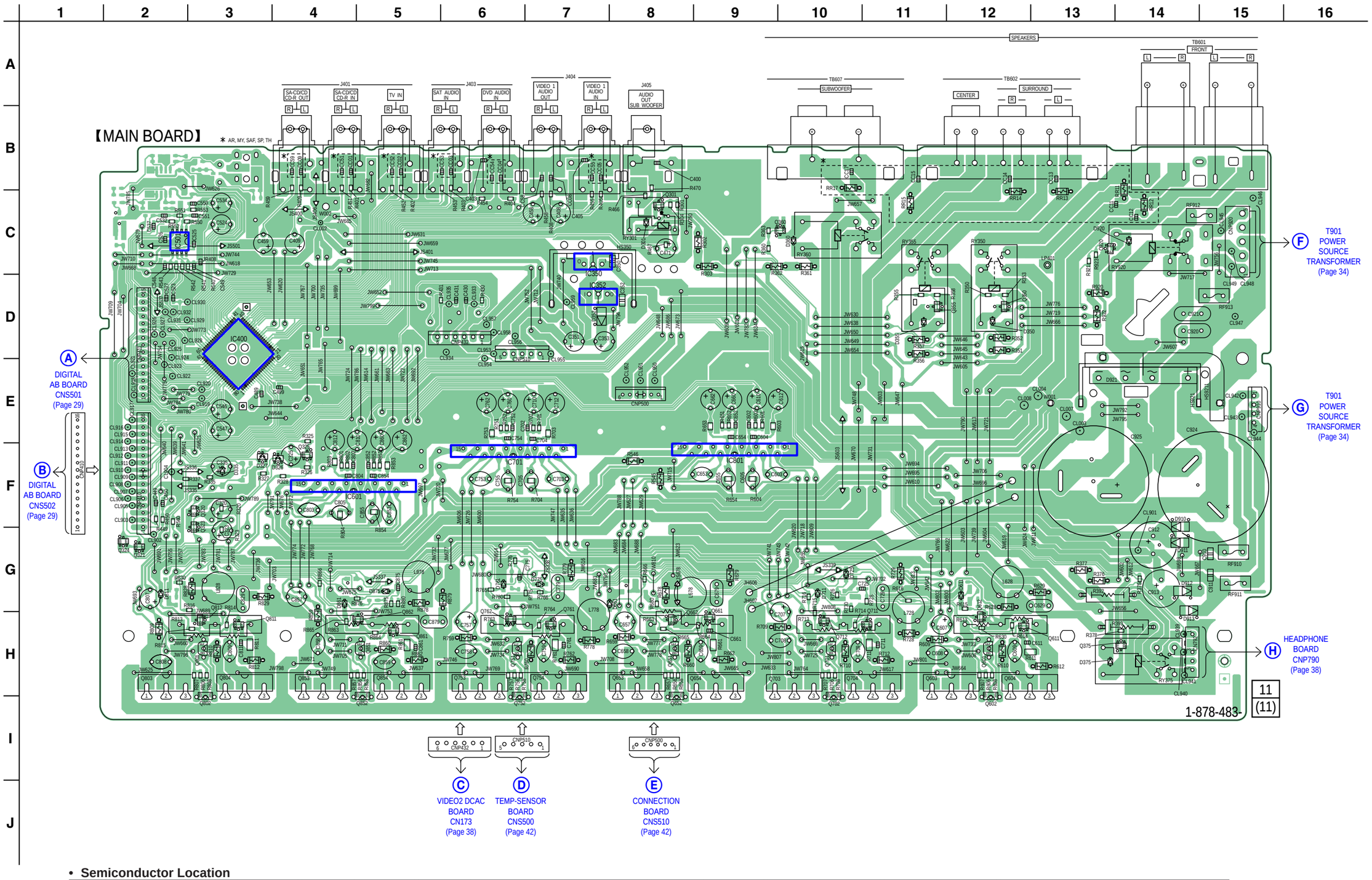

• **Semiconductor Location**

Ref. No.	Location	Ref. No.	Location	Ref. No.	Location	Ref. No.	Location	Ref. No.	Location	Ref. No.	Location	Ref. No.	Location	Ref. No.	Location	Ref. No.	Location	Ref. No.	Location	Ref. No.	Location
D301	C-8	D375	H-13	D861	G-4	IC350	C-7	Q301	C-8	Q360	C-9	Q651	H-8	Q703	H-9	Q761	H-7	Q853	H-4
D326	F-4	D611	G-12	D875	G-5	IC352	D-7	Q320	F-3	Q375	H-14	Q652	H-8	Q704	H-10	Q762	H-6	Q854	H-5
D327	F-3	D661	G-7	D910	F-14	IC400	D-3	Q321	G-2	Q601	H-12	Q653	H-8	Q711	H-10	Q801	H-3	Q861	H-5
D335	F-3	D711	G-10	D911	G-14	IC501	C-2	Q323	F-3	Q602	H-12	Q654	H-8	Q712	H-10	Q802	H-3	Q862	H-4
D350	D-12	D725	G-10	D912	G-14	IC601	F-4	Q324	G-2	Q603	H-11	Q661	H-9	Q751	H-6	Q811	H-3	Q920	C-13
D352	D-7	D761	G-6	D913	G-14	IC701	F-6	Q325	F-4	Q604	H-12	Q662	H-8	Q752	H-6	Q812	H-3		
D355	D-11	D775	G-7	D920	C-14	IC801	F-9	Q350	D-12	Q611	H-12	Q701	H-10	Q753	H-6	Q851	H-5		
D360	C-10	D811	G-2	D922	E-13			Q355	D-11	Q612	H-12	Q702	H-10	Q754	H-7	Q852	H-5		

6-8. SCHEMATIC DIAGRAM – MAIN Section (1/3) – • See page 42 for IC Block Diagrams.

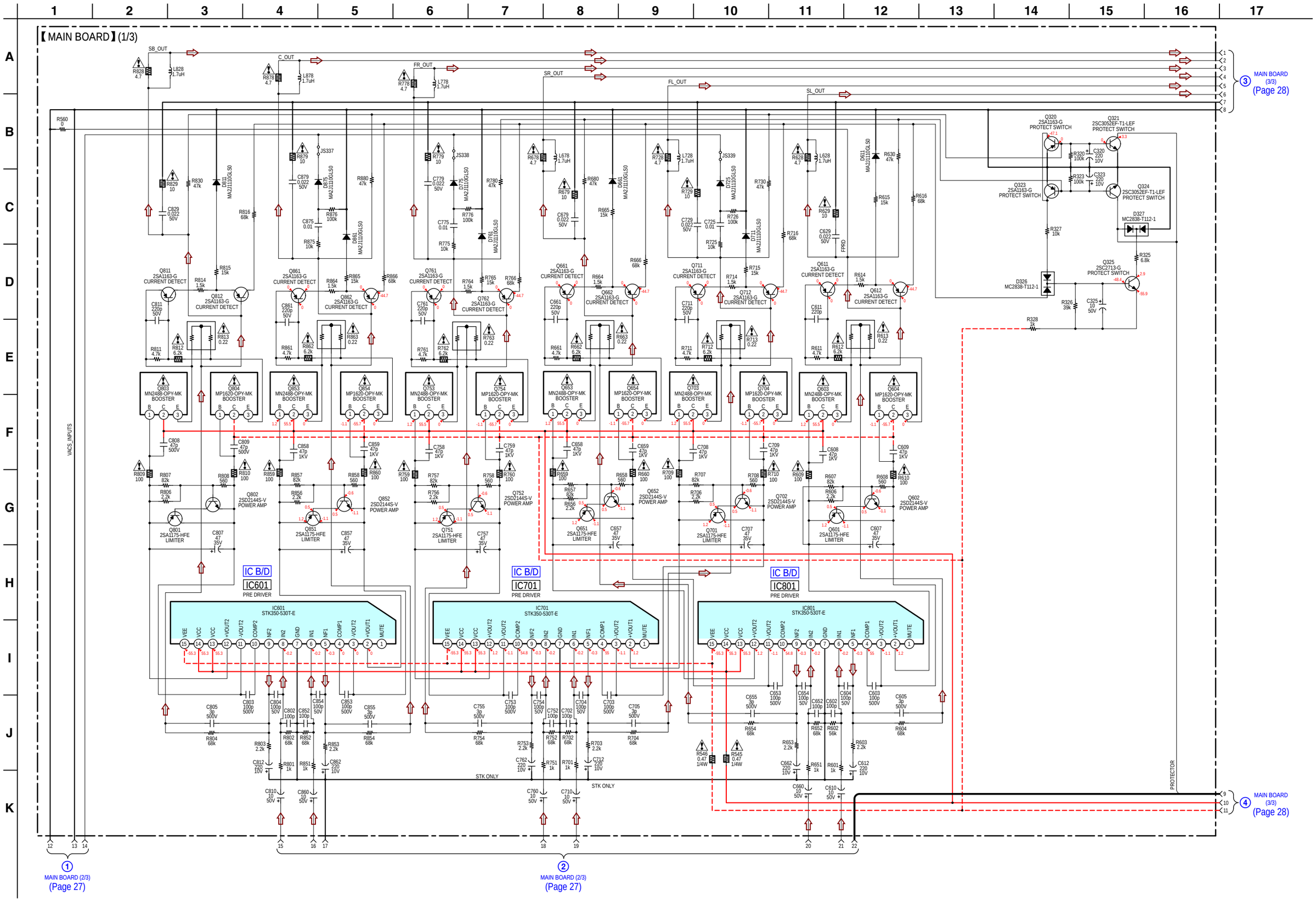

6-9. SCHEMATIC DIAGRAM – MAIN Section (2/3) – • See page 42 for IC Block Diagrams.

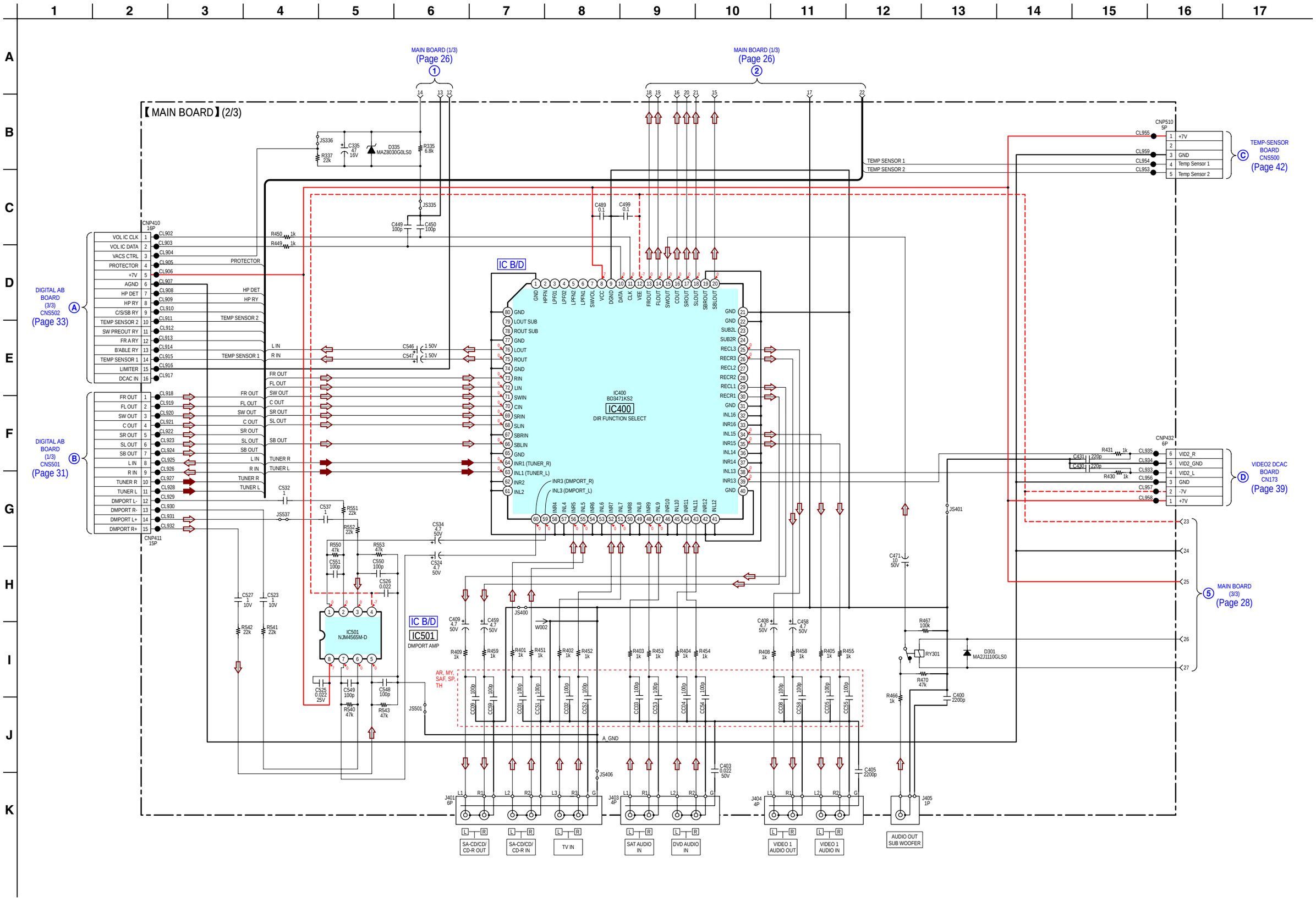

6-10. SCHEMATIC DIAGRAM – MAIN Section (3/3) –

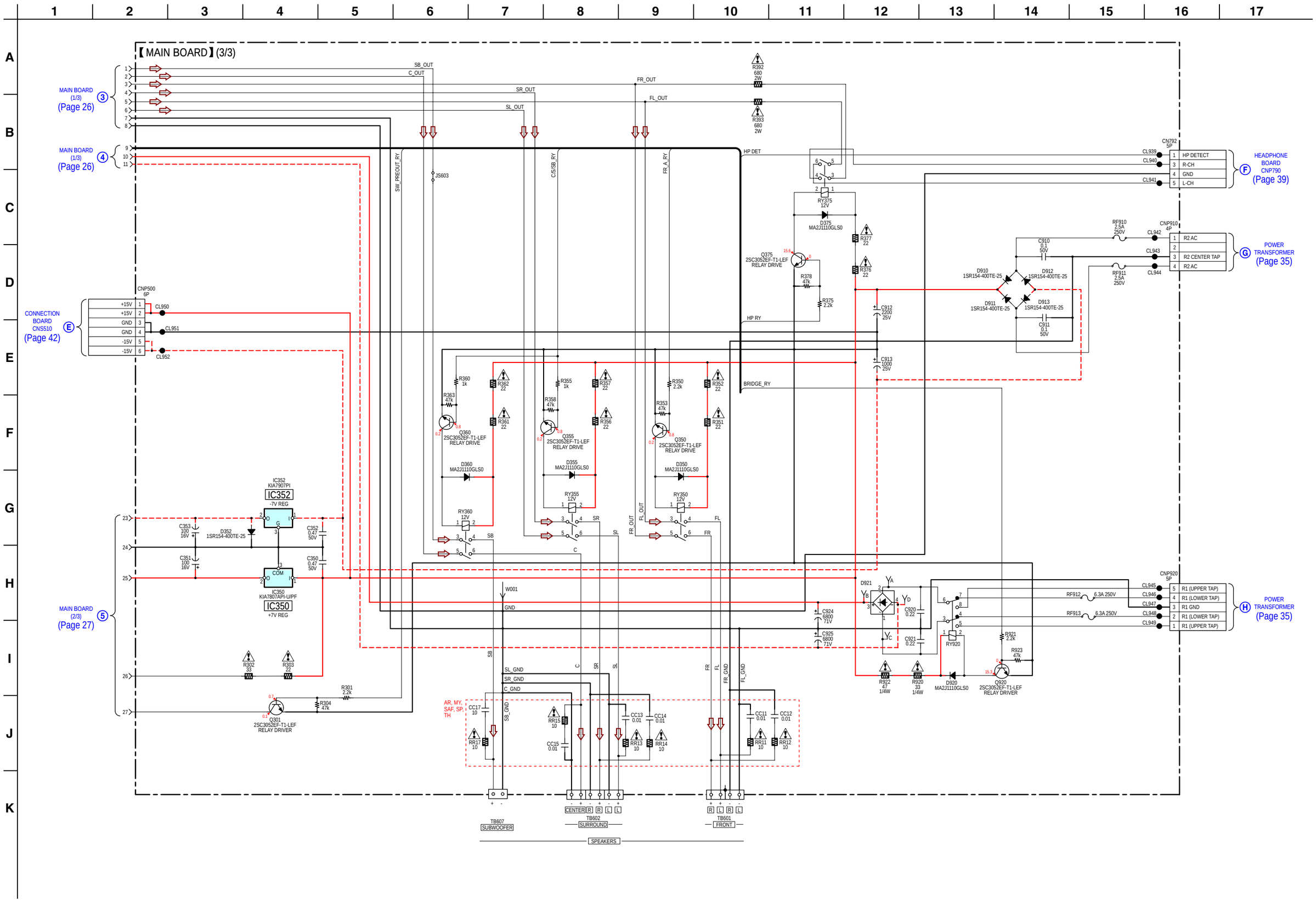

6-11. PRINTED WIRING BOARD – DIGITAL AB Section (1/2) –

• See page 17 for Circuit Boards Location. • : Uses unleaded solder.

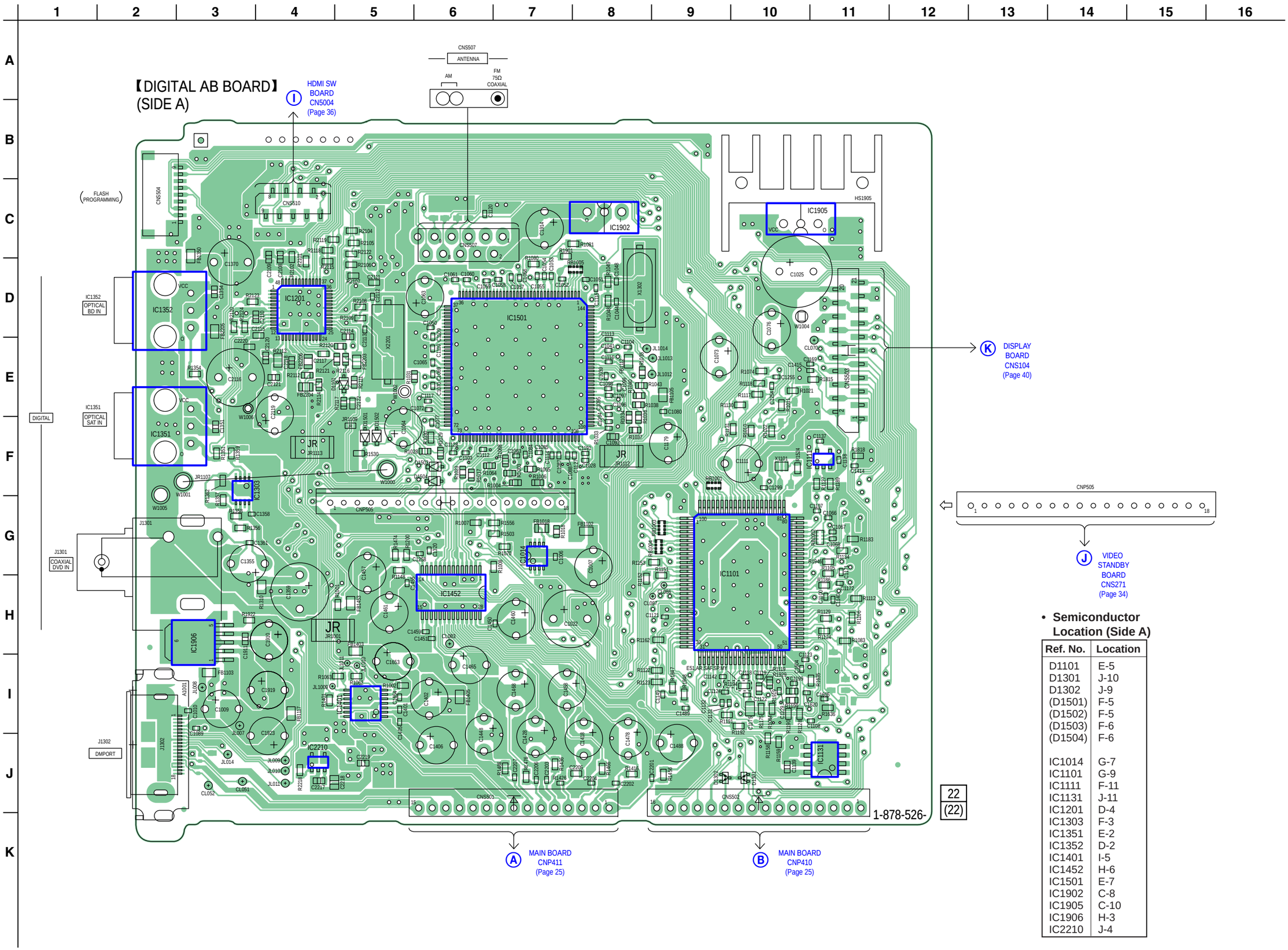

22
(22)

• **Semiconductor Location (Side A)**

Ref. No.	Location
D1101	E-5
D1301	J-10
D1302	J-9
(D1501)	F-5
(D1502)	F-5
(D1503)	F-6
(D1504)	F-6
IC1014	G-7
IC1101	G-9
IC1111	F-11
IC1131	J-11
IC1201	D-4
IC1303	F-3
IC1351	E-2
IC1352	D-2
IC1401	I-5
IC1452	H-6
IC1501	E-7
IC1902	C-8
IC1905	C-10
IC1906	H-3
IC2210	J-4

6-12. PRINTED WIRING BOARD – DIGITAL AB Section (2/2) –

• See page 17 for Circuit Boards Location.

• : Uses unleaded solder.

【DIGITAL AB BOARD】(SIDE B)

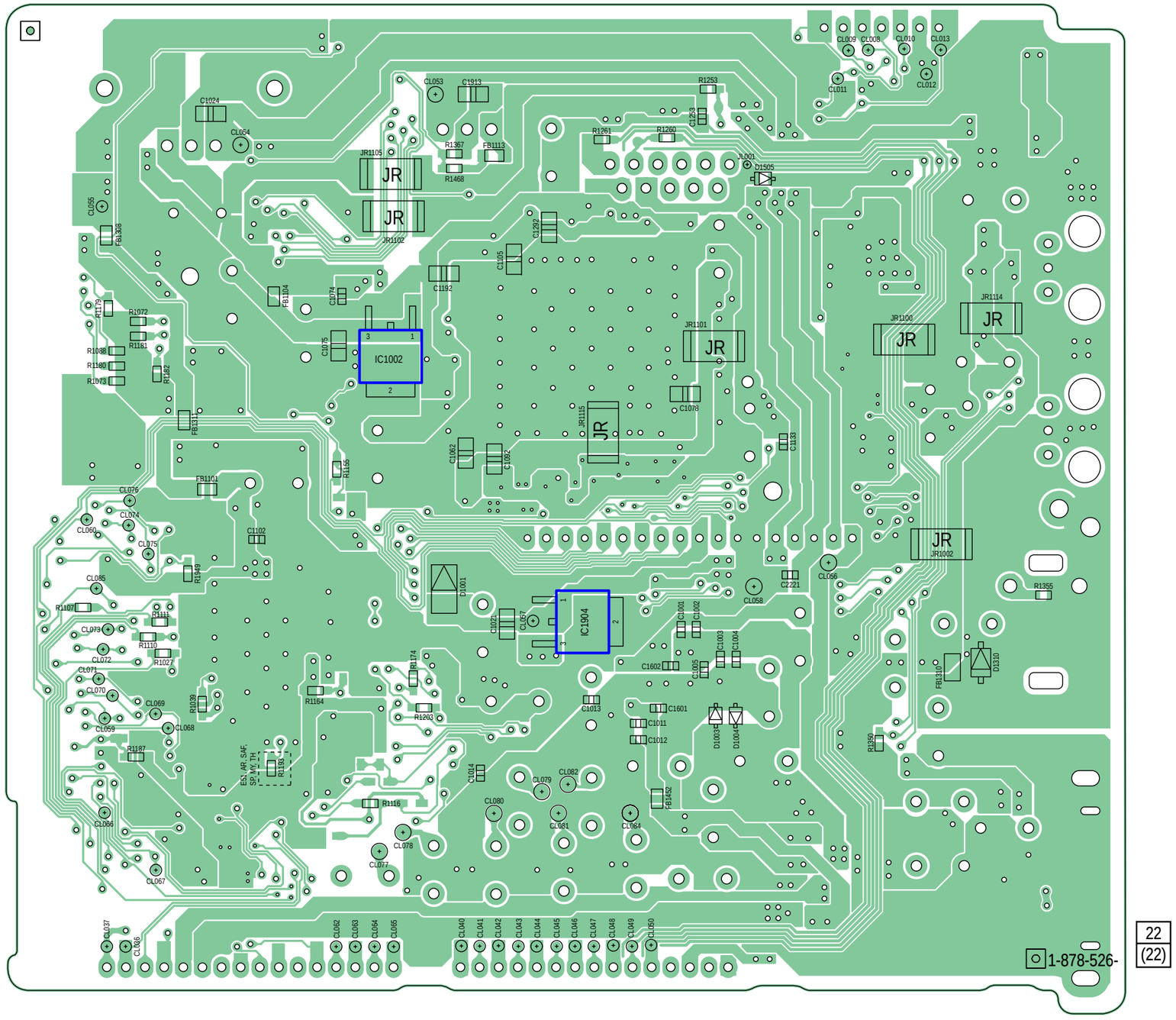

• **Semiconductor Location (Side B)**

Ref. No.	Location
D1001	G-6
D1003	H-9
D1004	H-9
D1505	C-9
IC1002	D-6
IC1904	G-7

6-13. SCHEMATIC DIAGRAM – DIGITAL AB Section (1/3) –

• See page 23 for Waveforms. • See page 43, 44 for IC Block Diagrams.

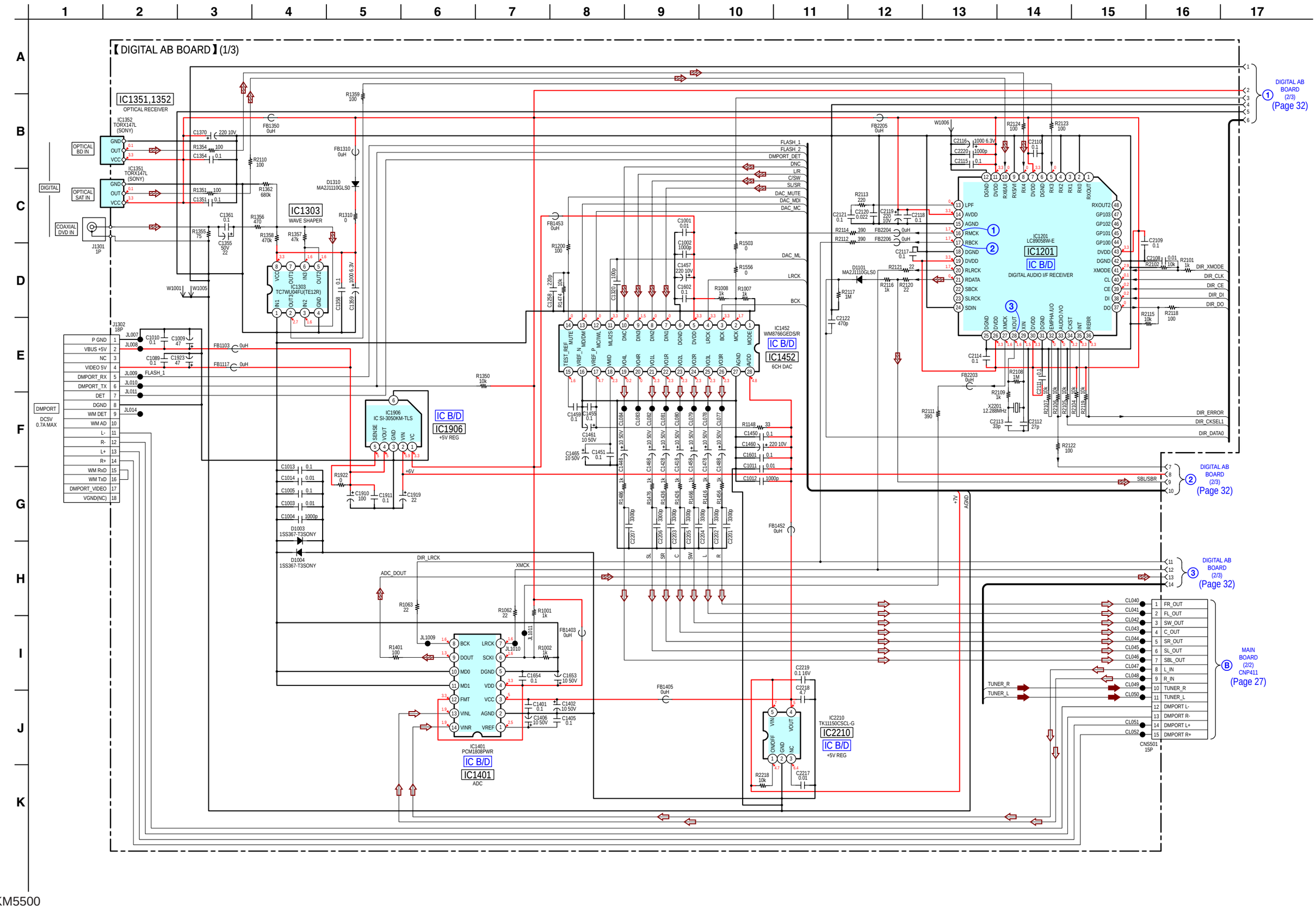

6-14. SCHEMATIC DIAGRAM – DIGITAL AB Section (2/3) –

• See page 23 for Waveforms. • See page 45 for IC Block Diagrams. • See page 50 for IC Pin Function Descriptions.

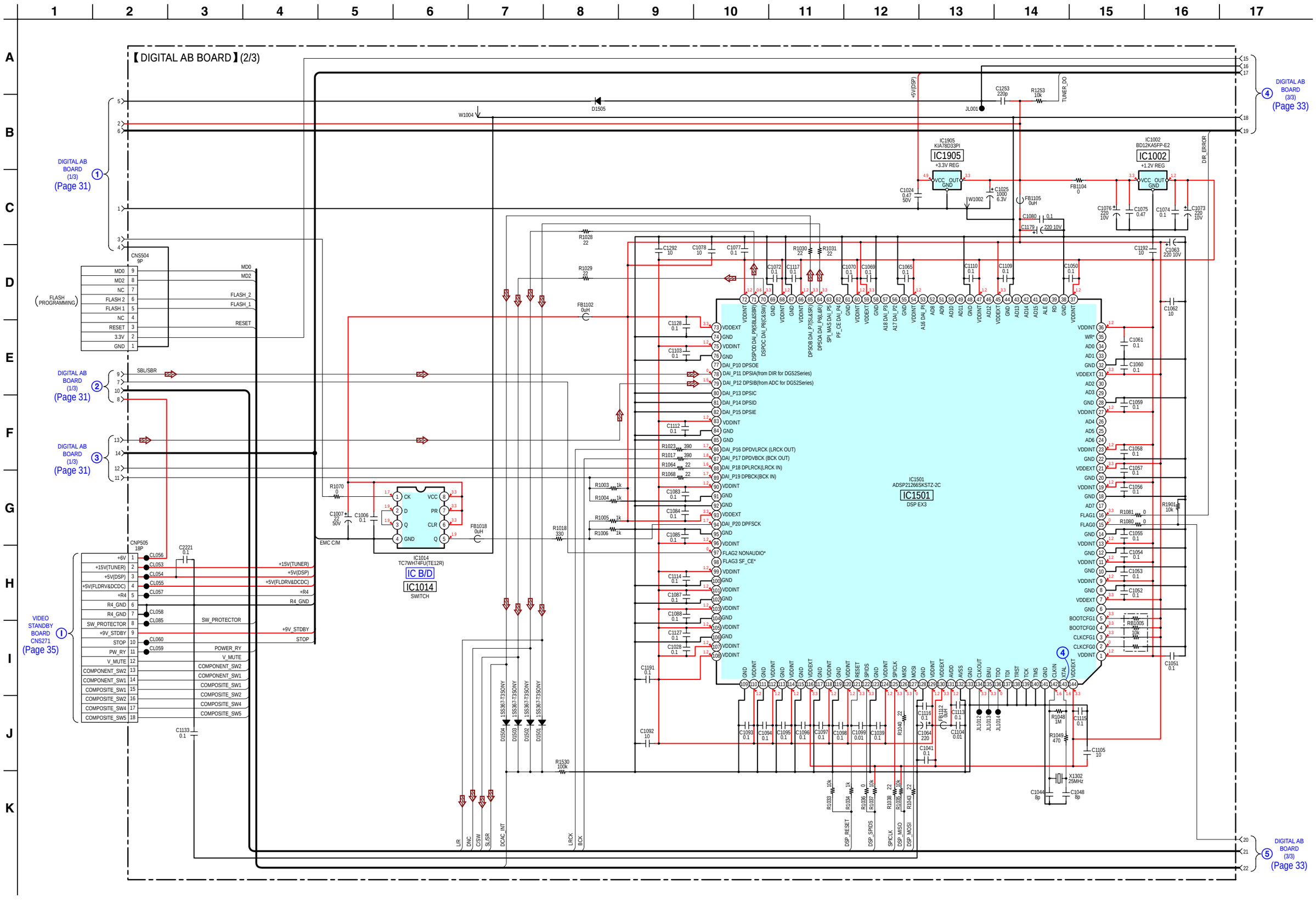

6-15. SCHEMATIC DIAGRAM – DIGITAL AB Section (3/3) –

• See page 23 for Waveforms. • See page 45 for IC Block Diagrams. • See page 48 for IC Pin Function Descriptions.

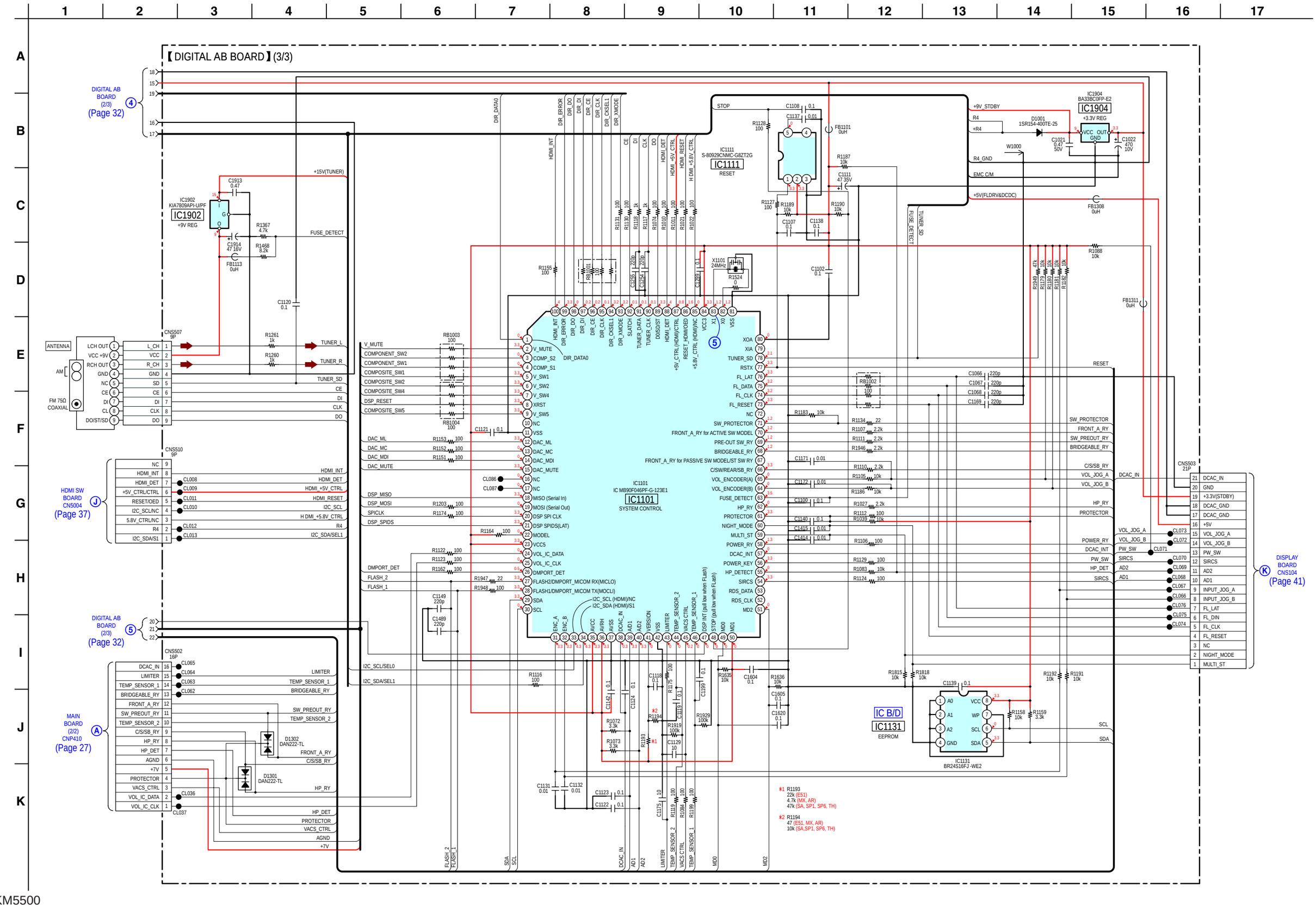

6-16. PRINTED WIRING BOARD – VIDEO STANDBY SUPPLY Section –

• See page 17 for Circuit Boards Location. • : Uses unleaded solder.

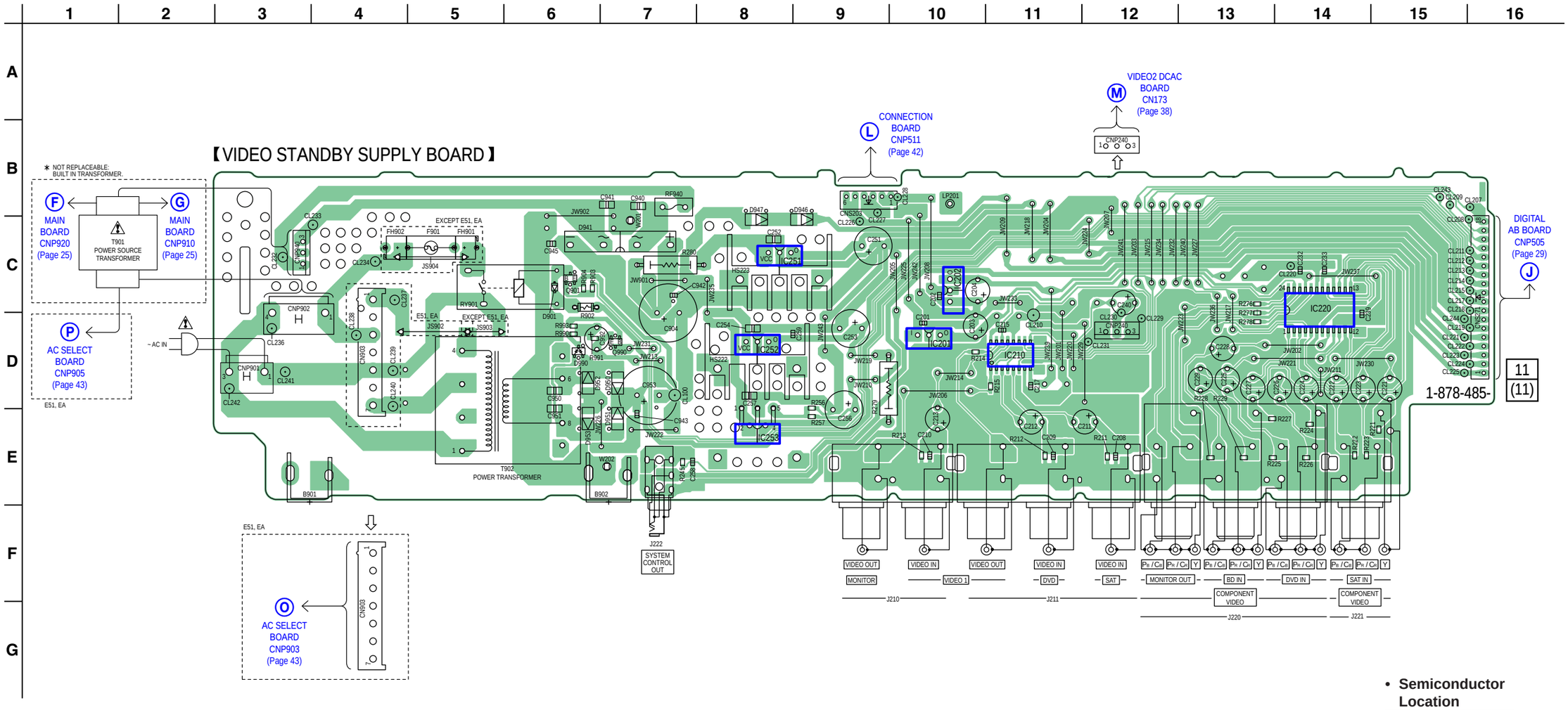

• **Semiconductor Location**

Ref. No.	Location
D901	C-6
D941	C-6
D946	B-9
D947	B-8
D950	D-7
D951	E-7
D952	D-6
D953	E-6
D990	D-6
IC201	D-10
IC202	C-10
IC210	D-11
IC220	C-14
IC251	C-8
IC252	D-8
IC253	E-8
Q901	C-6
Q990	D-7

6-17. SCHEMATIC DIAGRAM – VIDEO STANDBY SUPPLY Section – • See page 45 for IC Block Diagrams.

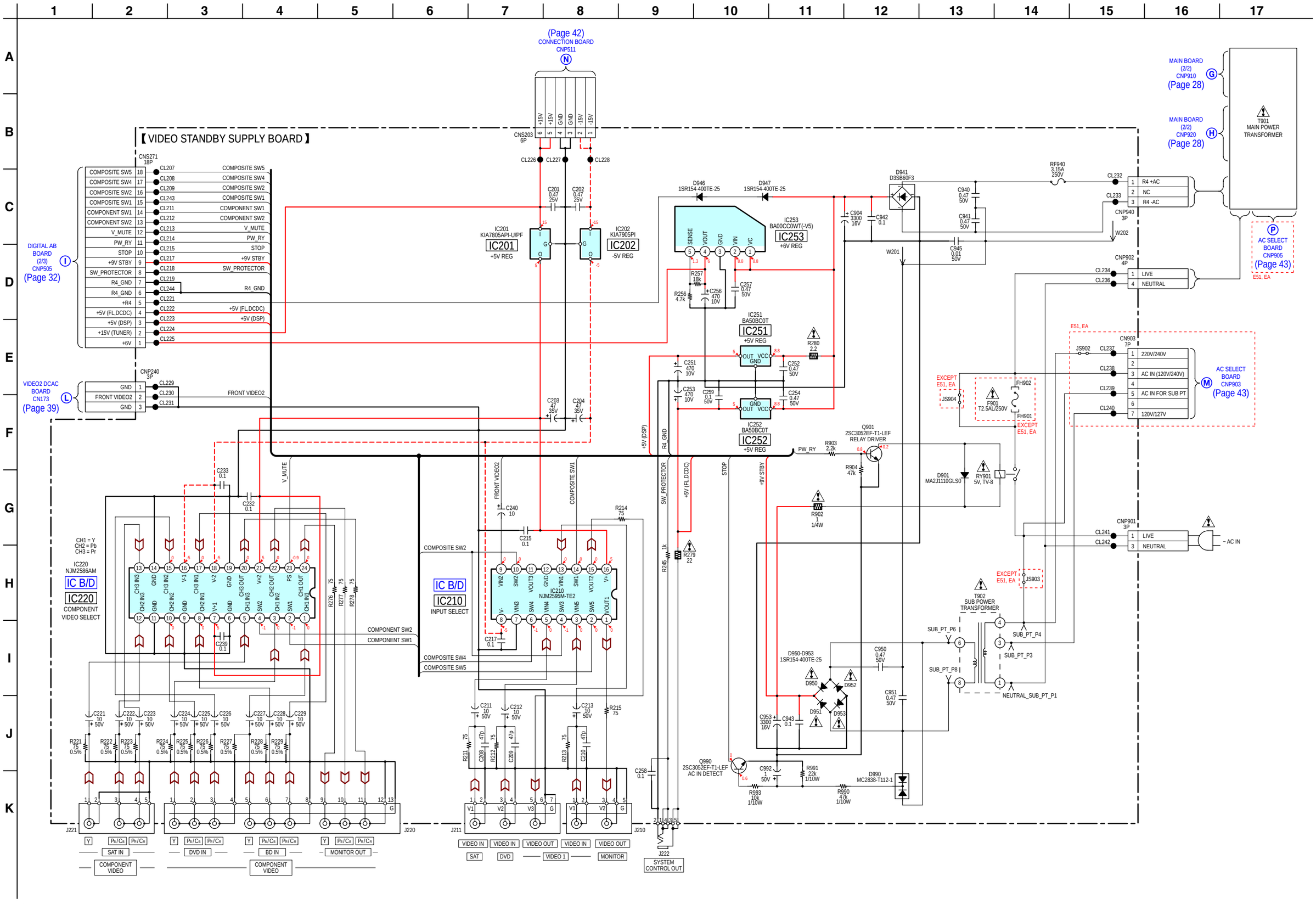

6-18. PRINTED WIRING BOARD – HDMI SW Section –

• See page 17 for Circuit Boards Location.

• : Uses unleaded solder.

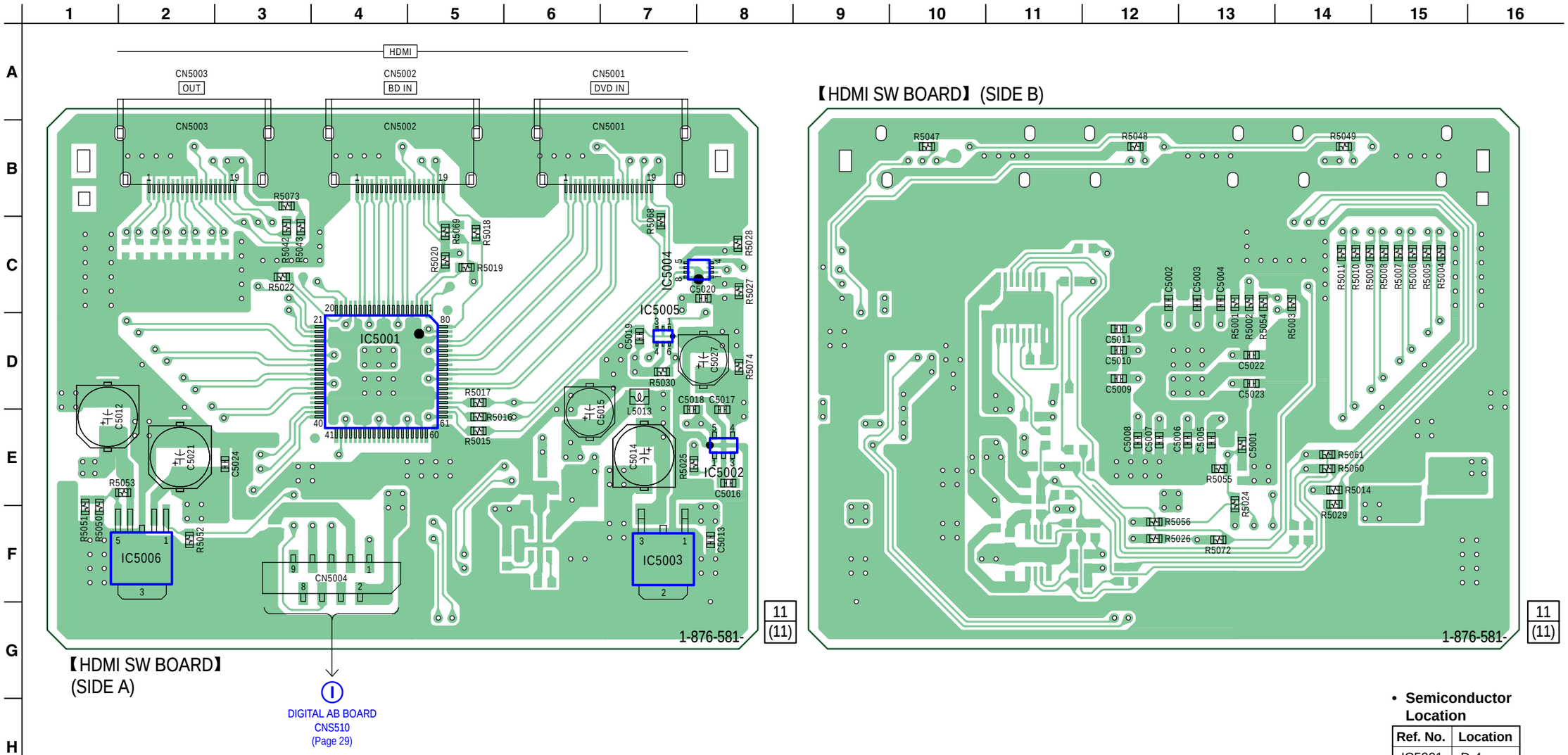

• **Semiconductor Location**

Ref. No.	Location
IC5001	D-4
IC5002	E-8
IC5003	F-7
IC5004	C-8
IC5005	D-7
IC5006	F-2

6-19. SCHEMATIC DIAGRAM – HDMI SW Section – • See page 44, 46, 47 for IC Block Diagrams.

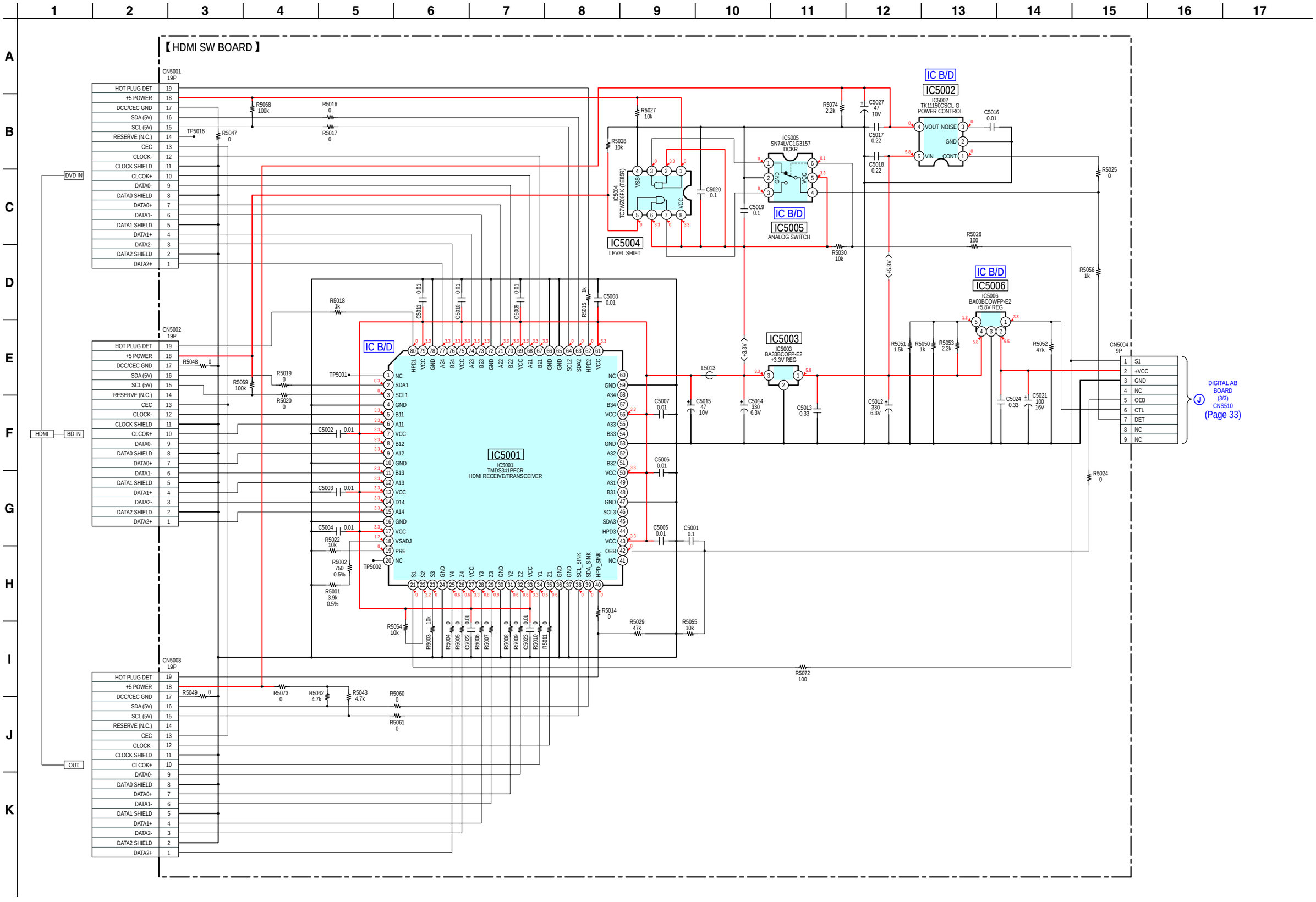

6-20. PRINTED WIRING BOARDS – VIDEO2 DCAC, HEADPHONE Section –

• See page 17 for Circuit Boards Location.

• : Uses unleaded solder.

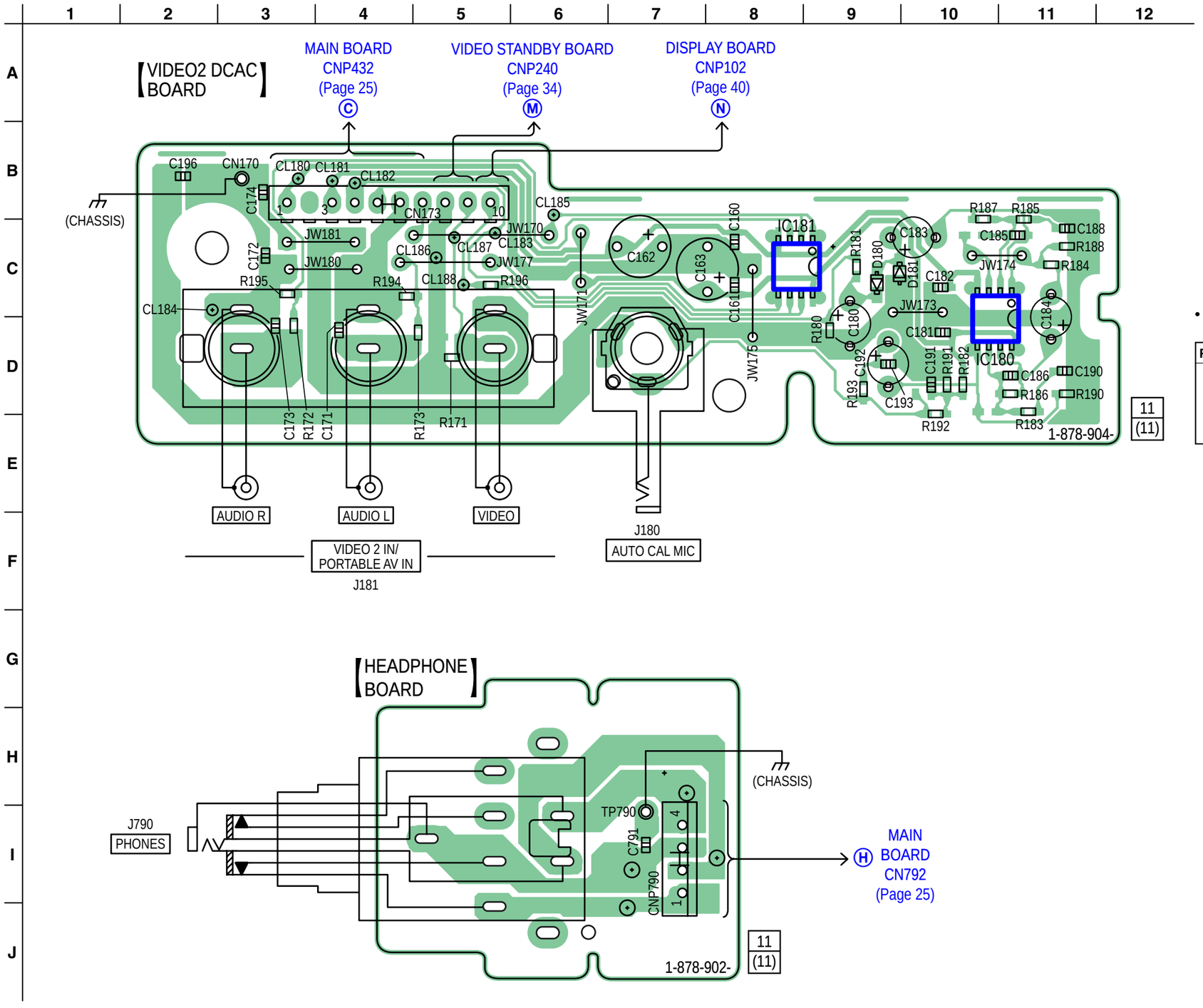

• **Semiconductor Location**

Ref. No.	Location
D180	C-9
D181	C-9
IC180	D-10
IC181	C-8

6-21. SCHEMATIC DIAGRAM – VIDEO2 DCAC, HEADPHONE Section –

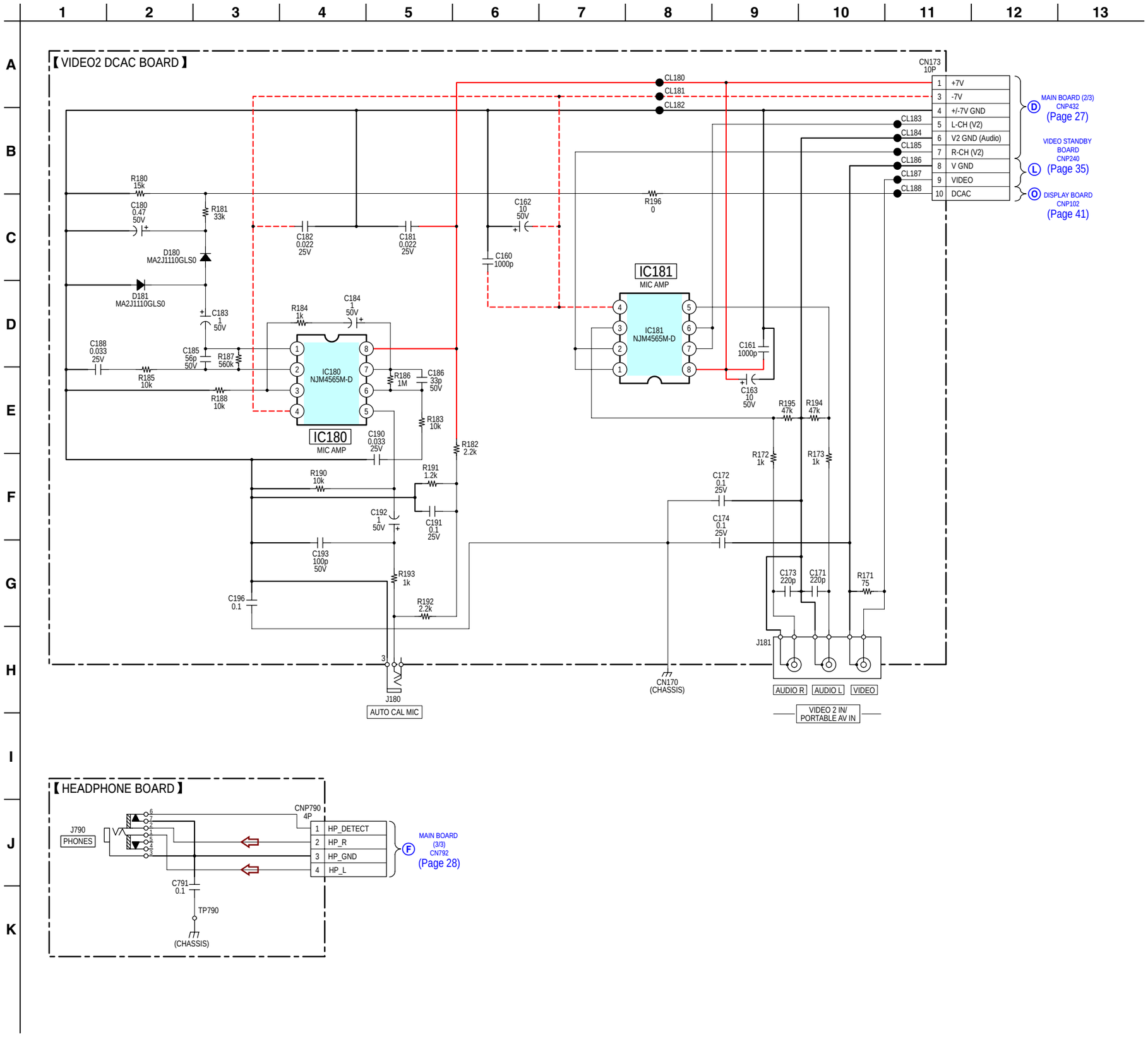

6-22. PRINTED WIRING BOARD – DISPLAY, POWER Section –

• See page 17 for Circuit Boards Location.

• : Uses unleaded solder.

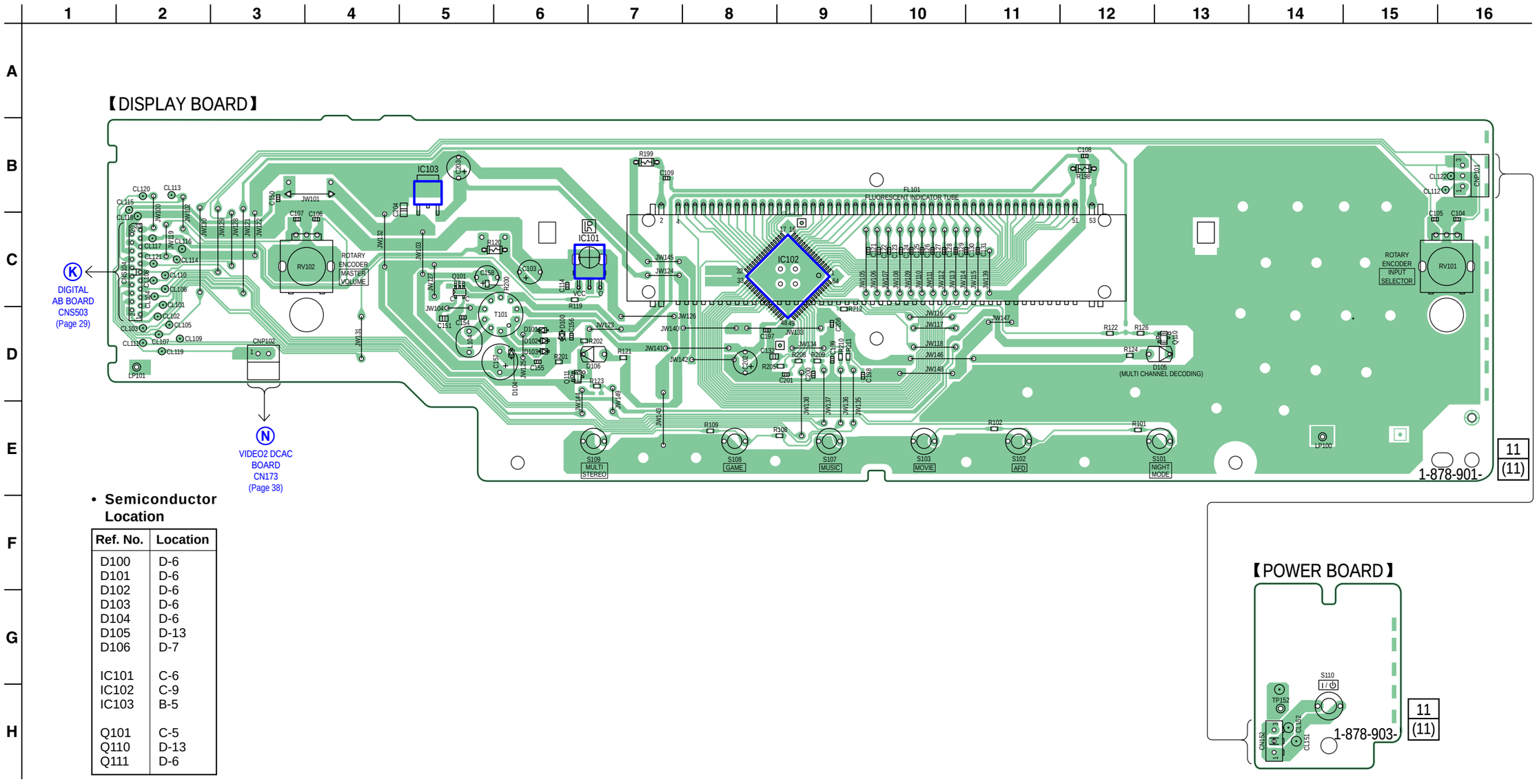

• **Semiconductor Location**

Ref. No.	Location
D100	D-6
D101	D-6
D102	D-6
D103	D-6
D104	D-6
D105	D-13
D106	D-7
IC101	C-6
IC102	C-9
IC103	B-5
Q101	C-5
Q110	D-13
Q111	D-6

6-23. SCHEMATIC DIAGRAM – DISPLAY, POWER Section –

• See page 23 for Waveforms. • See page 47 for IC Block Diagrams.

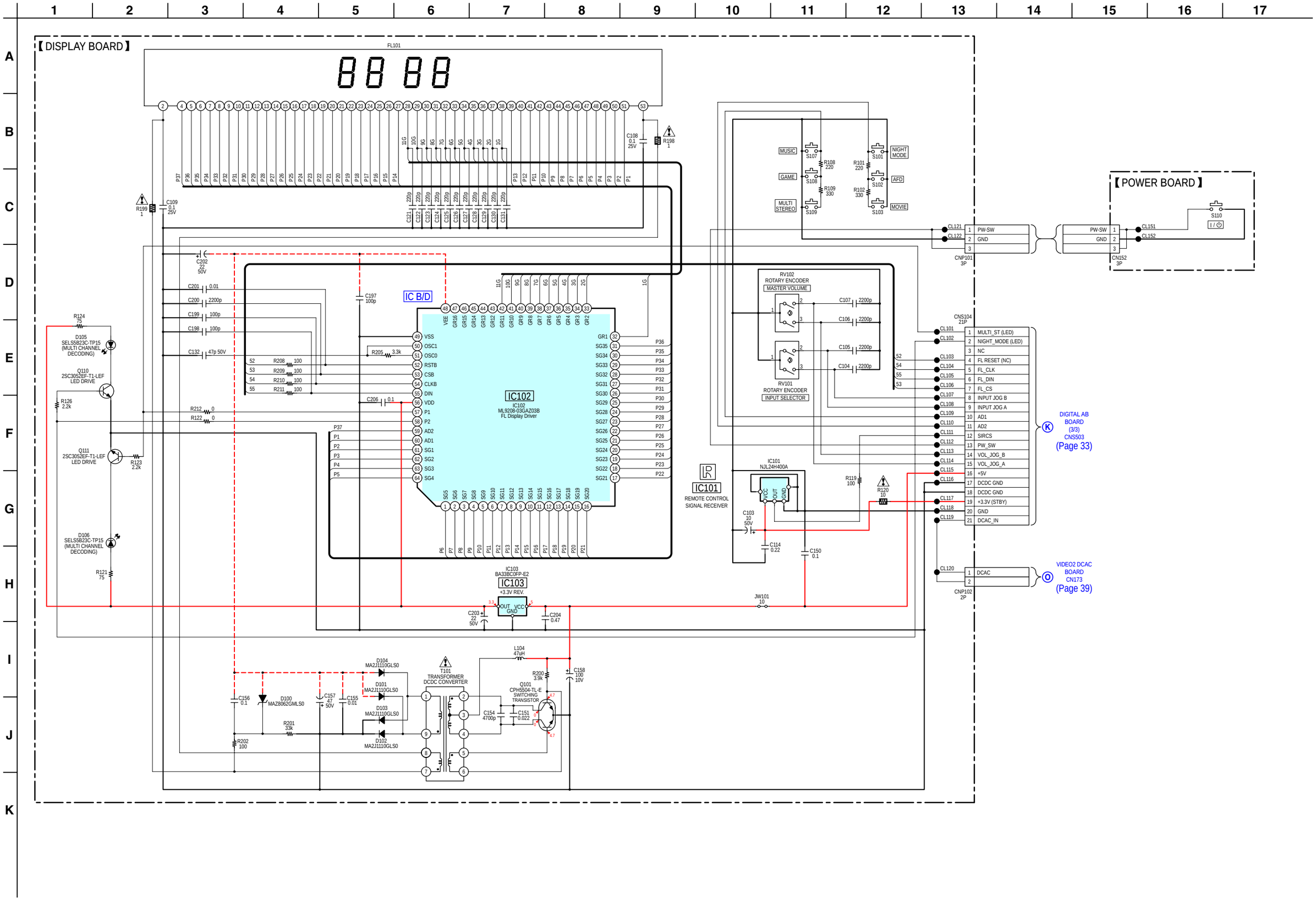

6-24. PRINTED WIRING BOARDS – TEMP-SENSOR, CONNECTION Section –

• See page 17 for Circuit Boards Location. • : Uses unleaded solder.

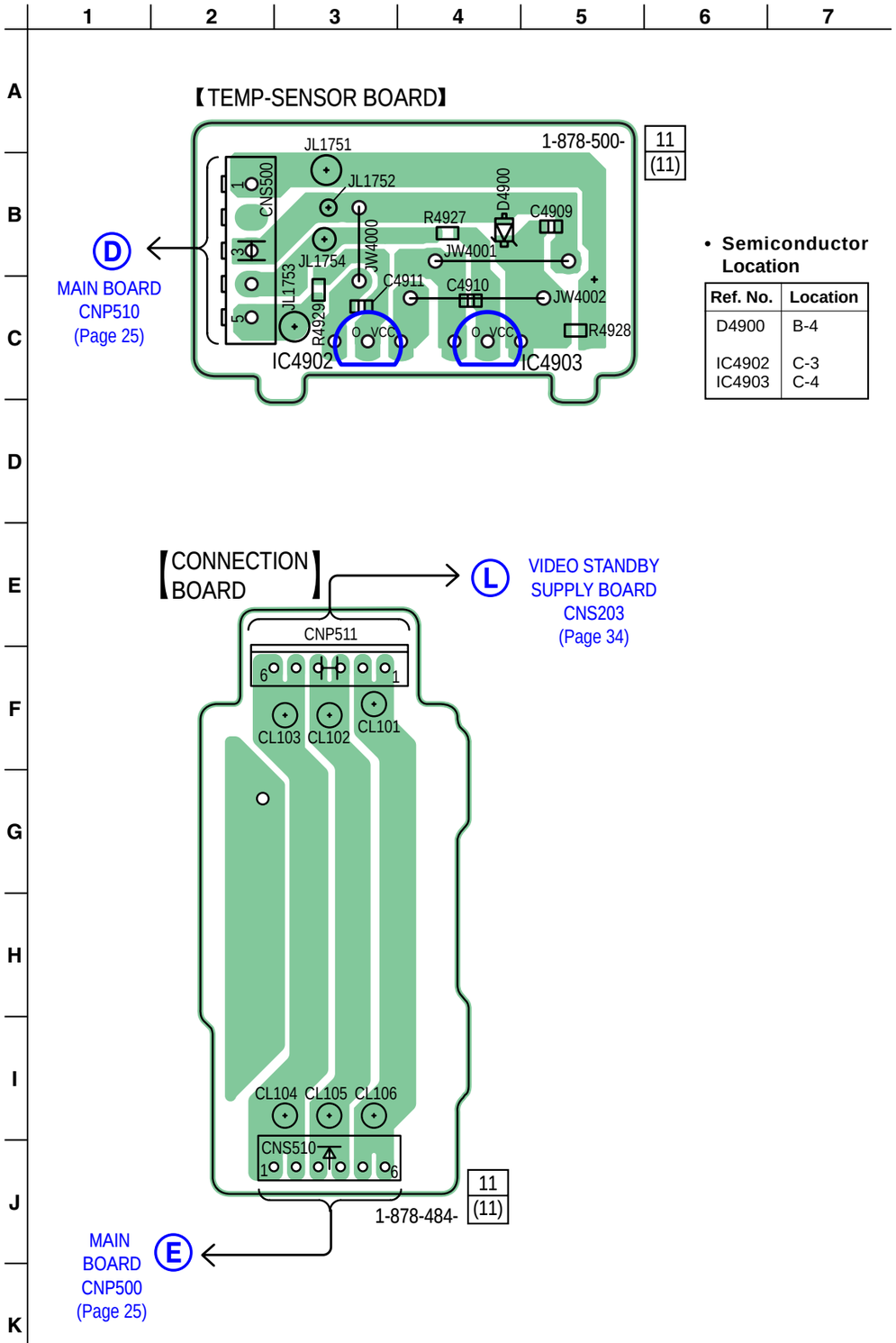

• **Semiconductor Location**

Ref. No.	Location
D4900	B-4
IC4902	C-3
IC4903	C-4

6-25. SCHEMATIC DIAGRAM – TEMP-SENSOR, CONNECTION Section –

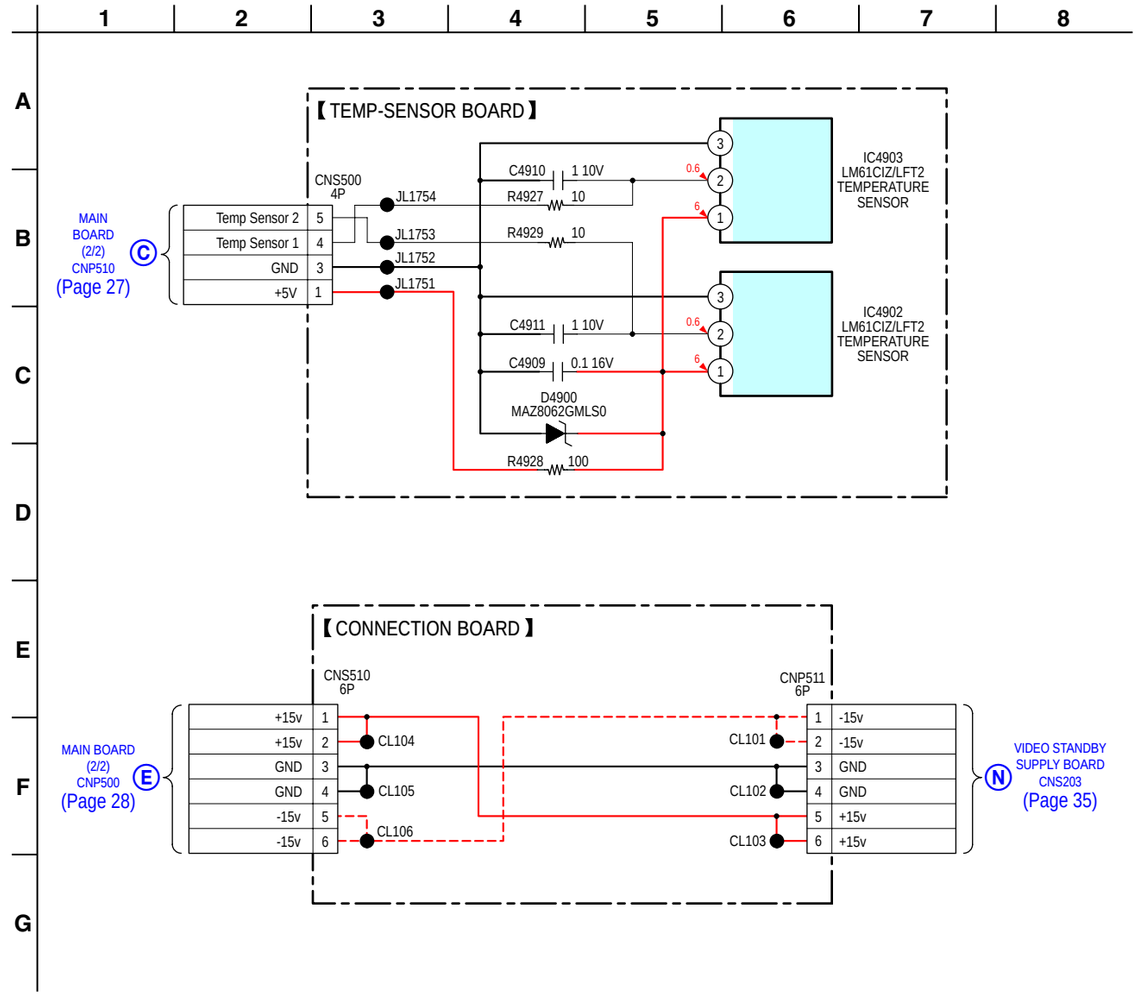

6-26. PRINTED WIRING BOARD – AC SELECT Section (Saudi Arabia model, Chilean and Peruvian models) -

• See page 17 for Circuit Boards Location. • : Uses unleaded solder.

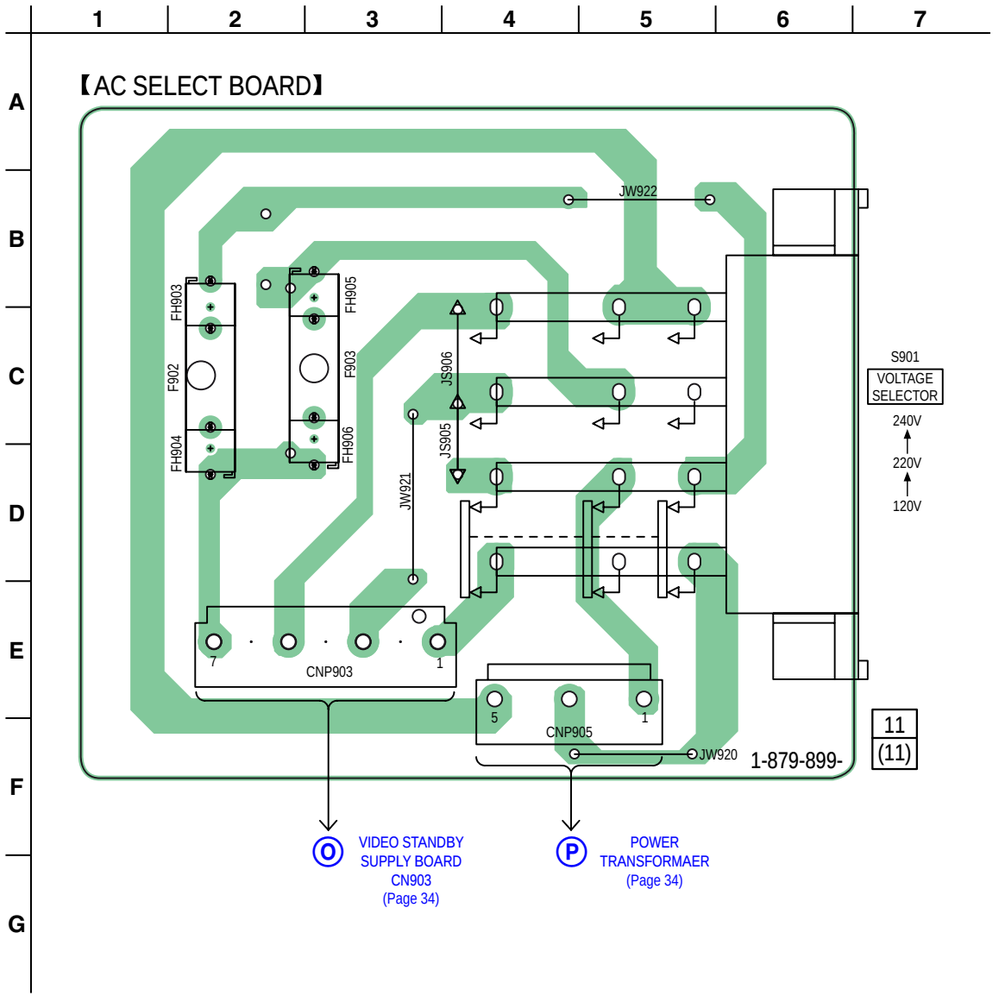

6-27. SCHEMATIC DIAGRAM – AC SELECT Section (Saudi Arabia model, Chilean and Peruvian models) –

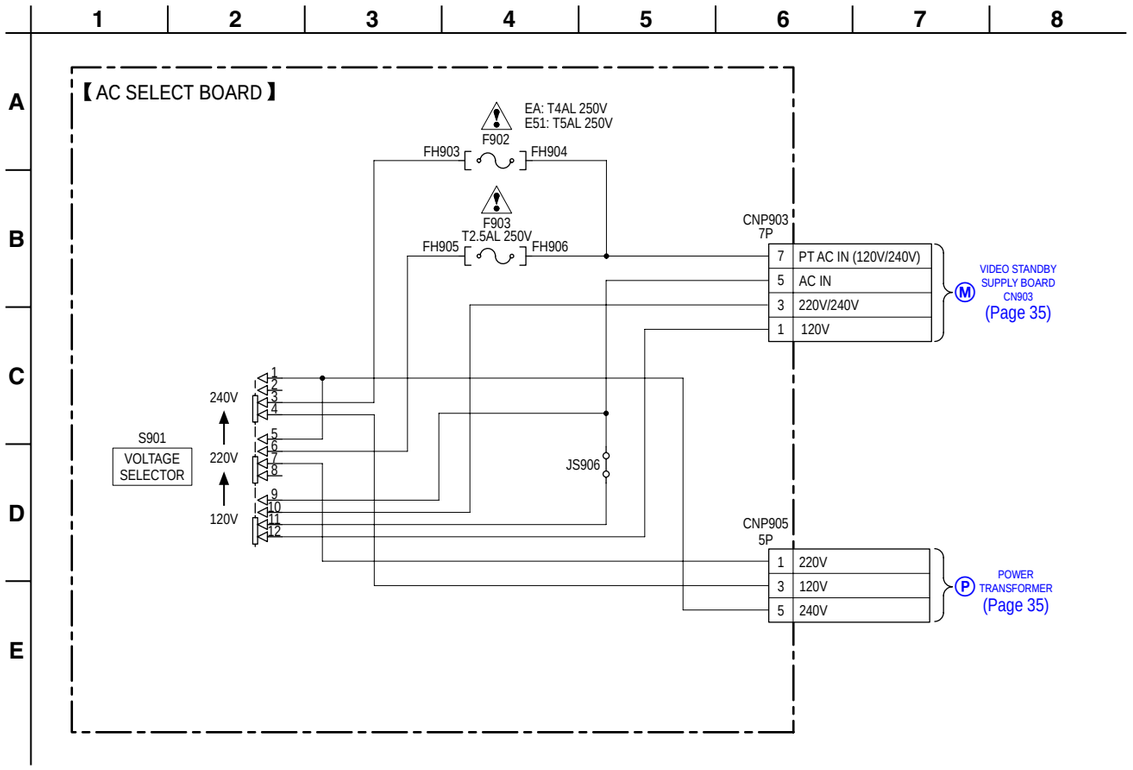

- **IC Block Diagrams**

IC601, IC701, IC801 STK350-530T-E (MAIN BOARD (1/3))

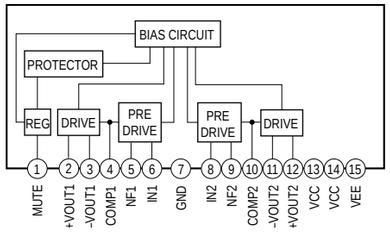

IC501 IC NJM4565M-D (MAIN BOARD (2/3))

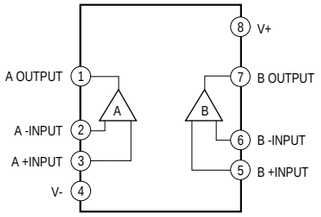

IC400 BD3471KS2 (MAIN BOARD (2/3))

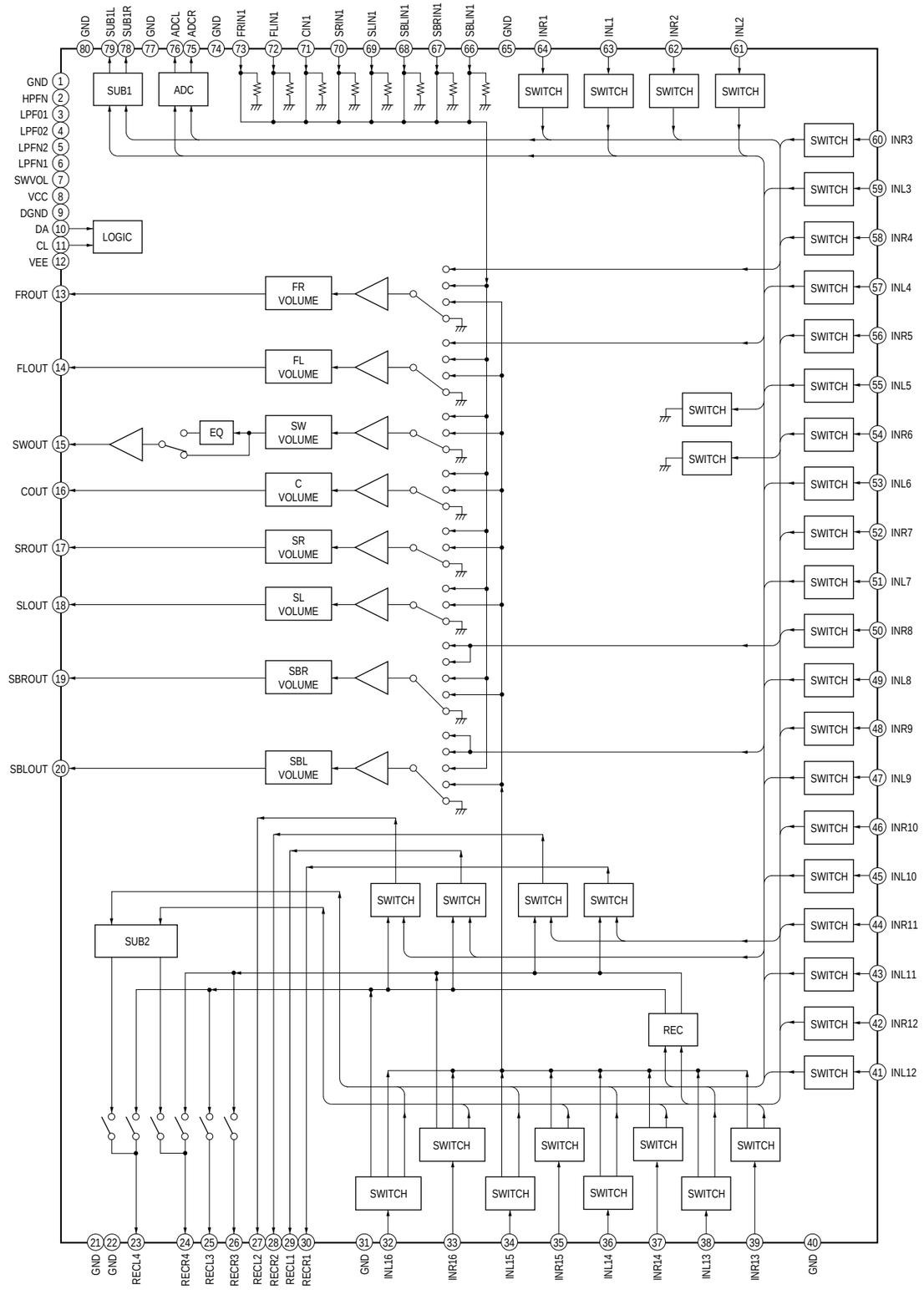

IC1906 SI-3050KM-TLS (DIGITAL AB BOARD (1/3))

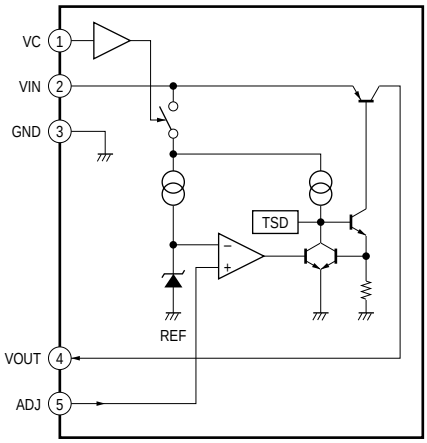

IC1401 PCM1808PWR (DIGITAL AB BOARD (1/3))

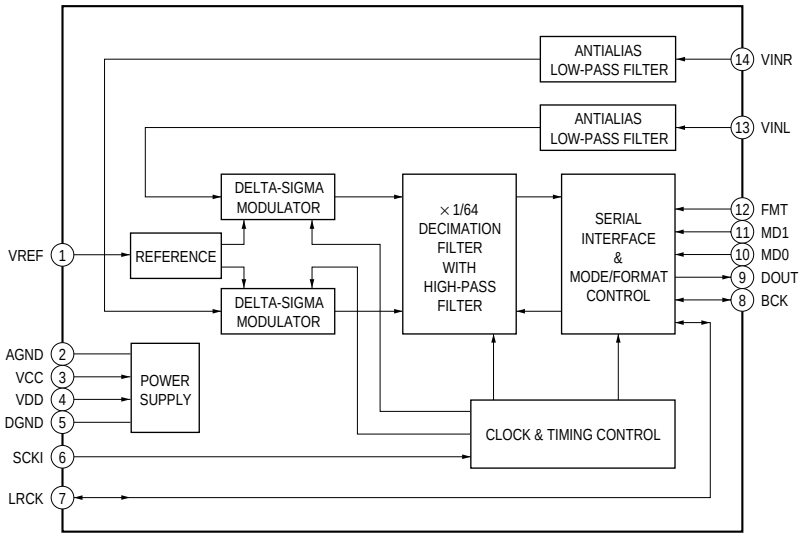

IC1452 WM8768GEDS/R (DIGITAL AB BOARD (1/3))

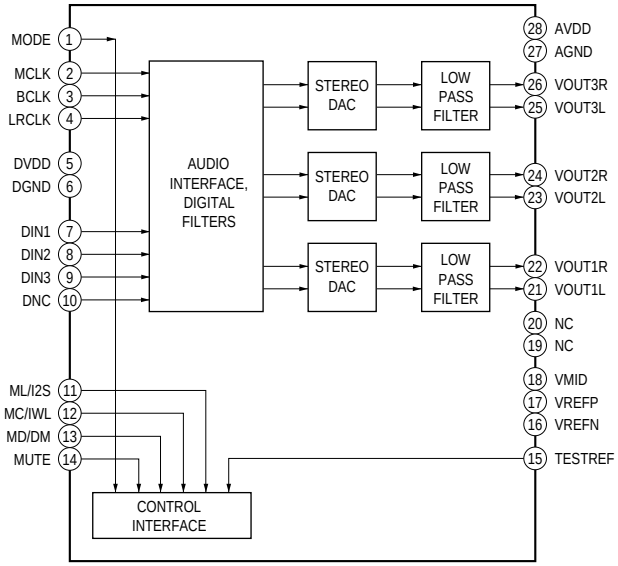

IC2210 TK11150CSCL-G (DIGITAL AB BOARD (1/3))
IC5002 TK11150CSSL-G (HDMI SW BOARD)

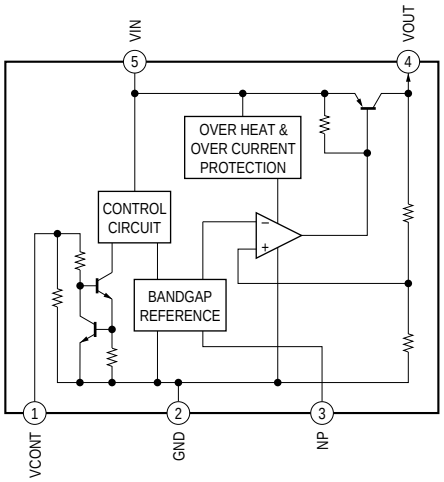

IC1201 LC89058W-E (DIGITAL AB BOARD (1/3))

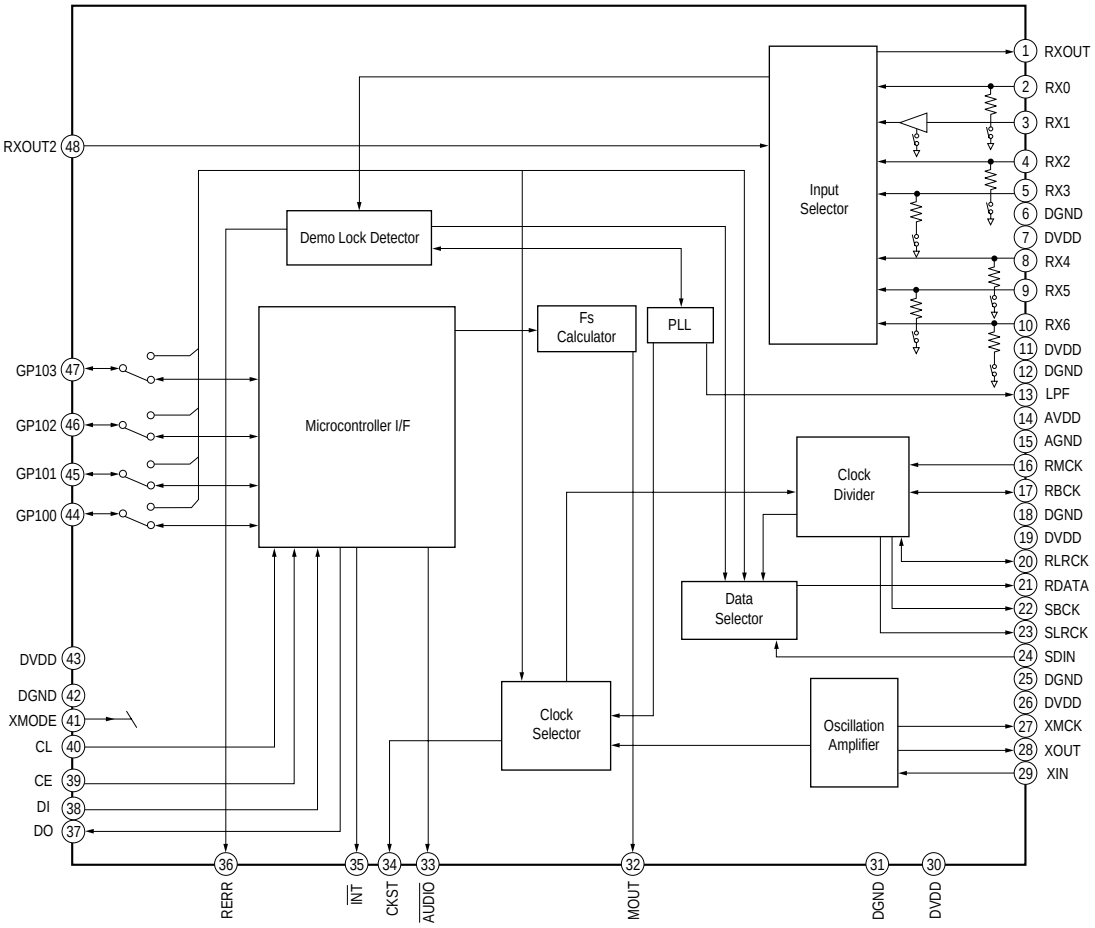

IC1014 TC7WH74FU (TE12R) (DIGITAL AB BOARD) (2/3))

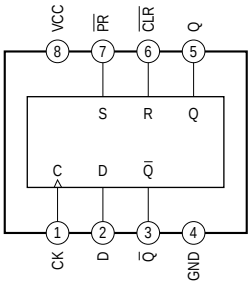

IC1131 BR24S16FJ - WE2 (DIGITAL AB BOARD (3/3))

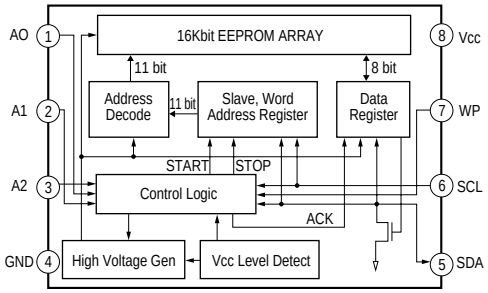

IC220 NJM2586AM (VIDEO STANDBY SUPPLY BOARD)

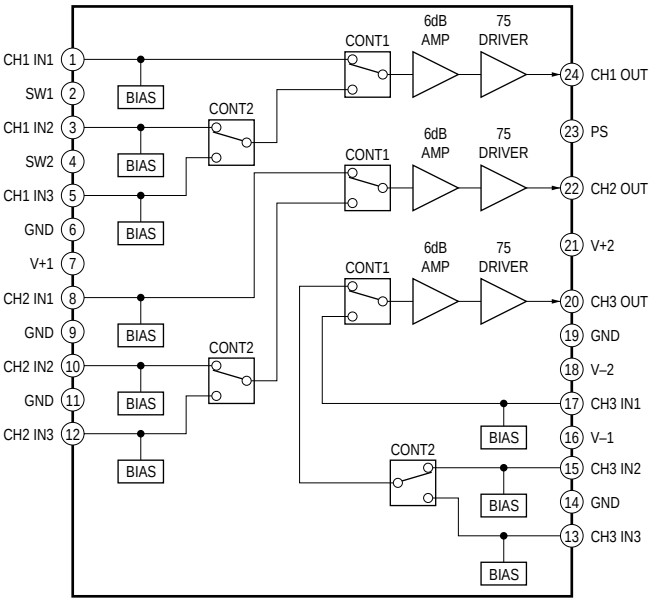

IC210 NJM2595M-TE2 (VIDEO STANDBY SUPPLY BOARD)

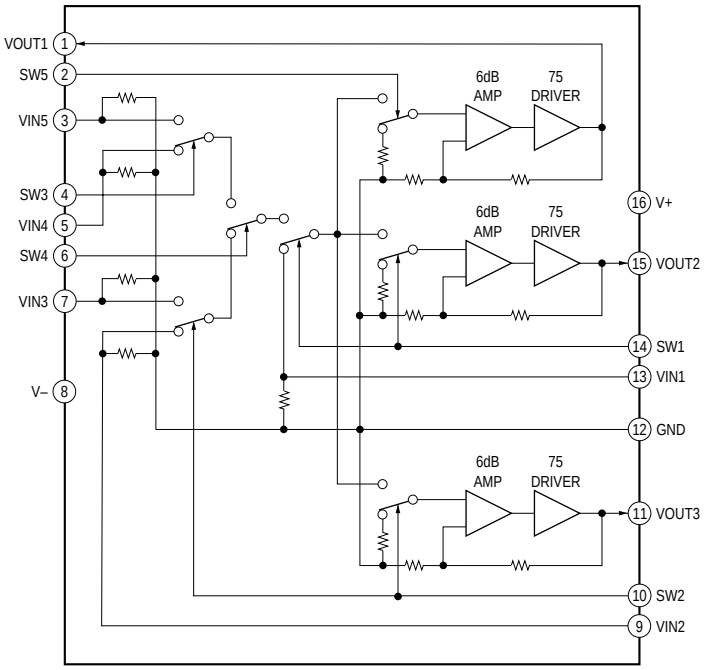

IC5001 TMDS341PFCR (HDMI SW BOARD)

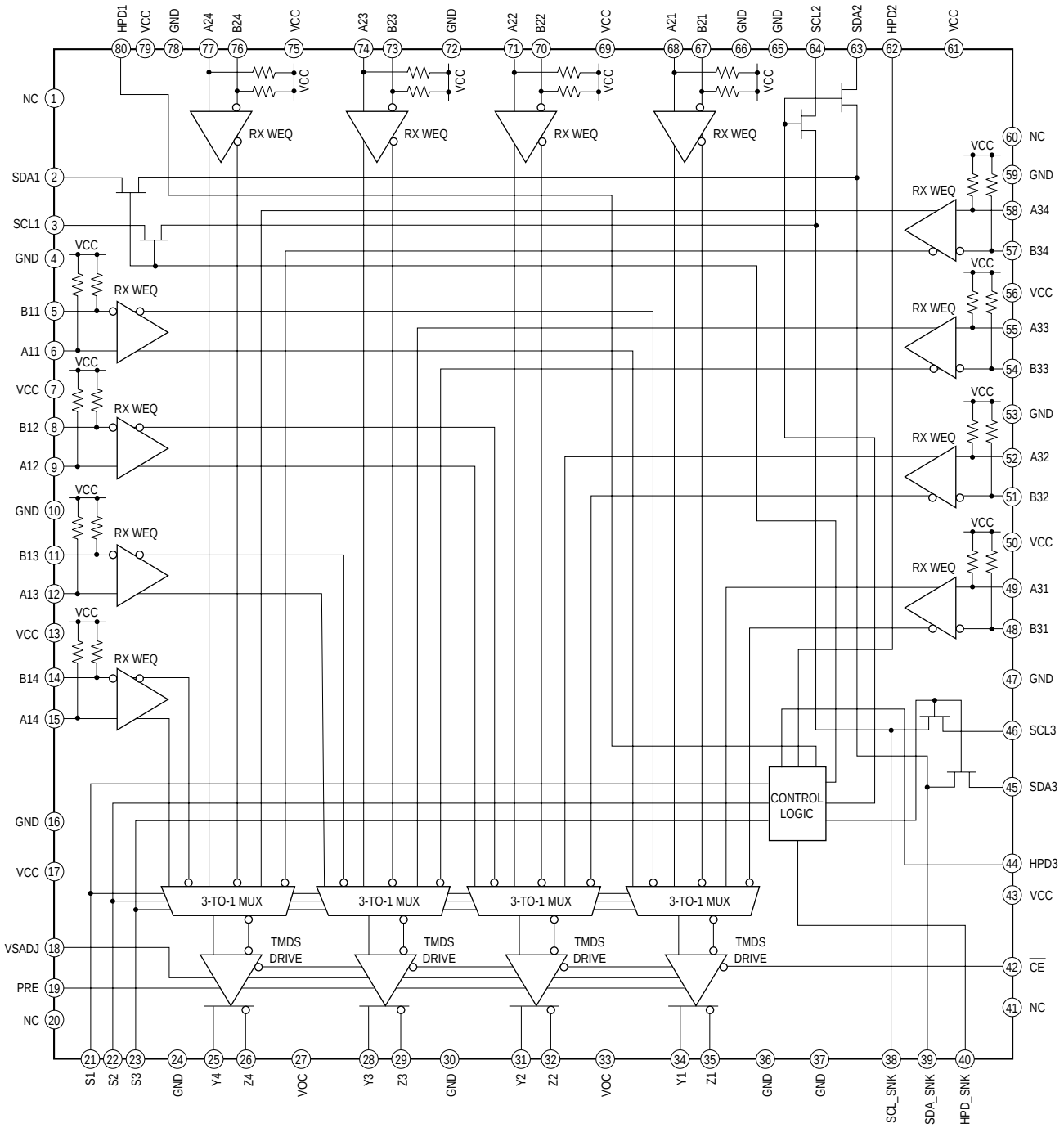

IC5005 SN74LVC1G3157DCKR (HDMI SW BOARD)

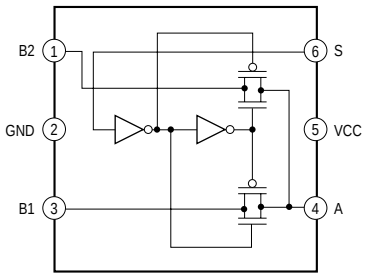

IC5006 BA00BC0WFP-E2 (HDMI SW BOARD)

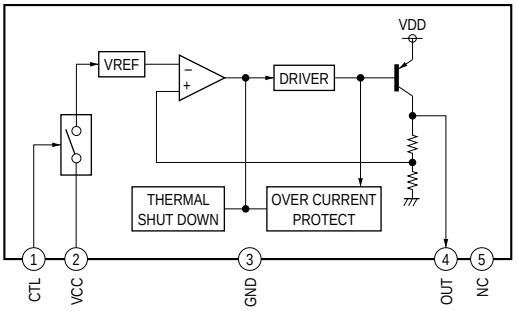

IC102 ML9208-03GAZ03B (DISPLAY BOARD)

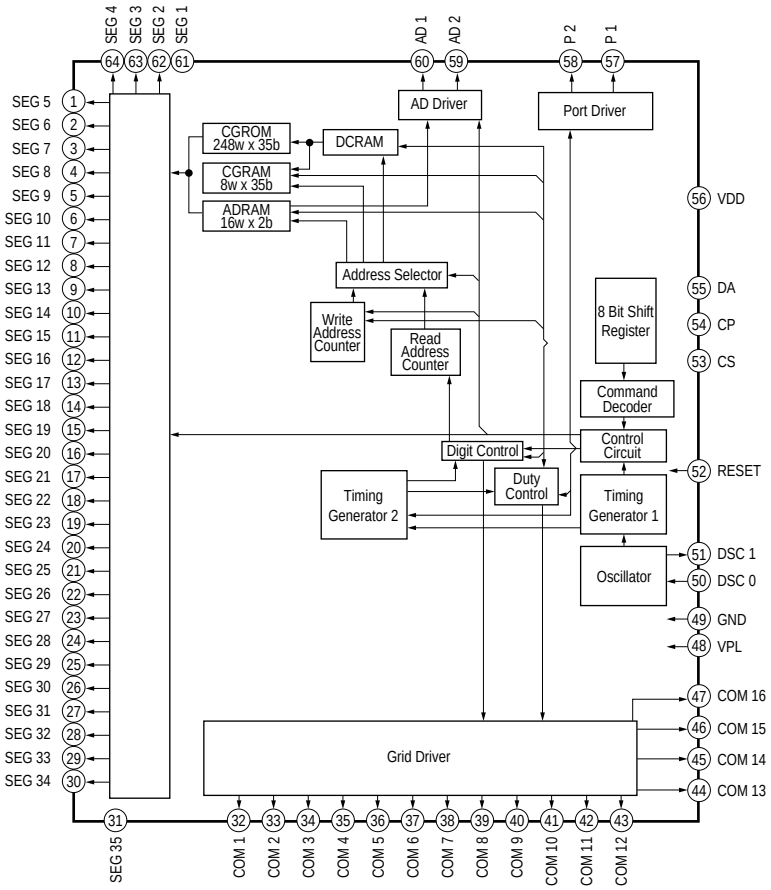

• **IC Pin Function Descriptions**

DIGITAL AB BOARD (3/3) IC1101 MB90F046PF-G-123E1 (SYSTEM CONTROLLER)

Pin No.	Pin Name	I/O	Description
1	DIR_DATA0	I	Serial data input from DIR IC
2	V_MUTE	O	Video mute signal output for COMPONENT VIDEO SELECT IC
3, 4	COMP_S2, COMP_S1	O	Component video select signal output for COMPONENT VIDEO SELECT IC
5, 6	V_SW1, V_SW2	O	Video select signal output for COMPOSITE VIDEO SELECT IC
7	V_SW4	O	Video select signal output for COMPOSITE VIDEO SELECT IC
8	XRST	O	System reset signal output for DSP EX3 IC
9	V_SW5	O	Video select signal output for COMPOSITE VIDEO SELECT IC
10	NC	—	Not used (Open)
11	VSS	—	Ground terminal
12	DAC ML	O	Serial latch signal output for 6CH DAC IC
13	DAC MC	O	Clock signal output for 6CH DAC IC
14	DAC MDI	O	Serial data output for 6CH DAC IC
15	DAC MUTE	O	Mute signal output for 6CH DAC IC
16	NC	—	Not used (Open)
17	NC	—	Not used (Open)
18	MISO (Serial In)	I	Serial data input from DSP EX3 IC
19	MOSI (Serial Out)	O	Serial data output for DSP EX3 IC
20	DSP SPI CLK	O	Serial data transfer clock signal output for DSP EX3 IC
21	DSP SPIDS (LAT)	I	Serial data latch pulse signal input for DSP EX3 IC
22	MODEL	I	Model select signal input (Fixed at L)
23	Vcc5	—	Power Supply Pin (+3.3V)
24	VOL_IC_DATA	O	Serial data output for VOLUME IC BD3471KS2
25	VOL_IC_CLK	O	Clock signal output for VOLUME IC BD3471KS2
26	DMPORT_DET	I	DMPORT detection signal input
27	FLASH2/DMPORT_MI-COM RX	I	Flash programming signal input/ DMPORT receiver signal output
28	FLASH1/DMPORT_MI-COM TX	O	Flash programming signal output/ DMPORT receiver signal input
29	SDA	I	Serial data input from EEPROM IC
30	SCL	O	Clock signal output for EEPROM IC
31	ENC_A	I	Input selector Encoder (A) signal input
32	ENC_B	I	Input selector Encoder (B) signal input
33	NC	—	Not used
34	P_HDMI_S1	O	Switching signal output for HDMI IC
35	AVCC	—	Power supply pin (+3.3V)
36	AVRH	—	Power supply pin (+3.3V)
37	AVSS	—	Ground
38	DCAC IN	I	AUTO CAL MIC analog signal input
39	A/D 1	I	Key signal input (A/D port)
40	A/D 2	I	Key signal input (A/D port)
41	VERSION	I	DESTINATION detection signal input (H)
42	VSS	—	Ground terminal
43	LIMITER	I	Limiter level detection circuit signal input
44	TEMP SENSOR 2	I	Temperature Sensor 2 signal input
45	VACS CTRL	—	NC
46	TEMP SENSOR 1	I	Temperature Sensor 1 signal input
47	DSP INT	I	Interrupt status input from DSP EX3 IC
48	STOP	I	AC off detection signal input
49	MD0	—	Selection of micon operation mode
50	MD1	—	Not used (Connect to AVCC)
51	MD2	—	Selection of micon operation mode
52	RDS_CLK	—	RDS data clock signal input (not used)
53	RDS_DATA	—	RDS data input (not used)
54	SIRCS	I	SIRCS signal input
55	HP DETECT	I	Headphone detection signal input

Pin No.	Pin Name	I/O	Description
56	POWER KEY	I	Power key detection signal input
57	DCAC INT	I	DCAC data input from DSP EX3 IC
58	POWER RY	O	Power relay driver control signal output
59	MULTI_ST	—	Not used
60	NIGHT_MODE	—	Not used
61	PROTECTOR	I	Protector detection signal input
62	HP_RY	O	Headphone relay driver control signal output
63	FUSE_DETECT	I	Fuse open detection signal input
64	VOL ENCODER (B)	I	MASTER VOLUME encoder (B) signal input
65	VOL ENCODER (A)	I	MASTER VOLUME encoder (A) signal input
66	C/ SW/ REAR/ SB RY	O	Center / surround speaker relay driver control signal output
67	NC	—	Not used
68	Bridgeable RY	O	Bridgeable relay control signal output
69	PRE-OUT SW RY	O	Sub woofer relay driver control signal output
70	FRONT A (Active SW)	O	Front speaker relay driver control signal output
71	SW PROTECTOR	I	Subwoofer protector input pin
72	NC	—	Not used
73	FL_RESET	—	Reset signal o/p for FL Display Driver IC
74	FL_CLK	O	Clock signal output for FL DISPLAY DRIVER IC
75	FL_DATA	O	Serial data output for FL DISPLAY DRIVER IC
76	FL_LAT	O	Latch signal output for FL DISPLAY DRIVER IC
77	RSTX	I	Reset signal input
78	Tuner SD	I	Tuner detection signal input
79	X1A	—	Not used (Open)
80	X0A	—	Not used (connect to VSS)
81	Vss	—	Ground
82	X0	I	Clock signal input (24 MHz)
83	X1	I	Clock signal input (24 MHz)
84	Vcc3	—	Power Supply pin (+3.3v)
85	+5.8_CTRL (HDMI)	—	HDMI IC +5.8_control
86	P5_SEL A	O	Switching signal output for IC3504 SN74LV052APWR
87	P5_SEL B	O	Switching signal output for IC3504 SN74LV052APWR
88	HDMI_DET	I	HDMI detection signal input
89	DO/ SD/ ST	I	Tuner serial data input
90	TUNER_CLK	O	Serial clock signal output for tuner pack
91	TUNER_DATA	O	Serial data output for tuner pack
92	SLATCH	O	Tuner latch signal output
93	DIR_XMODE	O	Xmode signal output for DIR IC
94	DIR_CKSEL 1	O	Clock select signal output for DIR IC
95	DIR_CLK	O	Data clock signal output for DIR IC
96	DIR_CE	O	Latch signal output for DIR IC
97	DIR_DI	O	Data output for DIR IC
98	DIR_DO	I	Data input from DIR IC
99	DIR_ERROR	I	Error detection signal input from DIR IC
100	NC	O	Switching signal output for HDMI IC

• **IC Pin Function Descriptions**
DIGITAL AB BOARD (2/3) IC1501 ADSP21266SKSTZ-2C (DSP EX3)

Pin No.	Pin Name	I/O	Description
1	VDDINT	—	Power supply terminal (+1.2V)
2	CLKCFG0	I	Clock frequency setting signal input 0 (Fixed at L)
3	CLKCFG1	I	Clock frequency setting signal input 1 (Fixed at H)
4	BOOTCFG0	I	Boot mode setting signal input 0 for DASP IC (Fixed at H)
5	BOOTCFG1	I	Boot mode setting signal input 1 for DASP IC (Fixed at H)
6	GND	—	Ground
7	VDDEXT	—	Power supply pin (+3.3V)
8	GND	—	Ground
9	VDDINT	—	Power supply pin (+1.2V)
10	GND	—	Ground
11	VDDINT	—	Power supply pin (+1.2V)
12	GND	—	Ground
13	VDDINT	—	Power supply pin (+1.2V)
14	GND	—	Ground
15	FLAG0	O	Interruption request signal output for SYSTEM CONTROL IC
16	FLAG1	O	PLL lock error signal output and data error flag signal output for SYTEM CONTROL IC
17	AD7	—	Not used (Open)
18	GND	—	Ground
19	VDDINT	—	Power supply pin (+1.2V)
20	GND	—	Ground
21	VDDEXT	—	Power supply pin (+3.3V)
22	GND	—	Ground
23	VDDINT	—	Power supply pin (+1.2V)
24	AD6	—	Not used (Open)
25	AD5	—	Not used (Open)
26	AD4	—	Not used (Open)
27	VDDINT	—	Power supply pin (+1.2V)
28	GND	—	Ground
29, 30	AD3, AD2	—	Not used (Open)
31	VDDEXT	—	Power supply pin (+3.3V)
32	GND	—	Ground
33, 34	AD1, AD0	—	Not used (Open)
35	WR	—	Not used (Open)
36, 37	VDDINT	—	Power supply pin (+1.2V)
38	GND	—	Ground
39	RD	—	Not used (Open)
40	ALE	—	Not used (Open)
41 to 43	AD15 to AD13	—	Not used (Open)
44	GND	—	Ground
45	VDDEXT	—	Power supply pin (+3.3V)
46	AD12	—	Not used (Open)
47	VDDINT	—	Power supply pin (+1.2V)
48	GND	—	Ground
49 to 52	AD11 to AD8	—	Not used (Open)
53	A16 DAI_PI	—	Not used (Open)
54	VDDINT	—	Power supply pin (+1.2V)
55	GND	—	Ground
56, 57	A17 DAI_P2, A18 DAI_P3	—	Not used (open)
58	GND	—	Ground
59	VDDEXT	—	Power supply pin (+3.3V)
60	VDDINT	—	Power supply pin (+1.2V)
61	GND	—	Ground

Pin No.	Pin Name	I/O	Description
62	PF_CE DAI_P4	—	Not used (open)
63	SPI_MAS DAI_P5	—	Not used (open)
64	DPSOA DAI_P6(L&R)	O	PCM audio signal output
65	DPSOB DAI_P7 (SL&SR)	O	PCM audio signal output
66	VDDINT	—	Power supply pin (+1.2V)
67	GND	—	Ground
68	VDDINT	—	Power supply terminal (+1.2V)
69	GND	—	Ground
70	DSPOC DAI_P8 (C&SW)	O	PCM audio signal output
71	DSPOD DAI_P9 (SBL&SBR)	—	Not used (open)
72	VDDINT	—	Power supply pin (+1.2V)
73	VDDEXT	—	Power supply pin (+3.3V)
74	GND	—	Ground
75	VDDINT	—	Power supply pin (+1.2V)
76	GND	—	Ground
77	DAI_P10 DPSOE	—	Not used (open)
78	DAI_P11 DPSIA	I	PCM audio signal (digital input) input
79	DAI_P12 DPSIB	I	PCM audio signal input from the A/D converter
80	DAI_P13 DPSIC	I	PCM audio signal input
81	DAI_P14 DPSID	I	PCM audio signal input
82	DAI_P15 DPSIE	I	PCM audio signal input
83	VDDINT	—	Power supply pin (+1.2V)
84, 85	GND	—	Ground
86	DAI_P16 DPDVLRCK (LRCK OUT)	O	L/R sampling clock (44.1kHz) signal output for PCM audio signal output
87	DAI_P17 DPDVBCK (BCK OUT)	O	Bit clock (2.8224 MHz) signal output for PCM audio signal ouput
88	DAI_P18 DPLRCK(LRCK IN)	I	L/R sampling clock (44.1kHz) signal input for PCM audio signal input
89	DAI_P19 DPBCK (BCK IN)	I	Bit clock (2.8224 MHz) signal input for PCM audio signal input
90	VDDINT	—	Power supply pin (+1.2V)
91, 92	GND	—	Ground
93	VDDEXT	—	Power supply pin (+3.3V)
94	DAI_P20 DPFSCK	I	Master clock signal input
95	GND	—	Ground
96	VDDINT	—	Power supply pin (+1.2V)
97	FLAG2 NONAUDIO*	I	Digital input signal select control signal input
98	FLAG3 SF_CE*	—	Not used (open)
99	VDDINT	—	Power supply pin (+1.2V)
100	GND	—	Ground
101	VDDINT	—	Power supply pin (+1.2V)
102	GND	—	Ground
103	VDDINT	—	Power supply pin (+1.2V)
104	GND	—	Ground
105	VDDINT	—	Power supply pin (+1.2V)
106	GND	—	Ground
107	VDDINT	—	Power supply pin (+1.2V)
108	VDDINT	—	Power supply pin (+1.2V)
109	GND	—	Ground
110	VDDINT	—	Power supply pin (+1.2V)
111	GND	—	Ground

Pin No.	Pin Name	I/O	Description
112	VDDINT	—	Power supply pin (+1.2V)
113	GND	—	Ground
114	VDDINT	—	Power supply pin (+1.2V)
115	GND	—	Ground
116	VDDEXT	—	Power supply pin (+3.3V)
117	GND	—	Ground
118	VDDINT	—	Power supply pin (+1.2V)
119	GND	—	Ground
120	VDDINT	—	Power supply pin (+1.2V)
121	RESET	I	System reset signal input from SYSTEM CONTROL IC
122	SPIDS	I	Serial data latch pulse signal input from SYSTEM CONTROL IC
123	GND	—	Ground
124	VDDINT	—	Power supply pin (+1.2V)
125	SPICLK	I	Serial data transfer clock signal input from SYSTEM CONTROL IC
126	MISO	O	Serial data output for SYSTEM CONTROL IC
127	MOSI	I	Serial data input for SYSTEM CONTROL IC
128	GND	—	Ground
129	VDDINT	—	Power supply pin (+1.2V)
130	VDDEXT	—	Power supply pin (+3.3V)
131	AVDD	—	Power supply pin (+1.2V)
132	AVSS	—	Ground
133	GND	—	Ground
134	CLKOUT	—	Not used (open)
135	EMU	—	Not used (open)
136	TDO	—	Not used (open)
137	TDI	—	Not used (Fixed at L)
138	TRST	—	Not used (Fixed at L)
139	TCK	—	Not used (Fixed at L)
140	TMS	—	Not used (Fixed at L)
141	GND	—	Ground
142	CLKIN	I	System clock input (25 MHz)
143	XTAL	O	System clock output (25 MHz)
144	VDDEXT	—	Power supply pin (+3.3V)

SECTION 7
EXPLODED VIEWS

Note:
- -XX and -X mean standardized parts, so they may have some difference from the original one.
- Items marked "*" are not stocked since they are seldom required for routine service.
  Some delay should be anticipated when ordering these items.
- The mechanical parts with no reference number in the exploded views are not supplied.
- Color Indication of Appearance Parts Example:
  KNOB, BALANCE (WHITE) . . . (RED)
  ↑ Parts Color ↑ Cabinet's Color
- Abbreviation
  AR : Argentina model
  E51 : Chilean and Peruvian models
  EA : Saudi Arabia model
  MY : Malaysia model
  SAF : South African model
  SP : Singapore model

The components identified by mark ⚠ or dotted line with mark ⚠ are critical for safety.
Replace only with part number specified.

7-1. CASE

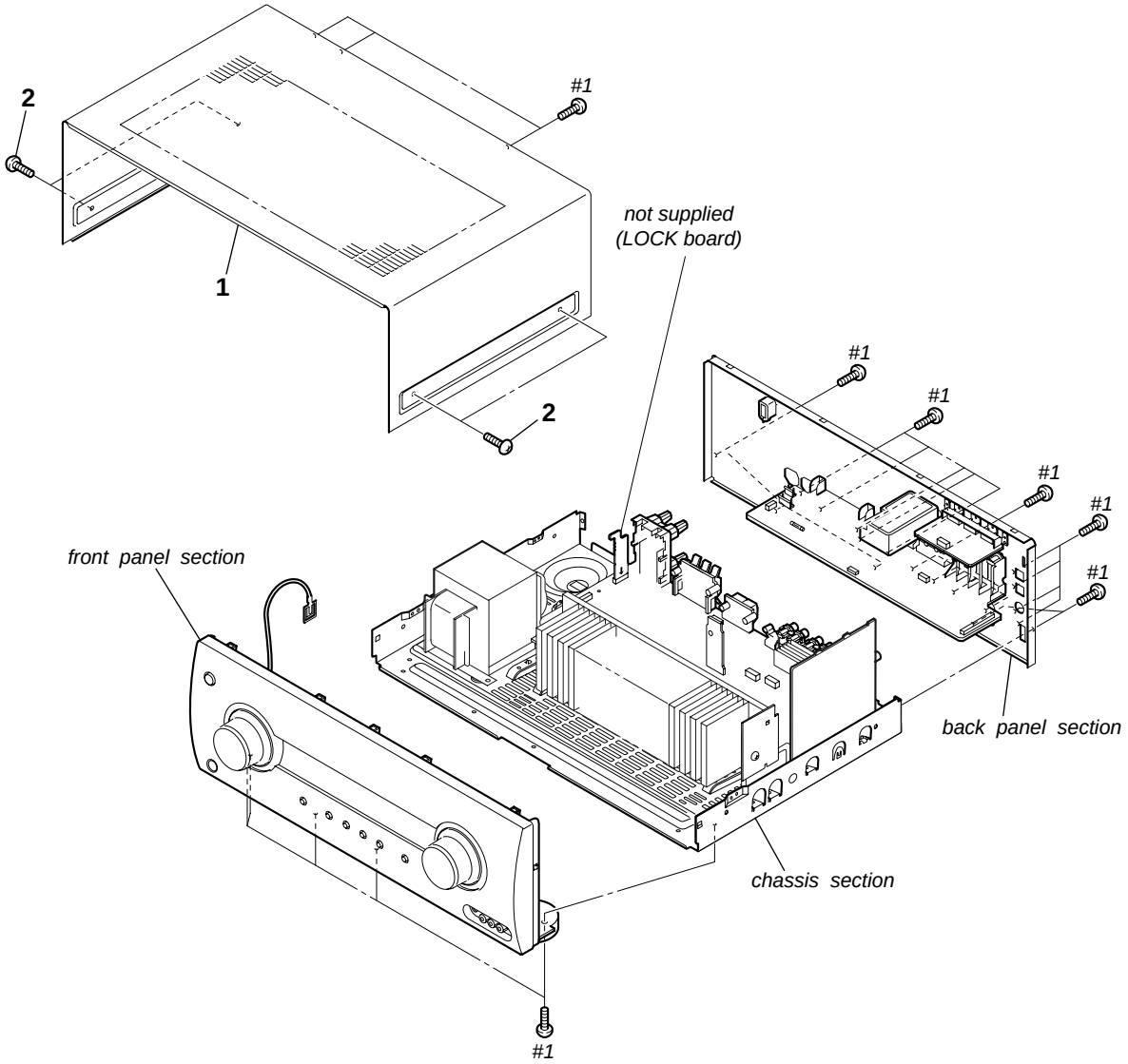

Ref. No.	Part No.	Description	Remark
1	2-661-145-52	CASE	
2	2-580-630-01	SCREW, +BVST 4X8	
#1	7-685-646-79	SCREW +BVTP 3X8 TYPE2 IT-3	

7-2. FRONT PANEL SECTION

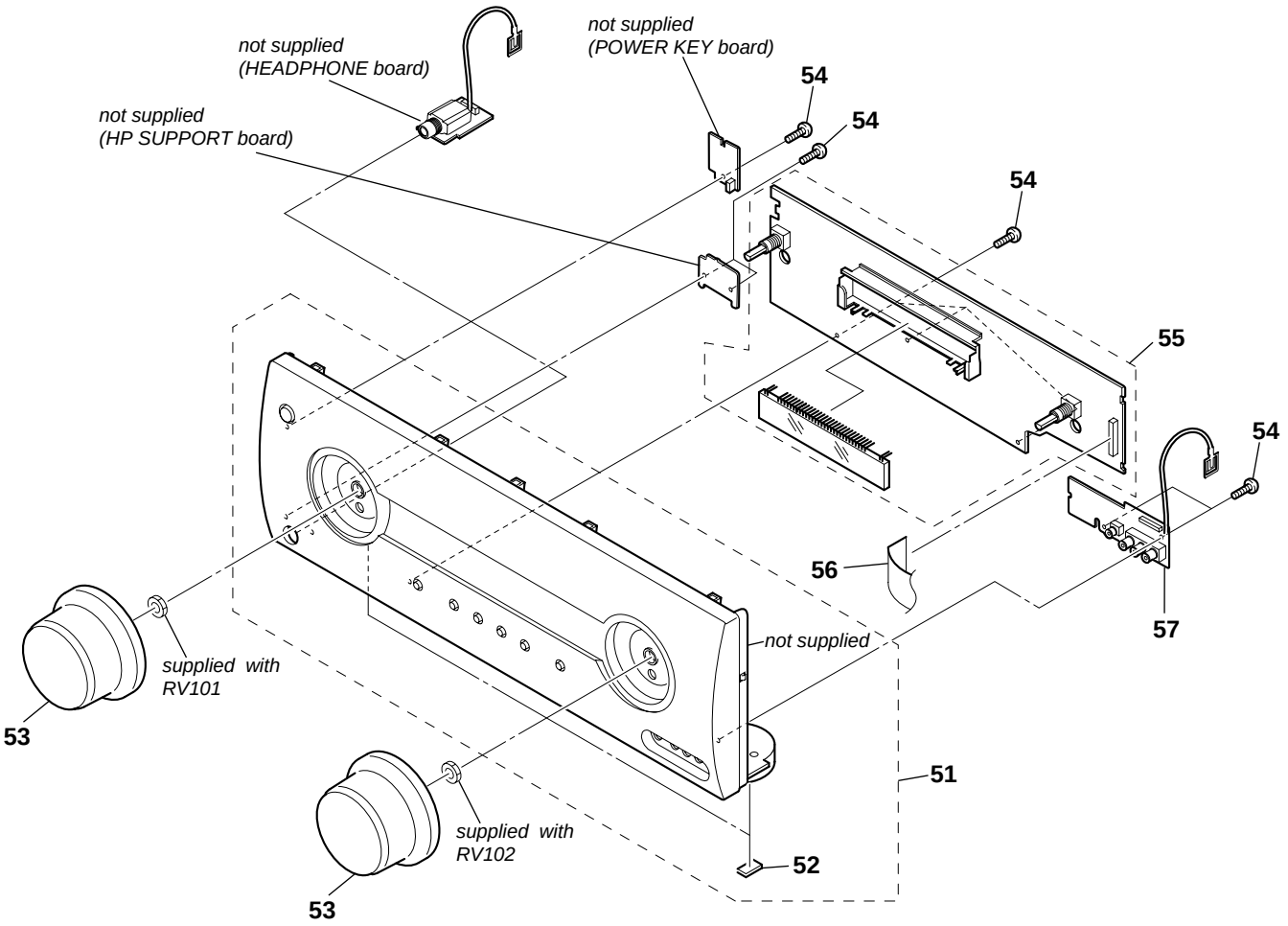

Note: If connector, FFC is replaced, install it after bending it in the same form as that before replacement.

Ref. No.	Part No.	Description	Remark
51	X-2342-686-1	FRONT PANEL ASSY	
52	4-977-358-01	CUSHION	
53	4-127-215-01	KNOB, VOLUME	
54	3-087-053-01	+BVTP2.6 (3CR)	
55	A-1641-554-A	DISPLAY BOARD, COMPLETE	
56	1-828-372-11	WIRE (FLAT TYPE) (2 CORE)	
57	A-1641-555-A	VIDEO2 DCAC BOARD, COMPLETE	

7-3. BACK PANEL SECTION

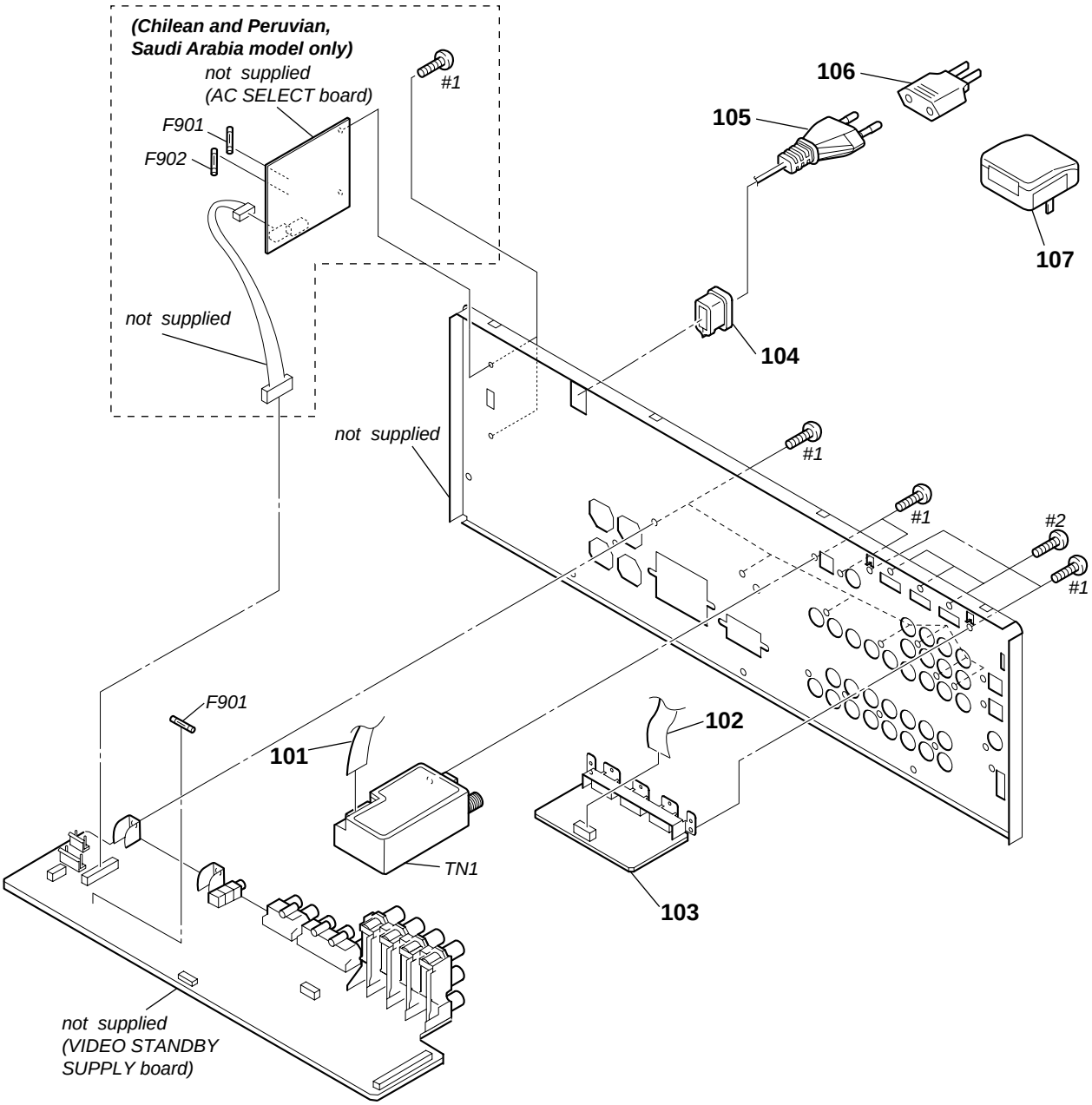

Note: If connector, FFC is replaced, install it after bending it in the same form as that before replacement.

Ref. No.	Part No.	Description	Remark
101	1-828-956-11	WIRE (FLAT TYPE) (9 CORE)	
102	1-784-368-51	CONNECTOR, FFC/FPC 9P	
103	A-1519-237-A	HDMI SW BOARD, COMPLETE	
104	3-703-244-00	CORD BUSH (2104) (EXCEPT TH)	
104	4-966-267-12	BUSHING (FBS001), CORD (TH)	
⚠ 105	1-777-071-83	CORD, POWER (EXCEPT AR, TH)	
⚠ 105	1-829-387-11	CORD, POWER (AR)	
⚠ 105	1-834-288-11	CORD, POWER (TH)	
⚠ 106	1-569-008-33	ADAPTOR, CONVERSION 2P (EA)	
⚠ 107	1-770-019-71	ADAPTOR, CONVERSION PLUG 3P (EA)	

Ref. No.	Part No.	Description	Remark
⚠ F901	1-532-464-33	FUSE (T2.5AL 250V) (EXCEPT E51, EA)	
⚠ F902	1-532-504-33	FUSE (T4AL 250V) (EA)	
⚠ F902	1-532-505-33	FUSE (T5AL 250V) (E51)	
⚠ F903	1-532-464-33	FUSE (T2.5AL 250V) (E51, EA)	
TN1	1-693-728-31	TUNER (FM/AM) (E51)	
TN1	1-693-749-21	TUNER (FM/AM) (EXCEPT E51)	
#1	7-685-646-79	SCREW +BVTP 3X8 TYPE2 IT-3	
#2	7-685-871-01	SCREW +BVTT 3X6 (S)	

7-4. CHASSIS SECTION

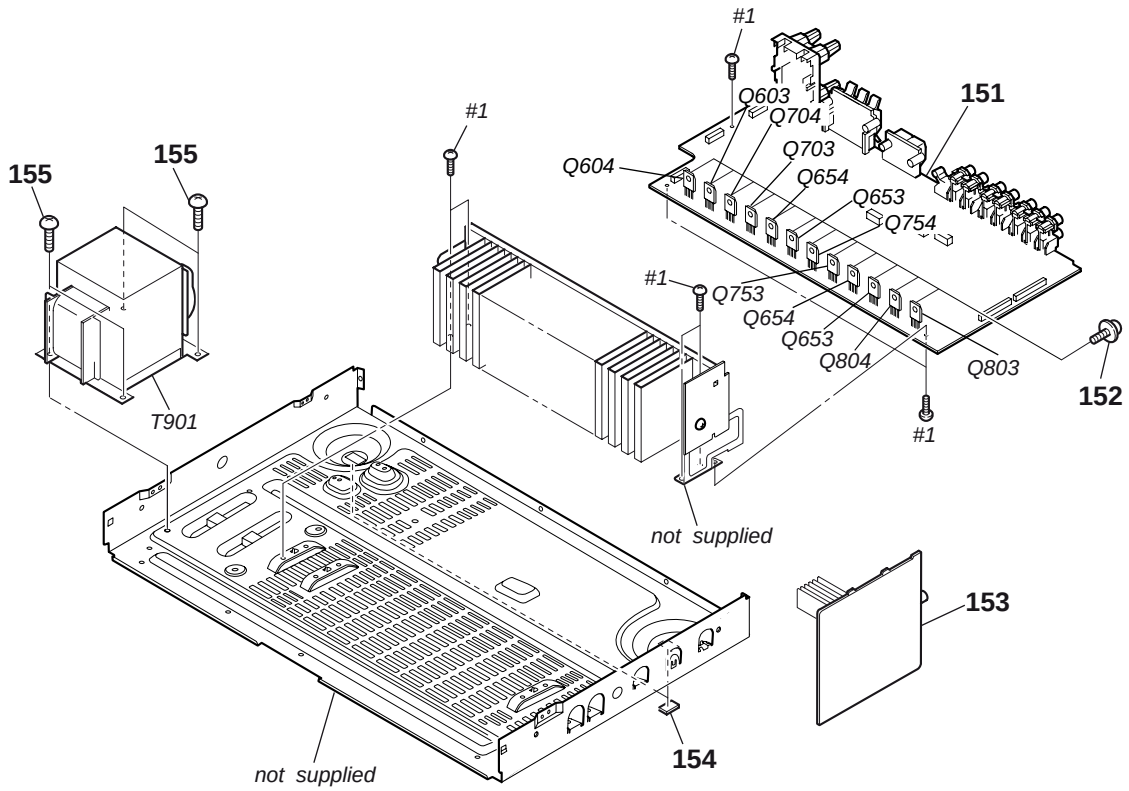

Ref. No.	Part No.	Description	Remark
151	A-1660-430-A	MAIN BOARD, COMPLETE (EXCEPT E51, EA)	
151	A-1707-435-A	MAIN BOARD, COMPLETE (E51, EA)	
152	3-905-609-01	SCREW (TRANSISTOR)	
153	A-1660-449-A	DIGITAL AB BOARD, COMPLETE	(MY, SAF, SP, TH)
153	A-1660-450-A	DIGITAL AB BOARD, COMPLETE (AR)	
153	A-1660-452-A	DIGITAL AB BOARD, COMPLETE (E51)	
153	A-1728-637-A	DIGITAL AB BOARD, COMPLETE (EA)	
154	4-977-358-01	CUSHION	
155	4-249-675-01	+BV SUMITITE S 4X6 ROUND	
Q603	6-702-390-01	TRANSISTOR MN2488-OPY-MK	
Q604	6-702-391-01	TRANSISTOR MP1620-OPY-MK	
Q653	6-702-390-01	TRANSISTOR MN2488-OPY-MK	
Q654	6-702-391-01	TRANSISTOR MP1620-OPY-MK	

Ref. No.	Part No.	Description	Remark
Q703	6-702-390-01	TRANSISTOR MN2488-OPY-MK	
Q704	6-702-391-01	TRANSISTOR MP1620-OPY-MK	
Q753	6-702-390-01	TRANSISTOR MN2488-OPY-MK	
Q754	6-702-391-01	TRANSISTOR MP1620-OPY-MK	
Q803	6-702-390-01	TRANSISTOR MN2488-OPY-MK	
Q804	6-702-391-01	TRANSISTOR MP1620-OPY-MK	
Q853	6-702-390-01	TRANSISTOR MN2488-OPY-MK	
Q854	6-702-391-01	TRANSISTOR MP1620-OPY-MK	
⚠ T901	1-445-696-11	TRANSFORMER, POWER (MAIN) (MY, SAF, SP)	
⚠ T901	1-445-711-11	POWER TRANSFORMER (MAIN) (E51)	
⚠ T901	1-445-724-11	POWER TRANSFORMER (MAIN) (AR, TH)	
⚠ T901	1-445-750-11	POWER TRANSFORMER (MAIN) (EA)	
#1	7-685-646-79	SCREW +BVTP 3X8 TYPE2 IT-3	

SECTION 8
ELECTRICAL PARTS LIST

Note:

- Due to standardization, replacements in the parts list may be different from the parts specified in the diagrams or the components used on the set.
- -XX and -X mean standardized parts, so they may have some difference from the original one.
- Items marked "*" are not stocked since they are seldom required for routine service.
  Some delay should be anticipated when ordering these items.
- CAPACITORS
  uF: µF
- COILS
  uH: µH
- RESISTORS
  All resistors are in ohms.
  METAL: Metal-film resistor.
  METAL OXIDE: Metal oxide-film resistor.
  F: nonflammable
- SEMICONDUCTORS
  In each case, u: µ, for example:
  uA. . : µA. . , uPA. . , µPA. . ,
  uPB. . : µPB. . , uPC. . , µPC. . ,
  uPD. . : µPD. .
- Abbreviation
  AR : Argentina model
  E51 : Chilean and Peruvian models
  MY : Malaysia model
  SAF : South Africa model
  SP : Singapore model
  EA : Saudi Arabia model
  TH : Thai model

When indicating parts by reference number, please include the board name.

The components identified by mark ⚠ or dotted line with mark ⚠ are critical for safety.
Replace only with part number specified.

Ref. No.	Part No.	Description			Remark
		AC SELECT BOARD (E51, EA)			
		**********			
		< CONNECTOR >			
CNP903	1-568-106-11	PIN, CONNECTOR (3.96mm PITCH) 4P			
CNP905	1-564-687-11	PIN, CONNECTOR (3.96mm PITCH) 3P			
		< FUSE HOLDER >			
FH903	1-533-217-41	HOLDER, FUSE			
FH904	1-533-217-41	HOLDER, FUSE			
FH905	1-533-217-41	HOLDER, FUSE			
FH906	1-533-217-41	HOLDER, FUSE			
		< SWITCH >			
S901	1-571-437-21	SWITCH, POWER VOLTAGE CHANGE (VOLTAGE SELECTOR)			
**********					
		CONNECTION BOARD			
		**********			
		< CONNECTOR >			
CNP511	1-778-226-21	CONNECTOR, BOARD TO BOARD 6P			
CNS510	1-778-227-41	CONNECTOR, BOARD TO BOARD 6P			
**********					
	A-1660-449-A	DIGITAL AB BOARD, COMPLETE (MY, SAF, SP, TH)			
	A-1660-450-A	DIGITAL AB BOARD, COMPLETE (AR)			
	A-1660-452-A	DIGITAL AB BOARD, COMPLETE (E51)			
	A-1728-637-A	DIGITAL AB BOARD, COMPLETE (EA)			
		**********			
		< CAPACITOR >			
C1001	1-162-970-11	CERAMIC CHIP	0.01uF	10%	25V
C1002	1-162-964-11	CERAMIC CHIP	0.001uF	10%	50V
C1003	1-162-970-11	CERAMIC CHIP	0.01uF	10%	25V
C1004	1-162-964-11	CERAMIC CHIP	0.001uF	10%	50V
C1005	1-100-566-91	CERAMIC CHIP	0.1uF	10%	25V
C1006	1-125-777-11	CERAMIC CHIP	0.1uF	10%	10V
C1007	1-165-746-31	ELECT	22uF	20%	50V
C1009	1-126-947-11	ELECT	47uF	20%	35V
C1010	1-125-777-11	CERAMIC CHIP	0.1uF	10%	10V
C1011	1-162-970-11	CERAMIC CHIP	0.01uF	10%	25V
C1012	1-162-964-11	CERAMIC CHIP	0.001uF	10%	50V
C1013	1-100-566-91	CERAMIC CHIP	0.1uF	10%	25V
C1014	1-162-970-11	CERAMIC CHIP	0.01uF	10%	25V
C1021	1-137-980-91	CERAMIC CHIP	0.47uF	10%	50V
C1022	1-135-372-31	ELECT	470uF	20%	10V
C1024	1-137-980-91	CERAMIC CHIP	0.47uF	10%	50V
C1025	1-128-942-31	ELECT	1000uF	20%	6.3V
C1028	1-125-777-11	CERAMIC CHIP	0.1uF	10%	10V
C1039	1-125-777-11	CERAMIC CHIP	0.1uF	10%	10V
C1041	1-125-777-11	CERAMIC CHIP	0.1uF	10%	10V
C1044	1-164-848-11	CERAMIC CHIP	8PF	0.5PF	50V
C1048	1-164-848-11	CERAMIC CHIP	8PF	0.5PF	50V
C1050	1-125-777-11	CERAMIC CHIP	0.1uF	10%	10V
C1051	1-125-777-11	CERAMIC CHIP	0.1uF	10%	10V
C1052	1-125-777-11	CERAMIC CHIP	0.1uF	10%	10V
C1053	1-125-777-11	CERAMIC CHIP	0.1uF	10%	10V
C1054	1-125-777-11	CERAMIC CHIP	0.1uF	10%	10V
C1055	1-125-777-11	CERAMIC CHIP	0.1uF	10%	10V
C1056	1-125-777-11	CERAMIC CHIP	0.1uF	10%	10V
C1057	1-125-777-11	CERAMIC CHIP	0.1uF	10%	10V
C1058	1-125-777-11	CERAMIC CHIP	0.1uF	10%	10V
C1059	1-125-777-11	CERAMIC CHIP	0.1uF	10%	10V
C1060	1-125-777-11	CERAMIC CHIP	0.1uF	10%	10V
C1061	1-125-777-11	CERAMIC CHIP	0.1uF	10%	10V
C1062	1-117-370-11	CERAMIC CHIP	10uF		10V
C1063	1-126-923-91	ELECT	220uF	20%	10V
C1064	1-126-923-91	ELECT	220uF	20%	10V
C1065	1-125-777-11	CERAMIC CHIP	0.1uF	10%	10V
C1066	1-164-933-11	CERAMIC CHIP	220PF	10%	50V
C1067	1-164-933-11	CERAMIC CHIP	220PF	10%	50V
C1068	1-164-933-11	CERAMIC CHIP	220PF	10%	50V
C1069	1-125-777-11	CERAMIC CHIP	0.1uF	10%	10V
C1070	1-125-777-11	CERAMIC CHIP	0.1uF	10%	10V
C1072	1-125-777-11	CERAMIC CHIP	0.1uF	10%	10V
C1073	1-126-923-91	ELECT	220uF	20%	10V
C1074	1-100-566-91	CERAMIC CHIP	0.1uF	10%	25V
C1075	1-137-980-91	CERAMIC CHIP	0.47uF	10%	50V
C1076	1-126-923-91	ELECT	220uF	20%	10V
C1077	1-125-777-11	CERAMIC CHIP	0.1uF	10%	10V
C1078	1-117-370-11	CERAMIC CHIP	10uF		10V
C1080	1-125-777-11	CERAMIC CHIP	0.1uF	10%	10V
C1083	1-125-777-11	CERAMIC CHIP	0.1uF	10%	10V
C1084	1-125-777-11	CERAMIC CHIP	0.1uF	10%	10V
C1085	1-125-777-11	CERAMIC CHIP	0.1uF	10%	10V
C1087	1-125-777-11	CERAMIC CHIP	0.1uF	10%	10V
C1088	1-125-777-11	CERAMIC CHIP	0.1uF	10%	10V
C1089	1-125-777-11	CERAMIC CHIP	0.1uF	10%	10V
C1092	1-117-370-11	CERAMIC CHIP	10uF		10V

DIGITAL AB

Ref. No.	Part No.	Description			Remark
C1093	1-125-777-11	CERAMIC CHIP	0.1uF	10%	10V
C1094	1-125-777-11	CERAMIC CHIP	0.1uF	10%	10V
C1095	1-125-777-11	CERAMIC CHIP	0.1uF	10%	10V
C1096	1-125-777-11	CERAMIC CHIP	0.1uF	10%	10V
C1097	1-125-777-11	CERAMIC CHIP	0.1uF	10%	10V
C1098	1-125-777-11	CERAMIC CHIP	0.1uF	10%	10V
C1099	1-100-567-81	CERAMIC CHIP	0.01uF	10%	25V
C1100	1-125-777-11	CERAMIC CHIP	0.1uF	10%	10V
C1102	1-100-566-91	CERAMIC CHIP	0.1uF	10%	25V
C1103	1-125-777-11	CERAMIC CHIP	0.1uF	10%	10V
C1104	1-100-567-81	CERAMIC CHIP	0.01uF	10%	25V
C1105	1-117-370-11	CERAMIC CHIP	10uF		10V
C1107	1-125-777-11	CERAMIC CHIP	0.1uF	10%	10V
C1108	1-125-777-11	CERAMIC CHIP	0.1uF	10%	10V
C1109	1-125-777-11	CERAMIC CHIP	0.1uF	10%	10V
C1110	1-125-777-11	CERAMIC CHIP	0.1uF	10%	10V
C1111	1-126-947-11	ELECT	47uF	20%	35V
C1112	1-125-777-11	CERAMIC CHIP	0.1uF	10%	10V
C1113	1-125-777-11	CERAMIC CHIP	0.1uF	10%	10V
C1114	1-125-777-11	CERAMIC CHIP	0.1uF	10%	10V
C1115	1-125-777-11	CERAMIC CHIP	0.1uF	10%	10V
C1116	1-125-777-11	CERAMIC CHIP	0.1uF	10%	10V
C1117	1-125-777-11	CERAMIC CHIP	0.1uF	10%	10V
C1118	1-125-777-11	CERAMIC CHIP	0.1uF	10%	10V
C1119	1-125-777-11	CERAMIC CHIP	0.1uF	10%	10V
C1120	1-125-777-11	CERAMIC CHIP	0.1uF	10%	10V
C1121	1-125-777-11	CERAMIC CHIP	0.1uF	10%	10V
C1122	1-125-777-11	CERAMIC CHIP	0.1uF	10%	10V
C1123	1-125-777-11	CERAMIC CHIP	0.1uF	10%	10V
C1124	1-125-777-11	CERAMIC CHIP	0.1uF	10%	10V
C1127	1-125-777-11	CERAMIC CHIP	0.1uF	10%	10V
C1128	1-125-777-11	CERAMIC CHIP	0.1uF	10%	10V
C1129	1-164-947-11	CERAMIC CHIP	0.01uF		50V
C1131	1-164-947-11	CERAMIC CHIP	0.01uF		50V
C1132	1-164-947-11	CERAMIC CHIP	0.01uF		50V
C1133	1-107-826-11	CERAMIC CHIP	0.1uF	10%	16V
C1137	1-100-567-81	CERAMIC CHIP	0.01uF	10%	25V
C1138	1-125-777-11	CERAMIC CHIP	0.1uF	10%	10V
C1139	1-100-566-91	CERAMIC CHIP	0.1uF	10%	25V
C1140	1-125-777-11	CERAMIC CHIP	0.1uF	10%	10V
C1142	1-125-777-11	CERAMIC CHIP	0.1uF	10%	10V
C1149	1-164-933-11	CERAMIC CHIP	220PF	10%	50V
C1169	1-164-933-11	CERAMIC CHIP	220PF	10%	50V
C1171	1-164-947-11	CERAMIC CHIP	0.01uF		50V
C1172	1-164-947-11	CERAMIC CHIP	0.01uF		50V
C1175	1-165-989-11	CERAMIC CHIP	10uF	10%	6.3V
C1179	1-126-923-91	ELECT	220uF	20%	10V
C1191	1-125-777-11	CERAMIC CHIP	0.1uF	10%	10V
C1192	1-117-370-11	CERAMIC CHIP	10uF		10V
C1199	1-125-777-11	CERAMIC CHIP	0.1uF	10%	10V
C1253	1-162-960-11	CERAMIC CHIP	220PF	10%	50V
C1254	1-164-933-11	CERAMIC CHIP	220PF	10%	50V
C1255	1-164-933-11	CERAMIC CHIP	220PF	10%	50V
C1258	1-164-933-11	CERAMIC CHIP	220PF	10%	50V
C1292	1-117-370-11	CERAMIC CHIP	10uF		10V
C1299	1-125-777-11	CERAMIC CHIP	0.1uF	10%	10V
C1320	1-164-874-11	CERAMIC CHIP	100PF	5%	50V
C1351	1-100-566-91	CERAMIC CHIP	0.1uF	10%	25V
C1354	1-100-566-91	CERAMIC CHIP	0.1uF	10%	25V
C1355	1-126-965-91	ELECT	22uF	20%	50V

Ref. No.	Part No.	Description			Remark
C1358	1-125-777-11	CERAMIC CHIP	0.1uF	10%	10V
C1359	1-126-916-11	ELECT	1000uF	20%	6.3V
C1361	1-125-777-11	CERAMIC CHIP	0.1uF	10%	10V
C1370	1-137-649-31	ELECT	220uF	20%	10V
C1401	1-125-777-11	CERAMIC CHIP	0.1uF	10%	10V
C1402	1-126-964-11	ELECT	10uF	20%	50V
C1405	1-125-777-11	CERAMIC CHIP	0.1uF	10%	10V
C1406	1-126-964-11	ELECT	10uF	20%	50V
C1414	1-164-947-11	CEREMIC CHIP	0.01uF		5
C1415	1-164-947-11	CEREMIC CHIP	0.01uF		5
C1418	1-112-100-11	ELECT	10uF	20%	50V
C1428	1-126-964-11	ELECT	10uF	20%	50V
C1448	1-126-964-11	ELECT	10uF	20%	50V
C1450	1-125-777-11	CERAMIC CHIP	0.1uF	10%	10V
C1451	1-125-777-11	CERAMIC CHIP	0.1uF	10%	10V
C1455	1-125-777-11	CERAMIC CHIP	0.1uF	10%	10V
C1457	1-112-079-11	ELECT	220uF	20%	10V
C1458	1-112-100-11	ELECT	10uF	20%	50V
C1459	1-125-777-11	CERAMIC CHIP	0.1uF	10%	10V
C1460	1-112-079-11	ELECT	220uF	20%	10V
C1461	1-112-100-11	ELECT	10uF	20%	50V
C1465	1-112-100-11	ELECT	10uF	20%	50V
C1468	1-126-964-11	ELECT	10uF	20%	50V
C1478	1-112-100-11	ELECT	10uF	20%	50V
C1488	1-112-100-11	ELECT	10uF	20%	50V
C1489	1-164-933-11	CERAMIC CHIP	220PF	10%	50V
C1601	1-100-566-91	CERAMIC CHIP	0.1uF	10%	25V
C1602	1-100-566-91	CERAMIC CHIP	0.1uF	10%	25V
C1604	1-125-777-11	CERAMIC CHIP	0.1uF	10%	10V
C1605	1-125-777-11	CERAMIC CHIP	0.1uF	10%	10V
C1620	1-125-777-11	CERAMIC CHIP	0.1uF	10%	10V
C1653	1-126-964-11	ELECT	10uF	20%	50V
C1654	1-125-777-11	CERAMIC CHIP	0.1uF	10%	10V
C1910	1-165-722-11	ELECT	100uF	20%	10V
C1911	1-100-566-91	CERAMIC CHIP	0.1uF	10%	25V
C1913	1-137-980-91	CERAMIC	0.47uF	10%	50V
C1914	1-126-947-11	ELECT	47uF	20%	35V
C1919	1-126-965-11	ELECT	22uF	20%	50V
C1923	1-126-947-11	ELECT	47uF	20%	35V
C2108	1-162-970-11	CERAMIC CHIP	0.01uF	10%	25V
C2109	1-107-826-11	CERAMIC CHIP	0.1uF	10%	16V
C2110	1-107-826-11	CERAMIC CHIP	0.1uF	10%	16V
C2111	1-107-826-11	CERAMIC CHIP	0.1uF	10%	16V
C2112	1-164-820-11	CERAMIC CHIP	27uF	5%	50V
C2113	1-164-826-11	CERAMIC CHIP	33uF	5%	50V
C2114	1-107-826-11	CERAMIC CHIP	0.1uF	10%	16V
C2115	1-107-826-11	CERAMIC CHIP	0.1uF	10%	16V
C2116	1-112-077-11	ELECT	1000uF	20%	6.3V
C2117	1-107-826-11	CERAMIC CHIP	0.1uF	10%	16V
C2118	1-107-826-11	CERAMIC CHIP	0.1uF	10%	16V
C2119	1-112-117-11	ELECT	220uF	20%	10V
C2120	1-164-227-11	CERAMIC CHIP	0.022uF	10%	25V
C2121	1-107-826-11	CERAMIC CHIP	0.1uF	10%	16V
C2122	1-162-962-11	CERAMIC CHIP	470PF	10%	50V
C2201	1-164-940-11	CERAMIC CHIP	0.0033uF	10%	16V
C2202	1-164-940-11	CERAMIC CHIP	0.0033uF	10%	16V
C2203	1-164-940-11	CERAMIC CHIP	0.0033uF	10%	16V
C2204	1-164-940-11	CERAMIC CHIP	0.0033uF	10%	16V
C2205	1-164-940-11	CERAMIC CHIP	0.0033uF	10%	16V
C2206	1-164-940-11	CERAMIC CHIP	0.0033uF	10%	16V

Ref. No.	Part No.	Description			Remark
C2207	1-164-940-11	CERAMIC CHIP	0.0033uF	10%	16V
C2217	1-162-970-11	CERAMIC CHIP	0.01uF	10%	25V
C2218	1-117-720-11	CERAMIC CHIP	4.7uF		10V
C2219	1-107-826-11	CERAMIC CHIP	0.1uF	10%	16V
C2220	1-162-964-11	CERAMIC CHIP	0.001uF	10%	50V
C2221	1-107-826-11	CERAMIC CHIP	0.1uF	10%	16V
		< CONNECTOR >			
CNP505	1-774-744-21	CONNECTOR, BOARD TO BOARD 18P			
CNS501	1-573-829-11	BOARD TO BOARD CONNECTOR 15P			
CNS502	1-770-828-41	CONNECTOR, BOARD TO BOARD 16P			
CNS503	1-820-119-41	CONNECTOR, FFC/FPC 21P			
CNS504	1-784-861-51	CONNECTOR, FFC (LIF (NON-ZIF)) 9P			
CNS507	1-784-770-11	CONNECTOR, FFC 9P			
CNS510	1-784-368-51	CONNECTOR, FFC/FPC 9P			
		< DIODE >			
D1001	8-719-053-18	DIODE 1SR154-400TE-25			
D1003	8-719-049-09	DIODE 1SS367-T3SONY			
D1004	8-719-049-09	DIODE 1SS367-T3SONY			
D1101	6-501-817-01	DIODE MA2J1110GLS0			
D1301	8-719-989-03	DIODE DAN222			
D1302	8-719-989-03	DIODE DAN222			
D1310	6-501-817-01	DIODE MA2J1110GLS0			
D1501	8-719-049-09	DIODE 1SS367-T3SONY			
D1502	8-719-049-09	DIODE 1SS367-T3SONY			
D1503	8-719-049-09	DIODE 1SS367-T3SONY			
D1504	8-719-049-09	DIODE 1SS367-T3SONY			
D1505	8-719-049-09	DIODE 1SS367-T3SONY			
		< FERRITE BEAD >			
FB1018	1-469-139-21	FERRITE, EMI (SMD) (2012)			
FB1101	1-400-862-11	BEAD, FERRITE			
FB1102	1-400-862-11	BEAD, FERRITE			
FB1103	1-400-862-11	BEAD, FERRITE			
FB1104	1-216-295-91	SHORT CHIP 0			
FB1105	1-400-862-11	BEAD, FERRITE			
FB1112	1-469-670-21	FERRITE, EMI (SMD) (2012)			
FB1113	1-400-862-11	BEAD, FERRITE			
FB1117	1-400-862-11	BEAD, FERRITE			
FB1308	1-400-862-11	BEAD, FERRITE			
FB1310	1-400-862-11	BEAD, FERRITE			
FB1311	1-400-862-11	BEAD, FERRITE			
FB1350	1-400-862-11	BEAD, FERRITE			
FB1403	1-400-862-11	BEAD, FERRITE			
FB1405	1-400-862-11	BEAD, FERRITE			
FB1452	1-400-862-11	BEAD, FERRITE			
FB1453	1-400-862-11	BEAD, FERRITE			
FB2203	1-469-139-21	FERRITE, EMI (SMD) (2012)			
FB2204	1-469-139-21	FERRITE, EMI (SMD) (2012)			
FB2205	1-469-152-11	FERRITE, EMI (SMD) (2012)			
FB2206	1-469-139-21	FERRITE, EMI (SMD) (2012)			
		< IC >			
IC1002	6-710-766-01	IC BD12KA5FP-E2			
IC1014	8-759-447-77	IC TC7WH74FU (TE12R)			
IC1101	6-808-591-02	IC MB90F046PF-G-123E1			
IC1111	6-702-913-01	IC S-80929CNMC-G8ZT2G			
IC1131	not supplied	IC BR24S16FJ -WE2			

Note: IC1131 cannot exchange with single. When IC1131 is damaged, exchange the entire mounted board.

Ref. No.	Part No.	Description			Remark
IC1201	6-713-642-01	IC LC89058W-E			
IC1303	8-759-096-87	IC TC7WU04FU (TE12R)			
IC1351	6-600-466-01	IC TORX147L (SONY) (DIGITAL OPTICAL SAT IN)			
IC1352	6-600-466-01	IC TORX147L (SONY) (DIGITAL OPTICAL BD IN)			
IC1401	6-710-554-01	IC PCM1808PWR			
IC1452	6-711-874-01	IC WM8768GEDS/R			
IC1501	6-706-764-01	IC ADSP21266SKSTZ-2C			
IC1902	6-713-032-01	IC KIA7809API-U/PF			
IC1904	6-705-468-01	IC BA33BC0FP-E2			
IC1905	6-706-886-01	IC KIA78D33PI			
IC1906	6-712-614-01	IC SI-3050KM-TLS			
IC2210	6-705-337-01	IC TK11150CSCL-G			
		< JACK >			
J1301	1-784-431-11	JACK, PIN 1P (DIGITAL COAXIAL DVD IN)			
		< CONNECTOR >			
J1302	1-817-615-21	CONNECTOR, SQUARE TYPE (RECE) (DMPORT)			
		< JUMPER RESISTOR/CAPASITOR >			
JR1001	1-211-950-11	SHORT CHIP	0		
JR1002	1-211-950-11	SHORT CHIP	0		
JR1100	1-211-950-11	SHORT CHIP	0		
JR1101	1-211-950-11	SHORT CHIP	0		
JR1102	1-211-950-11	SHORT CHIP	0		
JR1105	1-211-950-11	SHORT CHIP	0		
JR1109	1-216-864-11	SHORT CHIP	0		
JR1112	1-211-950-11	SHORT CHIP	0		
JR1113	1-211-950-11	SHORT CHIP	0		
JR1114	1-211-950-11	SHORT CHIP	0		
JR1115	1-211-950-11	SHORT CHIP	0		
		< RESISTOR >			
R1001	1-216-821-11	METAL CHIP	1K	5%	1/10W
R1002	1-216-821-11	METAL CHIP	1K	5%	1/10W
R1003	1-216-821-11	METAL CHIP	1K	5%	1/10W
R1004	1-216-821-11	METAL CHIP	1K	5%	1/10W
R1005	1-216-821-11	METAL CHIP	1K	5%	1/10W
R1006	1-216-821-11	METAL CHIP	1K	5%	1/10W
R1007	1-216-821-11	METAL CHIP	1K	5%	1/10W
R1008	1-216-821-11	METAL CHIP	1K	5%	1/10W
R1010	1-216-809-11	METAL CHIP	100	5%	1/10W
R1011	1-216-809-11	METAL CHIP	100	5%	1/10W
R1017	1-216-816-11	METAL CHIP	390	5%	1/10W
R1018	1-216-815-11	METAL CHIP	330	5%	1/10W
R1021	1-216-809-11	METAL CHIP	100	5%	1/10W
R1022	1-216-809-11	METAL CHIP	100	5%	1/10W
R1023	1-216-816-11	METAL CHIP	390	5%	1/10W
R1027	1-216-825-11	METAL CHIP	2.2K	5%	1/10W
R1028	1-216-801-11	METAL CHIP	22	5%	1/10W
R1029	1-216-801-11	METAL CHIP	22	5%	1/10W
R1030	1-216-801-11	METAL CHIP	22	5%	1/10W
R1031	1-216-801-11	METAL CHIP	22	5%	1/10W
R1033	1-216-833-11	METAL CHIP	10K	5%	1/10W
R1034	1-216-821-11	METAL CHIP	1K	5%	1/10W
R1035	1-216-833-11	METAL CHIP	10K	5%	1/10W
R1036	1-216-864-11	SHORT CHIP	0		
R1037	1-216-833-11	METAL CHIP	10K	5%	1/10W
R1038	1-216-801-11	METAL CHIP	22	5%	1/10W

Ref. No.	Part No.	Description			Remark
R1039	1-216-833-11	METAL CHIP	10K	5%	1/10W
R1040	1-216-801-11	METAL CHIP	22	5%	1/10W
R1043	1-216-801-11	METAL CHIP	22	5%	1/10W
R1048	1-216-857-11	METAL CHIP	1M	5%	1/10W
R1049	1-216-817-11	METAL CHIP	470	5%	1/10W
R1062	1-216-801-11	METAL CHIP	22	5%	1/10W
R1063	1-216-801-11	METAL CHIP	22	5%	1/10W
R1064	1-216-801-11	METAL CHIP	22	5%	1/10W
R1068	1-216-801-11	METAL CHIP	22	5%	1/10W
R1070	1-216-864-11	SHORT CHIP	0		
R1072	1-216-827-11	METAL CHIP	3.3K	5%	1/10W
R1073	1-216-827-11	METAL CHIP	3.3K	5%	1/10W
R1074	1-216-809-11	METAL CHIP	100	5%	1/10W
R1080	1-216-864-11	SHORT CHIP	0		
R1081	1-216-864-11	SHORT CHIP	0		
R1083	1-216-833-11	METAL CHIP	10K	5%	1/10W
R1084	1-216-809-11	METAL CHIP	100	5%	1/10W
R1088	1-216-833-11	METAL CHIP	10K	5%	1/10W
R1105	1-216-833-11	METAL CHIP	10K	5%	1/10W
R1106	1-216-809-11	METAL CHIP	100	5%	1/10W
R1107	1-216-825-11	METAL CHIP	2.2K	5%	1/10W
R1110	1-216-825-11	METAL CHIP	2.2K	5%	1/10W
R1111	1-216-825-11	METAL CHIP	2.2K	5%	1/10W
R1112	1-216-809-11	METAL CHIP	100	5%	1/10W
R1116	1-216-809-11	METAL CHIP	100	5%	1/10W
R1117	1-216-821-11	METAL CHIP	1K	5%	1/10W
R1118	1-216-821-11	METAL CHIP	1K	5%	1/10W
R1119	1-216-809-11	METAL CHIP	100	5%	1/10W
R1122	1-216-809-11	METAL CHIP	100	5%	1/10W
R1123	1-216-809-11	METAL CHIP	100	5%	1/10W
R1124	1-216-809-11	METAL CHIP	100	5%	1/10W
R1127	1-216-809-11	METAL CHIP	100	5%	1/10W
R1128	1-216-809-11	METAL CHIP	100	5%	1/10W
R1129	1-216-809-11	METAL CHIP	100	5%	1/10W
R1130	1-216-809-11	METAL CHIP	100	5%	1/10W
R1131	1-216-809-11	METAL CHIP	100	5%	1/10W
R1134	1-216-801-11	METAL CHIP	22	5%	1/10W
R1148	1-216-803-11	METAL CHIP	33	5%	1/10W
R1151	1-216-809-11	METAL CHIP	100	5%	1/10W
R1152	1-216-809-11	METAL CHIP	100	5%	1/10W
R1153	1-216-809-11	METAL CHIP	100	5%	1/10W
R1155	1-216-809-11	METAL CHIP	100	5%	1/10W
R1158	1-216-833-11	METAL CHIP	10K	5%	1/10W
R1159	1-216-827-11	METAL CHIP	3.3K	5%	1/10W
R1162	1-216-809-11	METAL CHIP	100	5%	1/10W
R1164	1-216-833-11	METAL CHIP	10K	5%	1/10W
R1174	1-216-809-11	METAL CHIP	100	5%	1/10W
R1175	1-216-809-11	METAL CHIP	100	5%	1/10W
R1179	1-216-833-11	METAL CHIP	10K	5%	1/10W
R1180	1-216-833-11	METAL CHIP	10K	5%	1/10W
R1181	1-216-833-11	METAL CHIP	10K	5%	1/10W
R1182	1-216-833-11	METAL CHIP	10K	5%	1/10W
R1183	1-216-835-11	METAL CHIP	15K	5%	1/10W
R1186	1-216-833-11	METAL CHIP	10K	5%	1/10W
R1187	1-216-833-11	METAL CHIP	10K	5%	1/10W
R1189	1-216-833-11	METAL CHIP	10K	5%	1/10W
R1190	1-216-833-11	METAL CHIP	10K	5%	1/10W
R1191	1-216-833-11	METAL CHIP	10K	5%	1/10W
R1192	1-216-833-11	METAL CHIP	10K	5%	1/10W

Ref. No.	Part No.	Description			Remark
R1193	1-216-825-11	METAL CHIP	2.2K	5%	1/10W (AR)
R1193	1-216-837-11	METAL CHIP	22K	5%	1/10W (E51)
R1193	1-216-841-11	METAL CHIP	47K	5%	1/10W (MY, SAF, SP, TH)
R1193	1-216-864-11	SHORT CHIP	0 (EA)		
R1194	1-216-833-11	METAL CHIP	10K	5%	1/10W (MY, SAF, SP, TH)
R1194	1-216-841-11	METAL CHIP	47K	5%	1/10W (AR, E51)
R1199	1-216-809-11	METAL CHIP	100	5%	1/10W
R1200	1-216-809-11	METAL CHIP	100	5%	1/10W
R1203	1-216-809-11	METAL CHIP	100	5%	1/10W
R1253	1-216-833-11	METAL CHIP	10K	5%	1/10W
R1260	1-216-821-11	METAL CHIP	1K	5%	1/10W
R1261	1-216-821-11	METAL CHIP	1K	5%	1/10W
R1310	1-216-295-91	SHORT CHIP	0		
R1350	1-216-833-11	METAL CHIP	10K	5%	1/10W
R1351	1-216-809-11	METAL CHIP	100	5%	1/10W
R1354	1-216-809-11	METAL CHIP	100	5%	1/10W
R1355	1-218-285-11	METAL CHIP	75	5%	1/10W
R1356	1-216-817-11	METAL CHIP	470	5%	1/10W
R1357	1-216-841-11	METAL CHIP	47K	5%	1/10W
R1358	1-216-853-11	METAL CHIP	470K	5%	1/10W
R1359	1-216-809-11	METAL CHIP	100	5%	1/10W
R1362	1-216-855-11	METAL CHIP	680K	5%	1/10W
R1367	1-216-829-11	METAL CHIP	4.7K	5%	1/10W
R1401	1-216-809-11	METAL CHIP	100	5%	1/10W
R1416	1-216-821-11	METAL CHIP	1K	5%	1/10W
R1426	1-216-821-11	METAL CHIP	1K	5%	1/10W
R1436	1-216-821-11	METAL CHIP	1K	5%	1/10W
R1456	1-216-821-11	METAL CHIP	1K	5%	1/10W
R1466	1-216-821-11	METAL CHIP	1K	5%	1/10W
R1468	1-216-832-11	METAL CHIP	8.2K	5%	1/10W
R1474	1-216-833-11	METAL CHIP	10K	5%	1/10W
R1476	1-216-821-11	METAL CHIP	1K	5%	1/10W
R1486	1-216-821-11	METAL CHIP	1K	5%	1/10W
R1503	1-216-864-11	SHORT CHIP	0		
R1524	1-216-864-11	SHORT CHIP	0		
R1530	1-216-845-11	METAL CHIP	100K	5%	1/10W
R1556	1-216-864-11	SHORT CHIP	0		
R1635	1-216-833-11	METAL CHIP	10K	5%	1/10W
R1636	1-216-833-11	METAL CHIP	10K	5%	1/10W
R1815	1-216-833-11	METAL CHIP	10K	5%	1/10W
R1818	1-216-833-11	METAL CHIP	10K	5%	1/10W
R1901	1-216-833-11	METAL CHIP	10K	5%	1/10W
R1919	1-216-845-11	METAL CHIP	100K	5%	1/10W
R1922	1-216-864-11	SHORT CHIP	0		
R1929	1-216-845-11	METAL CHIP	100K	5%	1/10W
R1946	1-216-825-11	METAL CHIP	2.2K	5%	1/10W
R1947	1-216-801-11	METAL CHIP	22	5%	1/10W
R1948	1-216-809-11	METAL CHIP	100	5%	1/10W
R1949	1-216-841-11	METAL CHIP	47K	5%	1/10W
R2101	1-216-821-11	METAL CHIP	1K	5%	1/10W
R2102	1-216-833-11	METAL CHIP	10K	5%	1/10W
R2104	1-216-833-11	METAL CHIP	10K	5%	1/10W
R2105	1-216-833-11	METAL CHIP	10K	5%	1/10W
R2106	1-216-833-11	METAL CHIP	10K	5%	1/10W
R2107	1-216-833-11	METAL CHIP	10K	5%	1/10W
R2108	1-216-857-11	METAL CHIP	1M	5%	1/10W

Ref. No.	Part No.	Description			Remark
R2109	1-216-821-11	METAL CHIP	1K	5%	1/10W
R2110	1-216-809-11	METAL CHIP	100	5%	1/10W
R2111	1-216-816-11	METAL CHIP	390	5%	1/10W
R2112	1-216-816-11	METAL CHIP	390	5%	1/10W
R2113	1-216-635-11	METAL CHIP	220	0.5%	1/10W
R2114	1-216-816-11	METAL CHIP	390	5%	1/10W
R2115	1-216-833-11	METAL CHIP	10K	5%	1/10W
R2116	1-216-821-11	METAL CHIP	1K	5%	1/10W
R2117	1-216-857-11	METAL CHIP	1M	5%	1/10W
R2118	1-216-809-11	METAL CHIP	100	5%	1/10W
R2119	1-216-833-11	METAL CHIP	10K	5%	1/10W
R2120	1-216-801-11	METAL CHIP	22	5%	1/10W
R2121	1-216-801-11	METAL CHIP	22	5%	1/10W
R2122	1-216-809-11	METAL CHIP	100	5%	1/10W
R2123	1-216-809-11	METAL CHIP	100	5%	1/10W
R2124	1-216-809-11	METAL CHIP	100	5%	1/10W
R2218	1-216-833-11	METAL CHIP	10K	5%	1/10W
RB1001	1-234-372-11	RES, NETWORK	100 (1005X4)		
RB1002	1-234-372-11	RES, NETWORK	100 (1005X4)		
RB1003	1-234-372-11	RES, NETWORK	100 (1005X4)		
RB1004	1-234-372-11	RES, NETWORK	100 (1005X4)		
RB1005	1-234-378-21	RES, NETWORK	10K (1005X4)		
		< VIBRATOR >			
X1101	1-813-448-21	PIEZOELECTRIC OSCILLATOR (24 MHz)			
X1302	1-814-271-11	QUARTS CRYSTAL UNIT (25 MHz)			
X2001	1-795-126-21	VIBRATOR, CRYSTAL (12.288 MHz)			

****

	A-1641-554-A	DISPLAY BOARD, COMPLETE			
		**********			
		< CAPACITOR >			
C103	1-126-795-11	ELECT	10uF	20%	50V
C104	1-162-966-11	CERAMIC CHIP	0.0022uF	10%	50V
C105	1-162-966-11	CERAMIC CHIP	0.0022uF	10%	50V
C106	1-162-966-11	CERAMIC CHIP	0.0022uF	10%	50V
C107	1-162-966-11	CERAMIC CHIP	0.0022uF	10%	50V
C108	1-100-566-91	CERAMIC CHIP	0.1uF	10%	25V
C109	1-100-566-91	CERAMIC CHIP	0.1uF	10%	25V
C114	1-127-715-11	CERAMIC CHIP	0.22uF	10%	16V
C121	1-162-960-11	CERAMIC CHIP	220PF	10%	50V
C122	1-162-960-11	CERAMIC CHIP	220PF	10%	50V
C123	1-162-960-11	CERAMIC CHIP	220PF	10%	50V
C124	1-162-960-11	CERAMIC CHIP	220PF	10%	50V
C125	1-162-960-11	CERAMIC CHIP	220PF	10%	50V
C126	1-162-960-11	CERAMIC CHIP	220PF	10%	50V
C127	1-162-960-11	CERAMIC CHIP	220PF	10%	50V
C128	1-162-960-11	CERAMIC CHIP	220PF	10%	50V
C129	1-162-960-11	CERAMIC CHIP	220PF	10%	50V
C130	1-162-960-11	CERAMIC CHIP	220PF	10%	50V
C131	1-162-960-11	CERAMIC CHIP	220PF	10%	50V
C132	1-163-243-11	CERAMIC CHIP	47PF	5%	50V
C150	1-100-566-91	CERAMIC CHIP	0.1uF	10%	25V
C151	1-163-037-11	CERAMIC CHIP	0.022uF	10%	50V
C154	1-162-968-11	CERAMIC CHIP	0.0047uF	10%	50V
C155	1-162-974-11	CERAMIC CHIP	0.01uF		50V
C156	1-107-826-11	CERAMIC CHIP	0.1uF	10%	16V
C157	1-119-943-91	ELECT	47uF	20%	50V
C158	1-165-722-11	ELECT	100uF	20%	10V
C197	1-162-927-11	CERAMIC CHIP	100PF	5%	50V
C198	1-162-927-11	CERAMIC CHIP	100PF	5%	50V
C199	1-162-927-11	CERAMIC CHIP	100PF	5%	50V
C200	1-162-966-11	CERAMIC CHIP	0.0022uF	10%	50V
C201	1-162-970-11	CERAMIC CHIP	0.01uF	10%	25V
C202	1-126-796-11	ELECT	22uF	20%	50V
C203	1-126-796-11	ELECT	22uF	20%	50V
C204	1-137-980-91	CERAMIC CHIP	0.47uF	10%	50V
C206	1-100-566-91	CERAMIC CHIP	0.1uF	10%	25V
		< CONNECTOR >			
* CNP101	1-564-518-11	PLUG, CONNECTOR 3P			
CNP102	1-564-517-11	PLUG, CONNECTOR 2P			
CNS104	1-779-289-11	CONNECTOR, FFC (LIF (NON-ZIF)) 21P			
		< DIODE >			
D100	6-501-738-01	DIODE	MAZ8062GMLS0		
D101	6-501-817-01	DIODE	MA2J1110GLS0		
D102	6-501-817-01	DIODE	MA2J1110GLS0		
D103	6-501-817-01	DIODE	MA2J1110GLS0		
D104	6-501-817-01	DIODE	MA2J1110GLS0		
D105	8-719-075-59	DIODE	SELS5B23C-TP15		
D106	8-719-075-59	DIODE	SELS5B23C-TP15		
		< VACUM FLUORESCENT DISPLAY >			
FL101	1-483-066-11	FLUORESCENT INDICATOR			
		< IC >			
IC101	6-600-349-31	IC	NJL24H400A		
IC102	6-713-577-01	IC	ML9208-03GAZ03B		
IC103	6-705-468-01	IC	BA33BC0FP-E2		
		< COIL >			
L104	1-410-671-31	INDUCTOR	47UH		
		< TRANSISTOR >			
Q101	6-550-065-01	TRANSISTOR	CPH5504-TL-E		
Q110	8-729-620-07	TRANSISTOR	2SC3052EF-T1-LEF		
Q111	8-729-620-07	TRANSISTOR	2SC3052EF-T1-LEF		
		< RESISTOR >			
R101	1-216-813-11	METAL CHIP	220	5%	1/10W
R102	1-216-815-11	METAL CHIP	330	5%	1/10W
R108	1-216-813-11	METAL CHIP	220	5%	1/10W
R109	1-216-815-11	METAL CHIP	330	5%	1/10W
R119	1-216-809-11	METAL CHIP	100	5%	1/10W
⚠ R120	1-249-393-11	CARBON	10	5%	1/4W
R121	1-211-990-11	METAL CHIP	75	0.5%	1/10W
R122	1-216-864-11	SHORT CHIP	0		
R123	1-216-825-11	METAL CHIP	2.2K	5%	1/10W
R124	1-211-990-11	METAL CHIP	75	0.5%	1/10W
R126	1-216-825-11	METAL CHIP	2.2K	5%	1/10W
⚠ R198	1-249-381-11	CARBON	1	5%	1/4W
⚠ R199	1-249-381-11	CARBON	1	5%	1/4W
R200	1-216-828-11	METAL CHIP	3.9K	5%	1/10W
R201	1-216-839-11	METAL CHIP	33K	5%	1/10W
R202	1-216-809-11	METAL CHIP	100	5%	1/10W
R205	1-216-827-11	METAL CHIP	3.3K	5%	1/10W
R208	1-216-809-11	METAL CHIP	100	5%	1/10W
R209	1-216-809-11	METAL CHIP	100	5%	1/10W

Ref. No.	Part No.	Description			Remark
R210	1-216-809-11	METAL CHIP	100	5%	1/10W
R211	1-216-809-11	METAL CHIP	100	5%	1/10W
R212	1-216-864-11	SHORT CHIP	0		
		< ROTARY ENCODER >			
RV101	1-418-725-41	ENCODER, ROTARY (INPUT SELECTOR)			
RV102	1-418-725-41	ENCODER, ROTARY (12 TYPE)			(MASTER VOLUME)
		< SWITCH >			
S101	1-771-410-21	TACTILE SWITCH (NIGHT MODE)			
S102	1-771-410-21	TACTILE SWITCH (A.F.D)			
S103	1-771-410-21	TACTILE SWITCH (MOVIE)			
S107	1-771-410-21	TACTILE SWITCH (MUSIC)			
S108	1-771-410-21	TACTILE SWITCH (GAME)			
S109	1-771-410-21	TACTILE SWITCH (MULTI STEREO)			
		< TRANSFORMER >			
⚠ T101	1-445-231-11	TRANSFORMER, DC-DC CONVERTER			

****

	A-1519-237-A	HDMI SW BOARD, COMPLETE			
		**********			
		< CAPACITOR >			
C5001	1-107-826-11	CERAMIC CHIP	0.1uF	10%	16V
C5002	1-162-970-11	CERAMIC CHIP	0.01uF	10%	25V
C5003	1-162-970-11	CERAMIC CHIP	0.01uF	10%	25V
C5004	1-162-970-11	CERAMIC CHIP	0.01uF	10%	25V
C5005	1-162-970-11	CERAMIC CHIP	0.01uF	10%	25V
C5006	1-162-970-11	CERAMIC CHIP	0.01uF	10%	25V
C5007	1-162-970-11	CERAMIC CHIP	0.01uF	10%	25V
C5008	1-162-970-11	CERAMIC CHIP	0.01uF	10%	25V
C5009	1-162-970-11	CERAMIC CHIP	0.01uF	10%	25V
C5010	1-162-970-11	CERAMIC CHIP	0.01uF	10%	25V
C5011	1-162-970-11	CERAMIC CHIP	0.01uF	10%	25V
C5012	1-112-788-11	ELECT CHIP	330uF	20%	6.3V
C5013	1-128-934-11	CERAMIC CHIP	0.33uF	20%	10V
C5014	1-112-788-11	ELECT CHIP	330uF	20%	6.3V
C5015	1-128-994-21	ELECT CHIP	47uF	20%	10V
C5016	1-162-970-11	CERAMIC CHIP	0.01uF	10%	25V
C5017	1-115-467-11	CERAMIC CHIP	0.22uF	10%	10V
C5018	1-115-467-11	CERAMIC CHIP	0.22uF	10%	10V
C5019	1-107-826-11	CERAMIC CHIP	0.1uF	10%	16V
C5020	1-107-826-11	CERAMIC CHIP	0.1uF	10%	16V
C5021	1-117-681-11	ELECT CHIP	100uF	20%	16V
C5022	1-162-970-11	CERAMIC CHIP	0.01uF	10%	25V
C5023	1-162-970-11	CERAMIC CHIP	0.01uF	10%	25V
C5024	1-128-934-11	CERAMIC CHIP	0.33uF	20%	10V
C5027	1-128-994-21	ELECT CHIP	47uF	20%	10V
		< CONNECTOR >			
CN5001	1-820-735-11	HDMI CONNECTOR (HDMI DVD IN)			
CN5002	1-820-735-11	HDMI CONNECTOR (HDMI BD IN)			
CN5003	1-820-735-11	HDMI CONNECTOR (HDMI OUT)			
CN5004	1-784-368-51	CONNECTOR, FFC/FPC 9P			
		< IC >			
IC5001	6-709-221-01	IC TMDS341PFCR			
IC5002	6-705-337-01	IC TK11150CSCL-G			
IC5003	6-705-468-01	IC BA33BC0FP-E2			
IC5004	6-704-099-01	IC TC7WZ08FK (TE85R)			
IC5005	6-707-207-01	IC SN74LVC1G3157DCKR			
IC5006	6-706-740-01	IC BA00BC0WFP-E2			
		< FERRITE BEAD >			
L5013	1-400-862-11	BEAD, FERRITE			
		< RESISTOR >			
R5001	1-218-861-11	METAL CHIP	3.9K	0.5%	1/10W
R5002	1-218-844-11	METAL CHIP	750	0.5%	1/10W
R5003	1-216-833-11	METAL CHIP	10K	5%	1/10W
R5004	1-216-864-11	SHORT CHIP	0		
R5005	1-216-864-11	SHORT CHIP	0		
R5006	1-216-864-11	SHORT CHIP	0		
R5007	1-216-864-11	SHORT CHIP	0		
R5008	1-216-864-11	SHORT CHIP	0		
R5009	1-216-864-11	SHORT CHIP	0		
R5010	1-216-864-11	SHORT CHIP	0		
R5011	1-216-864-11	SHORT CHIP	0		
R5014	1-216-864-11	SHORT CHIP	0		
R5015	1-216-821-11	METAL CHIP	1K	5%	1/10W
R5016	1-216-864-11	SHORT CHIP	0		
R5017	1-216-864-11	SHORT CHIP	0		
R5018	1-216-821-11	METAL CHIP	1K	5%	1/10W
R5019	1-216-864-11	SHORT CHIP	0		
R5020	1-216-864-11	SHORT CHIP	0		
R5022	1-216-833-11	METAL CHIP	10K	5%	1/10W
R5024	1-216-864-11	SHORT CHIP	0		
R5025	1-216-864-11	SHORT CHIP	0		
R5026	1-216-809-11	METAL CHIP	100	5%	1/10W
R5027	1-216-833-11	METAL CHIP	10K	5%	1/10W
R5028	1-216-833-11	METAL CHIP	10K	5%	1/10W
R5029	1-216-841-11	METAL CHIP	47K	5%	1/10W
R5030	1-216-833-11	METAL CHIP	10K	5%	1/10W
R5042	1-216-829-11	METAL CHIP	4.7K	5%	1/10W
R5043	1-216-829-11	METAL CHIP	4.7K	5%	1/10W
R5047	1-216-864-11	SHORT CHIP	0		
R5048	1-216-864-11	SHORT CHIP	0		
R5049	1-216-864-11	SHORT CHIP	0		
R5050	1-216-821-11	METAL CHIP	1K	5%	1/10W
R5051	1-216-823-11	METAL CHIP	1.5K	5%	1/10W
R5052	1-216-841-11	METAL CHIP	47K	5%	1/10W
R5053	1-216-825-11	METAL CHIP	2.2K	5%	1/10W
R5054	1-216-833-11	METAL CHIP	10K	5%	1/10W
R5055	1-216-833-11	METAL CHIP	10K	5%	1/10W
R5056	1-216-821-11	METAL CHIP	1K	5%	1/10W
R5060	1-216-864-11	SHORT CHIP	0		
R5061	1-216-864-11	SHORT CHIP	0		
R5068	1-216-845-11	METAL CHIP	100K	5%	1/10W
R5069	1-216-845-11	METAL CHIP	100K	5%	1/10W
R5072	1-216-809-11	METAL CHIP	100	5%	1/10W
R5073	1-216-864-11	SHORT CHIP	0		
R5074	1-216-825-11	METAL CHIP	2.2K	5%	1/10W

****

Ref. No.	Part No.	Description			Remark
		HEADPHONE BOARD			
		**********			
		< CAPACITOR >			
C791	1-100-566-91	CERAMIC CHIP	0.1uF	10%	25V
		< CONNECTOR >			
* CNP790	1-564-507-11	PLUG, CONNECTOR 4P			
		< JACK >			
J790	1-817-629-11	JACK (LARGE TYPE) (PHONES)			
		< LEAD >			
* TP790	1-690-880-31	LEAD (WITH CONNECTOR)			
**********					
	A-1660-430-A	MAIN BOARD, COMPLETE (EXCEPT E51, EA)			
	A-1707-435-A	MAIN BOARD, COMPLETE (E51, EA)			
		**********			
	7-685-646-79	SCREW +BVTP 3X8 TYPE2 IT-3			
	7-685-646-79	SCREW +BVTP 3X8 TYPE2 IT-3			
		< CAPACITOR >			
C320	1-126-923-91	ELECT	220uF	20%	10V
C323	1-126-923-91	ELECT	220uF	20%	10V
C325	1-126-964-11	ELECT	10uF	20%	50V
C335	1-126-934-11	ELECT	220uF	20%	16V
C350	1-137-980-91	CERAMIC CHIP	0.47uF	10%	50V
C351	1-126-933-11	ELECT	100uF	20%	16V
C352	1-137-980-91	CERAMIC CHIP	0.47uF	10%	50V
C353	1-126-933-11	ELECT	100uF	20%	16V
C400	1-162-966-11	CERAMIC CHIP	0.0022uF	10%	50V
C403	1-162-966-11	CERAMIC CHIP	0.0022uF	10%	50V
C405	1-162-966-11	CERAMIC CHIP	0.0022uF	10%	50V
C408	1-126-963-11	ELECT	4.7uF	20%	50V
C409	1-126-963-11	ELECT	4.7uF	20%	50V
C430	1-162-960-11	CERAMIC CHIP	220PF	10%	50V
C431	1-162-960-11	CERAMIC CHIP	220PF	10%	50V
C449	1-162-927-11	CERAMIC CHIP	100PF	5%	50V
C450	1-162-927-11	CERAMIC CHIP	100PF	5%	50V
C458	1-126-963-11	ELECT	4.7uF	20%	50V
C459	1-126-963-11	ELECT	4.7uF	20%	50V
C471	1-126-964-11	ELECT	10uF	20%	50V
C489	1-164-156-11	CERAMIC CHIP	0.1uF		25V
C499	1-164-156-11	CERAMIC CHIP	0.1uF		25V
C523	1-165-908-11	CERAMIC CHIP	1uF	10%	10V
C524	1-126-963-11	ELECT	4.7uF	20%	50V
C525	1-164-227-11	CERAMIC CHIP	0.022uF	10%	25V
C526	1-164-227-11	CERAMIC CHIP	0.022uF	10%	25V
C527	1-165-908-11	CERAMIC CHIP	1uF	10%	10V
C532	1-165-908-11	CERAMIC CHIP	1uF	10%	10V
C534	1-126-963-11	ELECT	4.7uF	20%	50V
C537	1-165-908-11	CERAMIC CHIP	1uF	10%	10V
C546	1-126-960-11	ELECT	1uF	20%	50V
C547	1-126-960-11	ELECT	1uF	20%	50V
C548	1-100-152-91	CERAMIC CHIP	100PF	5%	100V
C549	1-100-152-91	CERAMIC CHIP	100PF	5%	100V
C550	1-100-152-91	CERAMIC CHIP	100PF	5%	100V
C551	1-100-152-91	CERAMIC CHIP	100PF	5%	100V

Ref. No.	Part No.	Description			Remark
C602	1-162-927-11	CERAMIC CHIP	100PF	5%	50V
C603	1-101-810-00	CERAMIC	100PF	5%	500V
C604	1-162-927-11	CERAMIC CHIP	100PF	5%	50V
C605	1-107-583-11	CERAMIC	3PF	0.25PF	500V
C607	1-126-947-11	ELECT	47uF	20%	35V
C608	1-114-989-81	CERAMIC	47PF	5%	1KV
C609	1-114-989-81	CERAMIC	47PF	5%	1KV
C610	1-126-964-11	ELECT	10uF	20%	50V
C611	1-162-960-11	CERAMIC CHIP	220PF	10%	50V
C612	1-126-923-91	ELECT	220uF	20%	10V
C629	1-136-157-00	FILM	0.022uF	5%	50V
C652	1-162-927-11	CERAMIC CHIP	100PF	5%	50V
C653	1-101-810-00	CERAMIC	100PF	5%	500V
C654	1-162-927-11	CERAMIC CHIP	100PF	5%	50V
C655	1-107-583-11	CERAMIC	3PF	0.25PF	500V
C657	1-126-947-11	ELECT	47uF	20%	35V
C658	1-114-989-81	CERAMIC	47PF	5%	1KV
C659	1-114-989-81	CERAMIC	47PF	5%	1KV
C660	1-126-964-11	ELECT	10uF	20%	50V
C661	1-162-960-11	CERAMIC CHIP	220PF	10%	50V
C662	1-126-923-91	ELECT	220uF	20%	10V
C679	1-136-157-00	FILM	0.022uF	5%	50V
C702	1-162-927-11	CERAMIC CHIP	100PF	5%	50V
C703	1-101-810-00	CERAMIC	100PF	5%	500V
C704	1-162-927-11	CERAMIC CHIP	100PF	5%	50V
C705	1-107-583-11	CERAMIC	3PF	0.25PF	500V
C707	1-126-947-11	ELECT	47uF	20%	35V
C708	1-114-989-81	CERAMIC	47PF	5%	1KV
C709	1-114-989-81	CERAMIC	47PF	5%	1KV
C710	1-126-964-11	ELECT	10uF	20%	50V
C711	1-162-960-11	CERAMIC CHIP	220PF	10%	50V
C712	1-126-923-91	ELECT	220uF	20%	10V
C725	1-100-566-91	CERAMIC CHIP	0.1uF	10%	25V
C729	1-136-157-00	FILM	0.022uF	5%	50V
C752	1-162-927-11	CERAMIC CHIP	100PF	5%	50V
C753	1-101-810-00	CERAMIC	100PF	5%	500V
C754	1-162-927-11	CERAMIC CHIP	100PF	5%	50V
C755	1-107-583-11	CERAMIC	3PF	0.25PF	500V
C757	1-126-947-11	ELECT	47uF	20%	35V
C758	1-114-989-81	CERAMIC	47PF	5%	1KV
C759	1-114-989-81	CERAMIC	47PF	5%	1KV
C760	1-126-964-11	ELECT	10uF	20%	50V
C761	1-162-960-11	CERAMIC CHIP	220PF	10%	50V
C762	1-126-923-91	ELECT	220uF	20%	10V
C775	1-100-566-91	CERAMIC CHIP	0.1uF	10%	25V
C779	1-136-157-00	FILM	0.022uF	5%	50V
C802	1-162-927-11	CERAMIC CHIP	100PF	5%	50V
C803	1-101-810-00	CERAMIC	100PF	5%	500V
C804	1-162-927-11	CERAMIC CHIP	100PF	5%	50V
C805	1-107-583-11	CERAMIC	3PF	0.25PF	500V
C807	1-126-947-11	ELECT	47uF	20%	35V
C808	1-162-815-11	CERAMIC	47PF	5%	500V
C809	1-162-815-11	CERAMIC	47PF	5%	500V
C810	1-126-964-11	ELECT	10uF	20%	50V
C811	1-162-960-11	CERAMIC CHIP	220PF	10%	50V
C812	1-126-923-91	ELECT	220uF	20%	10V
C829	1-136-157-00	FILM	0.022uF	5%	50V
C852	1-162-927-11	CERAMIC CHIP	100PF	5%	50V
C853	1-101-810-00	CERAMIC	100PF	5%	500V
C854	1-162-927-11	CERAMIC CHIP	100PF	5%	50V

Ref. No.	Part No.	Description			Remark
C855	1-107-583-11	CERAMIC	3PF	0.25PF	500V
C857	1-126-947-11	ELECT	47uF	20%	35V
C858	1-114-989-81	CERAMIC	47PF	5%	1KV
C859	1-114-989-81	CERAMIC	47PF	5%	1KV
C860	1-126-964-11	ELECT	10uF	20%	50V
C861	1-162-960-11	CERAMIC CHIP	220PF	10%	50V
C862	1-126-923-91	ELECT	220uF	20%	10V
C875	1-162-970-11	CERAMIC CHIP	0.01uF	10%	25V
C879	1-136-157-00	FILM	0.022uF	5%	50V
C910	1-104-329-11	CERAMIC CHIP	0.1uF	10%	50V
C911	1-104-329-11	CERAMIC CHIP	0.1uF	10%	50V
C912	1-126-943-11	ELECT	2200uF	20%	25V
C913	1-126-942-61	ELECT	1000uF	20%	25V
C920	1-135-851-21	MYLAR	0.22uF		100V
C921	1-135-851-21	MYLAR	0.22uF		100V
C924	1-165-946-11	ELECT (BLOCK)	6800uF	20%	71V
C925	1-165-946-11	ELECT (BLOCK)	6800uF	20%	71V
CC01	1-162-927-11	CERAMIC CHIP	100PF	5%	50V
					(AR, MY, SP, SAF, TH)
CC02	1-162-927-11	CERAMIC CHIP	100PF	5%	50V
					(AR, MY, SP, SAF, TH)
CC03	1-162-927-11	CERAMIC CHIP	100PF	5%	50V
					(AR, MY, SP, SAF, TH)
CC04	1-162-927-11	CERAMIC CHIP	100PF	5%	50V
					(AR, MY, SP, SAF, TH)
CC05	1-162-927-11	CERAMIC CHIP	100PF	5%	50V
					(AR, MY, SP, SAF, TH)
CC08	1-162-927-11	CERAMIC CHIP	100PF	5%	50V
					(AR, MY, SP, SAF, TH)
CC09	1-162-927-11	CERAMIC CHIP	100PF	5%	50V
					(AR, MY, SP, SAF, TH)
CC11	1-162-970-11	CERAMIC CHIP	0.01uF	10%	25V
					(AR, MY, SP, SAF, TH)
CC12	1-162-970-11	CERAMIC CHIP	0.01uF	10%	25V
					(AR, MY, SP, SAF, TH)
CC13	1-162-970-11	CERAMIC CHIP	0.01uF	10%	25V
					(AR, MY, SP, SAF, TH)
CC14	1-162-970-11	CERAMIC CHIP	0.01uF	10%	25V
					(AR, MY, SP, SAF, TH)
CC15	1-162-970-11	CERAMIC CHIP	0.01uF	10%	25V
					(AR, MY, SP, SAF, TH)
CC17	1-162-970-11	CERAMIC CHIP	0.01uF	10%	25V
					(AR, MY, SP, SAF, TH)
CC51	1-162-927-11	CERAMIC CHIP	100PF	5%	50V
					(AR, MY, SP, SAF, TH)
CC52	1-162-927-11	CERAMIC CHIP	100PF	5%	50V
					(AR, MY, SP, SAF, TH)
CC53	1-162-927-11	CERAMIC CHIP	100PF	5%	50V
					(AR, MY, SP, SAF, TH)
CC54	1-162-927-11	CERAMIC CHIP	100PF	5%	50V
					(AR, MY, SP, SAF, TH)
CC55	1-162-927-11	CERAMIC CHIP	100PF	5%	50V
					(AR, MY, SP, SAF, TH)
CC58	1-162-927-11	CERAMIC CHIP	100PF	5%	50V
					(AR, MY, SP, SAF, TH)
CC59	1-162-927-11	CERAMIC CHIP	100PF	5%	50V
					(AR, MY, SP, SAF, TH)
		< CONNECTOR >			
CNP410	1-770-827-21	CONNECTOR, BOARD TO BOARD 16P			
CNP411	1-573-847-11	BOARD TO BOARD CONNECTOR (PLUG) 15P			
* CNP432	1-564-509-11	PLUG, CONNECTOR 6P			
CNP500	1-778-226-21	CONNECTOR, BOARD TO BOARD 6P			
* CNP510	1-564-508-11	PLUG, CONNECTOR 5P			

Ref. No.	Part No.	Description	Remark
* CNP910	1-564-507-11	PLUG, CONNECTOR 4P	
CNP920	1-564-242-00	PIN, CONNECTOR (3.96mm PITCH) 5P	
		< DIODE >	
D301	6-501-817-01	DIODE MA2J1110GLS0	
D326	6-500-335-01	DIODE MC2838-T112-1	
D327	6-500-335-01	DIODE MC2838-T112-1	
D335	6-501-712-01	DIODE MAZ8030G0LS0	
D350	6-501-817-01	DIODE MA2J1110GLS0	
D352	8-719-053-18	DIODE 1SR154-400TE-25	
D355	6-501-817-01	DIODE MA2J1110GLS0	
D360	6-501-817-01	DIODE MA2J1110GLS0	
D375	6-501-817-01	DIODE MA2J1110GLS0	
D611	6-501-817-01	DIODE MA2J1110GLS0	
D661	6-501-817-01	DIODE MA2J1110GLS0	
D711	6-501-817-01	DIODE MA2J1110GLS0	
D725	6-501-817-01	DIODE MA2J1110GLS0	
D761	6-501-817-01	DIODE MA2J1110GLS0	
D775	6-501-817-01	DIODE MA2J1110GLS0	
D811	6-501-817-01	DIODE MA2J1110GLS0	
D861	6-501-817-01	DIODE MA2J1110GLS0	
D875	6-501-817-01	DIODE MA2J1110GLS0	
D910	8-719-053-18	DIODE 1SR154-400TE-25	
D911	8-719-053-18	DIODE 1SR154-400TE-25	
D912	8-719-053-18	DIODE 1SR154-400TE-25	
D913	8-719-053-18	DIODE 1SR154-400TE-25	
D920	6-501-817-01	DIODE MA2J1110GLS0	
D921	8-719-073-32	DIODE D25XB60	
		< IC >	
IC350	6-712-294-01	IC KIA7807API-U/PF	
IC352	6-712-295-01	IC KIA7907PI	
IC400	6-711-760-01	IC BD3471KS2	
IC501	8-759-710-97	IC NJM4565M-D	
IC601	6-710-828-01	IC STK350-530T-E	
IC701	6-710-828-01	IC STK350-530T-E	
IC801	6-710-828-01	IC STK350-530T-E	
		< JACK >	
J401	1-774-411-11	PIN JACK 6P (SA-CD/CD-R OUT, SA-CD/CD-R IN, TV IN)	
J403	1-794-981-11	JACK, PIN 4P (SAT AUDIO IN, DVD AUDIO IN)	
J404	1-794-981-11	JACK, PIN 4P (VIDEO 1 AUDIO OUT, VIDEO 1 AUDIO IN)	
J405	1-774-785-11	PIN JACK 1P (AUDIO OUT SUB WOOFER)	
		< JUMPER RESISTOR >	
JR408	1-216-864-11	SHORT CHIP 0	
		< COIL >	
L628	1-420-872-52	COIL, AIR-CORE	
L678	1-420-872-52	COIL, AIR-CORE	
L728	1-420-872-52	COIL, AIR-CORE	
L778	1-420-872-52	COIL, AIR-CORE	
L828	1-420-872-52	COIL, AIR-CORE	
L878	1-420-872-52	COIL, AIR-CORE	
		< TRANSISTOR >	
Q301	8-729-620-07	TRANSISTOR 2SC3052EF-T1-LEF	
Q320	8-729-216-31	TRANSISTOR 2SA1163L-TE85L	

Ref. No.	Part No.	Description			Remark
Q321	8-729-620-07	TRANSISTOR	2SC3052EF-T1-LEF		
Q323	8-729-216-31	TRANSISTOR	2SA1163L-TE85L		
Q324	8-729-620-07	TRANSISTOR	2SC3052EF-T1-LEF		
Q325	8-729-271-31	TRANSISTOR	2SC2713-G		
Q350	8-729-620-07	TRANSISTOR	2SC3052EF-T1-LEF		
Q355	8-729-620-07	TRANSISTOR	2SC3052EF-T1-LEF		
Q360	8-729-620-07	TRANSISTOR	2SC3052EF-T1-LEF		
Q375	8-729-620-07	TRANSISTOR	2SC3052EF-T1-LEF		
Q601	8-729-119-76	TRANSISTOR	2SA1175-HFE		
Q602	8-729-922-39	TRANSISTOR	2SD2144S-V		
Q611	8-729-216-31	TRANSISTOR	2SA1163-G		
Q612	8-729-216-31	TRANSISTOR	2SA1163-G		
Q651	8-729-119-76	TRANSISTOR	2SA1175-HFE		
Q652	8-729-922-39	TRANSISTOR	2SD2144S-V		
Q661	8-729-216-31	TRANSISTOR	2SA1163-G		
Q662	8-729-216-31	TRANSISTOR	2SA1163-G		
Q701	8-729-119-76	TRANSISTOR	2SA1175-HFE		
Q702	8-729-922-39	TRANSISTOR	2SD2144S-V		
Q711	8-729-216-31	TRANSISTOR	2SA1163-G		
Q712	8-729-216-31	TRANSISTOR	2SA1163-G		
Q751	8-729-119-76	TRANSISTOR	2SA1175-HFE		
Q752	8-729-922-39	TRANSISTOR	2SD2144S-V		
Q761	8-729-216-31	TRANSISTOR	2SA1163-G		
Q762	8-729-216-31	TRANSISTOR	2SA1163-G		
Q801	8-729-119-76	TRANSISTOR	2SA1115TP-EF		
Q802	8-729-922-39	TRANSISTOR	2SD2144S-V		
Q811	8-729-216-31	TRANSISTOR	2SA1163-G		
Q812	8-729-216-31	TRANSISTOR	2SA1163-G		
Q851	8-729-119-76	TRANSISTOR	2SA1115TP-EF		
Q852	8-729-922-39	TRANSISTOR	2SD2144S-V		
Q861	8-729-216-31	TRANSISTOR	2SA1163-G		
Q862	8-729-216-31	TRANSISTOR	2SA1163-G		
Q920	8-729-620-07	TRANSISTOR	2SC3052EF-T1-LEF		
		< RESISTOR >			
R301	1-216-825-11	METAL CHIP	2.2K	5%	1/10W
⚠ R302	1-249-399-11	CARBON	33	5%	1/4W
⚠ R303	1-249-397-11	CARBON	22	5%	1/4W
R304	1-216-841-11	METAL CHIP	47K	5%	1/10W
R320	1-216-845-11	METAL CHIP	100K	5%	1/10W
R323	1-216-845-11	METAL CHIP	100K	5%	1/10W
R325	1-218-867-11	METAL CHIP	6.8K	0.5%	1/10W
R326	1-216-840-11	METAL CHIP	39K	5%	1/10W
R327	1-216-833-11	METAL CHIP	10K	5%	1/10W
R328	1-216-821-11	METAL CHIP	1K	5%	1/10W
R335	1-218-867-11	METAL CHIP	6.8K	0.5%	1/10W
R337	1-216-837-11	METAL CHIP	22K	5%	1/10W
R350	1-216-825-11	METAL CHIP	2.2K	5%	1/10W
⚠ R351	1-249-397-11	CARBON	22	5%	1/4W
⚠ R352	1-249-397-11	CARBON	22	5%	1/4W
R353	1-216-841-11	METAL CHIP	47K	5%	1/10W
R355	1-216-821-11	METAL CHIP	1K	5%	1/10W
⚠ R356	1-249-397-11	CARBON	22	5%	1/4W
⚠ R357	1-249-397-11	CARBON	22	5%	1/4W
R358	1-216-841-11	METAL CHIP	47K	5%	1/10W
R360	1-216-821-11	METAL CHIP	1K	5%	1/10W
⚠ R361	1-249-397-11	CARBON	22	5%	1/4W
⚠ R362	1-249-397-11	CARBON	22	5%	1/4W
R363	1-216-841-11	METAL CHIP	47K	5%	1/10W
R375	1-216-825-11	METAL CHIP	2.2K	5%	1/10W

Ref. No.	Part No.	Description			Remark
⚠ R376	1-249-397-11	CARBON	22	5%	1/4W
⚠ R377	1-249-397-11	CARBON	22	5%	1/4W
R378	1-216-841-11	METAL CHIP	47K	5%	1/10W
⚠ R392	1-215-891-11	METAL OXIDE	680	5%	2W
⚠ R393	1-215-891-11	METAL OXIDE	680	5%	2W
R401	1-216-821-11	METAL CHIP	1K	5%	1/10W
R402	1-216-821-11	METAL CHIP	1K	5%	1/10W
R403	1-216-821-11	METAL CHIP	1K	5%	1/10W
R404	1-216-821-11	METAL CHIP	1K	5%	1/10W
R405	1-216-821-11	METAL CHIP	1K	5%	1/10W
R408	1-216-821-11	METAL CHIP	1K	5%	1/10W
R409	1-216-821-11	METAL CHIP	1K	5%	1/10W
R430	1-216-821-11	METAL CHIP	1K	5%	1/10W
R431	1-216-821-11	METAL CHIP	1K	5%	1/10W
R449	1-216-821-11	METAL CHIP	1K	5%	1/10W
R450	1-216-821-11	METAL CHIP	1K	5%	1/10W
R451	1-216-821-11	METAL CHIP	1K	5%	1/10W
R452	1-216-821-11	METAL CHIP	1K	5%	1/10W
R453	1-216-821-11	METAL CHIP	1K	5%	1/10W
R454	1-216-821-11	METAL CHIP	1K	5%	1/10W
R455	1-216-821-11	METAL CHIP	1K	5%	1/10W
R458	1-216-821-11	METAL CHIP	1K	5%	1/10W
R459	1-216-821-11	METAL CHIP	1K	5%	1/10W
R466	1-216-821-11	METAL CHIP	1K	5%	1/10W
R467	1-216-845-11	METAL CHIP	100K	5%	1/10W
R470	1-216-841-11	METAL CHIP	47K	5%	1/10W
R540	1-216-841-11	METAL CHIP	47K	5%	1/10W
R541	1-218-879-11	METAL CHIP	22K	0.5%	1/10W
R542	1-218-879-11	METAL CHIP	22K	0.5%	/10W
R543	1-216-841-11	METAL CHIP	47K	5%	1/10W
⚠ R545	1-249-377-11	CARBON	0.47	5%	1/4W
⚠ R546	1-249-377-11	CARBON	0.47	5%	1/4W
R550	1-216-841-11	METAL CHIP	47K	5%	1/10W
R551	1-218-879-11	METAL CHIP	22K	0.5%	1/10W
R552	1-218-879-11	METAL CHIP	22K	0.5%	1/10W
R553	1-216-841-11	METAL CHIP	47K	5%	1/10W
R560	1-216-864-11	SHORT CHIP	0		
R601	1-216-821-11	METAL CHIP	1K	5%	1/10W
R602	1-216-842-11	METAL CHIP	56K	5%	1/10W
R603	1-208-445-41	RES-CHIP	2.2K	2%	1/10W
R604	1-208-826-11	METAL CHIP	68K	0.5%	1/10W
R606	1-216-825-11	METAL CHIP	2.2K	5%	1/10W
R607	1-216-844-11	METAL CHIP	82K	5%	1/10W
R608	1-216-818-11	METAL CHIP	560	5%	1/10W
⚠ R609	1-249-405-11	CARBON	100	5%	1/4W
⚠ R610	1-249-405-11	CARBON	100	5%	1/4W
R611	1-216-214-00	RES-CHIP	4.7K	2%	1/8W
⚠ R612	1-240-855-91	CARBON	6.2K	5%	1/4W
⚠ R613	1-234-182-11	ENCAPSULATED COMPONENT			
R614	1-216-823-11	METAL CHIP	1.5K	5%	1/10W
R615	1-216-835-11	METAL CHIP	15K	5%	1/10W
R616	1-216-843-11	METAL CHIP	68K	5%	1/10W
⚠ R628	1-249-389-11	CARBON	4.7	5%	1/4W
⚠ R629	1-249-393-11	CARBON	10	5%	1/4W
R630	1-216-841-11	METAL CHIP	47K	5%	1/10W
R651	1-216-821-11	METAL CHIP	1K	5%	1/10W
R652	1-216-843-11	METAL CHIP	68K	5%	1/0W
R653	1-208-445-41	RES-CHIP	2.2K	2%	1/10W
R654	1-208-826-11	METAL CHIP	68K	0.5%	1/10W
R656	1-216-825-11	METAL CHIP	2.2K	5%	1/10W

Ref. No.	Part No.	Description			Remark
R657	1-216-844-11	METAL CHIP	82K	5%	1/10W
R658	1-216-818-11	METAL CHIP	560	5%	1/10W
⚠ R659	1-249-405-11	CARBON	100	5%	1/4W
⚠ R660	1-249-405-11	CARBON	100	5%	1/4W
R661	1-216-214-00	RES-CHIP	4.7K	2%	1/8W
⚠ R662	1-240-855-91	CARBON	6.2K	5%	1/4W
⚠ R663	1-234-182-11	ENCAPSULATED COMPONENT			
R664	1-216-823-11	METAL CHIP	1.5K	5%	1/10W
R665	1-216-835-11	METAL CHIP	15K	5%	1/10W
R666	1-216-843-11	METAL CHIP	68K	5%	1/10W
⚠ R678	1-249-389-11	CARBON	4.7	5%	1/4W
⚠ R679	1-249-393-11	CARBON	10	5%	1/4W
R680	1-216-841-11	METAL CHIP	47K	5%	1/10W
R701	1-216-821-11	METAL CHIP	1K	5%	1/10W
R702	1-216-843-11	METAL CHIP	68K	5%	1/10W
R703	1-208-445-41	RES-CHIP	2.2K	2%	1/10W
R704	1-208-826-11	METAL CHIP	68K	0.5%	1/10W
R706	1-216-825-11	METAL CHIP	2.2K	5%	1/10W
R707	1-216-844-11	METAL CHIP	82K	5%	1/10W
R708	1-216-818-11	METAL CHIP	560	5%	1/10W
⚠ R709	1-249-405-11	CARBON	100	5%	1/4W
⚠ R710	1-249-405-11	CARBON	100	5%	1/4W
R711	1-216-214-00	RES-CHIP	4.7K	2%	1/8W
⚠ R712	1-240-855-91	CARBON	6.2K	5%	1/4W
⚠ R713	1-234-182-11	ENCAPSULATED COMPONENT			
R714	1-216-823-11	METAL CHIP	1.5K	5%	1/10W
R715	1-216-835-11	METAL CHIP	15K	5%	1/10W
R716	1-216-843-11	METAL CHIP	68K	5%	1/10W
R725	1-216-833-11	METAL CHIP	10K	5%	1/10W
R726	1-216-845-11	METAL CHIP	100K	5%	1/10W
⚠ R728	1-249-389-11	CARBON	4.7	5%	1/4W
⚠ R729	1-249-393-11	CARBON	10	5%	1/4W
R730	1-216-841-11	METAL CHIP	47K	5%	1/10W
R751	1-216-821-11	METAL CHIP	1K	5%	1/10W
R752	1-216-843-11	METAL CHIP	68K	5%	1/10W
R753	1-208-445-41	RES-CHIP	2.2K	2%	1/10W
R754	1-208-826-11	METAL CHIP	68K	0.5%	1/10W
R756	1-216-825-11	METAL CHIP	2.2K	5%	1/10W
R757	1-216-844-11	METAL CHIP	82K	5%	1/10W
R758	1-216-818-11	METAL CHIP	560	5%	1/10W
⚠ R759	1-249-405-11	CARBON	100	5%	1/4W
⚠ R760	1-249-405-11	CARBON	100	5%	1/4W
R761	1-216-214-00	RES-CHIP	4.7K	2%	1/8W
⚠ R762	1-240-855-91	CARBON	6.2K	5%	1/4W
⚠ R763	1-234-182-11	ENCAPSULATED COMPONENT			
R764	1-216-823-11	METAL CHIP	1.5K	5%	1/10W
R765	1-216-835-11	METAL CHIP	15K	5%	1/10W
R766	1-216-843-11	METAL CHIP	68K	5%	1/10W
R775	1-216-833-11	METAL CHIP	10K	5%	1/10W
R776	1-216-845-11	METAL CHIP	100K	5%	1/10W
⚠ R778	1-249-389-11	CARBON	4.7	5%	1/4W
⚠ R779	1-249-393-11	CARBON	10	5%	1/4W
R780	1-216-841-11	METAL CHIP	47K	5%	1/10W
R801	1-216-821-11	METAL CHIP	1K	5%	1/10W
R802	1-216-843-11	METAL CHIP	68K	5%	1/10W
R803	1-208-445-41	RES-CHIP	2.2K	2%	1/10W
R804	1-208-826-11	METAL CHIP	68K	0.5%	1/10W
R806	1-216-825-11	METAL CHIP	2.2K	5%	1/10W
R807	1-216-844-11	METAL CHIP	82K	5%	1/10W
R808	1-216-818-11	METAL CHIP	560	5%	1/10W

Ref. No.	Part No.	Description			Remark
⚠ R809	1-249-405-11	CARBON	100	5%	1/4W
⚠ R810	1-249-405-11	CARBON	100	5%	1/4W
R811	1-216-214-00	RES-CHIP	4.7K	2%	1/8W
⚠ R812	1-240-855-91	CARBON	6.2K	5%	1/4W
⚠ R813	1-234-182-11	ENCAPSULATED COMPONENT			
R814	1-216-823-11	METAL CHIP	1.5K	5%	1/10W
R815	1-216-835-11	METAL CHIP	15K	5%	1/10W
R816	1-216-843-11	METAL CHIP	68K	5%	1/10W
⚠ R828	1-249-389-11	CARBON	4.7	5%	1/4W
⚠ R829	1-249-393-11	CARBON	10	5%	1/4W
R830	1-216-841-11	METAL CHIP	47K	5%	1/10W
R851	1-216-821-11	METAL CHIP	1K	5%	1/10W
R852	1-216-843-11	METAL CHIP	68K	5%	1/10W
R853	1-208-445-41	RES-CHIP	2.2K	2%	1/10W
R854	1-208-826-11	METAL CHIP	68K	0.5%	1/10W
R856	1-216-825-11	METAL CHIP	2.2K	5%	1/10W
R857	1-216-844-11	METAL CHIP	82K	5%	1/10W
R858	1-216-818-11	METAL CHIP	560	5%	1/10W
⚠ R859	1-249-405-11	CARBON	100	5%	1/4W
⚠ R860	1-249-405-11	CARBON	100	5%	1/4W
R861	1-216-214-00	RES-CHIP	4.7K	2%	1/8W
⚠ R862	1-240-855-91	CARBON	6.2K	5%	1/4W
⚠ R863	1-234-182-11	ENCAPSULATED COMPONENT			
R864	1-216-823-11	METAL CHIP	1.5K	5%	1/10W
R865	1-216-835-11	METAL CHIP	15K	5%	1/10W
R866	1-216-843-11	METAL CHIP	68K	5%	1/10W
R875	1-216-833-11	METAL CHIP	10K	5%	1/10W
R876	1-216-845-11	METAL CHIP	100K	5%	1/10W
⚠ R878	1-249-389-11	CARBON	4.7	5%	1/4W
⚠ R879	1-249-393-11	CARBON	10	5%	1/4W
R880	1-216-841-11	METAL CHIP	47K	5%	1/10W
⚠ R920	1-249-399-11	CARBON	33	5%	1/4W
R921	1-216-825-11	METAL CHIP	2.2K	5%	1/10W
⚠ R922	1-249-401-11	CARBON	47	5%	1/4W
R923	1-216-841-11	METAL CHIP	47K	5%	1/10W
RF910	1-523-085-11	FUSE	2.5A		250V
RF911	1-523-085-11	FUSE	2.5A		250V
RF912	1-523-080-11	FUSE	6.3A		250V
RF913	1-523-080-11	FUSE	6.3A		250V
⚠ RR11	1-249-393-11	CARBON	10	5%	1/4W (AR, MY, SAF, SP, TH)
⚠ RR12	1-249-393-11	CARBON	10	5%	1/4W (AR, MY, SAF, SP, TH)
⚠ RR13	1-249-393-11	CARBON	10	5%	1/4W (AR, MY, SAF, SP, TH)
⚠ RR14	1-249-393-11	CARBON	10	5%	1/4W (AR, MY, SAF, SP, TH)
⚠ RR15	1-249-393-11	CARBON	10	5%	1/4W (AR, MY, SAF, SP, TH)
⚠ RR17	1-249-393-11	CARBON	10	5%	1/4W (AR, MY, SAF, SP, TH)
		< RELAY >			
RY301	1-755-267-11	RELAY			
RY350	1-755-307-21	RELAY			
RY355	1-755-307-21	RELAY			
RY360	1-755-307-21	RELAY			
RY375	1-755-307-21	RELAY			
RY920	1-755-593-11	RELAY			

Ref. No.	Part No.	Description				Remark
		< TERMINAL BOARD >				
TB601	1-780-215-11	TERMINAL BOARD (SP) (4P) (SPEAKERS FRONT)				
TB602	1-694-805-11	TERMINAL BOARD (SPEAKERS SURROUND, SPEAKERS CENTER)				
TB607	1-694-157-21	TERMINAL, PUSH (2P) (SPEAKERS SUBWOOFER)				

****

VIDEO STANDBY SUPPLY BOARD
****

Ref. No.	Part No.	Description				Remark
		< CAPACITOR >				
C201	1-100-385-91	CERAMIC CHIP	0.47uF		25V	
C202	1-100-385-91	CERAMIC CHIP	0.47uF		25V	
C203	1-126-947-11	ELECT	47uF	20%	35V	
C204	1-126-947-11	ELECT	47uF	20%	35V	
C208	1-162-923-11	CERAMIC CHIP	47PF	5%	50V	
C209	1-162-923-11	CERAMIC CHIP	47PF	5%	50V	
C210	1-162-923-11	CERAMIC CHIP	47PF	5%	50V	
C211	1-126-964-11	ELECT	10uF	20%	50V	
C212	1-126-964-11	ELECT	10uF	20%	50V	
C213	1-126-964-11	ELECT	10uF	20%	50V	
C215	1-107-826-11	CERAMIC CHIP	0.1uF	10%	16V	
C217	1-107-826-11	CERAMIC CHIP	0.1uF	10%	16V	
C221	1-126-964-11	ELECT	10uF	20%	50V	
C222	1-126-964-11	ELECT	10uF	20%	50V	
C223	1-126-964-11	ELECT	10uF	20%	50V	
C224	1-126-964-11	ELECT	10uF	20%	50V	
C225	1-126-964-11	ELECT	10uF	20%	50V	
C226	1-126-964-11	ELECT	10uF	20%	50V	
C227	1-126-964-11	ELECT	10uF	20%	50V	
C228	1-126-964-11	ELECT	10uF	20%	50V	
C229	1-126-964-11	ELECT	10uF	20%	50V	
C232	1-107-826-11	CERAMIC CHIP	0.1uF	10%	16V	
C233	1-107-826-11	CERAMIC CHIP	0.1uF	10%	16V	
C239	1-107-826-11	CERAMIC CHIP	0.1uF	10%	16V	
C240	1-126-964-11	ELECT	10uF	20%	50V	
C251	1-135-372-31	ELECT	470uF	20%	10V	
C252	1-137-980-91	CERAMIC CHIP	0.47uF	10%	50V	
C253	1-135-372-31	ELECT	470uF	20%	10V	
C254	1-137-980-91	CERAMIC CHIP	0.47uF	10%	50V	
C256	1-135-372-31	ELECT	470uF	20%	10V	
C257	1-137-980-91	CERAMIC CHIP	0.47uF	10%	50V	
C258	1-100-566-91	CERAMIC CHIP	0.1uF	10%	25V	
C259	1-107-826-11	CERAMIC CHIP	0.1uF	10%	16V	(E51, EA)
C904	1-126-936-11	ELECT	3300uF	20%	16V	
C940	1-137-980-91	CERAMIC CHIP	0.47uF	10%	50V	
C941	1-137-980-91	CERAMIC CHIP	0.47uF	10%	50V	
C942	1-107-826-11	CERAMIC CHIP	0.1uF	10%	16V	
C943	1-107-826-11	CERAMIC CHIP	0.1uF	10%	16V	
C945	1-163-021-91	CERAMIC CHIP	0.01uF	10%	50V	
C950	1-137-980-91	CERAMIC CHIP	0.47uF	10%	50V	
C951	1-137-980-91	CERAMIC CHIP	0.47uF	10%	50V	
C953	1-126-936-11	ELECT	3300uF	20%	16V	
C992	1-126-960-11	ELECT	1uF	20%	50V	
		< CONNECTOR >				
* CNP240	1-564-506-11	PLUG, CONNECTOR 3P				
CNP901	1-564-321-00	PIN, CONNECTOR (3.96mm PITCH) 2P				
* CNP902	1-565-792-11	PIN, CONNECTOR (3.96mm PITCH) 2P				
* CNP940	1-564-506-11	PLUG, CONNECTOR 3P				
CNS203	1-778-227-41	CONNECTOR, BOARD TO BOARD 6P				
CNS271	1-774-743-41	CONNECTOR, BOARD TO BOARD 18P				
		< DIODE >				
D901	6-501-817-01	DIODE MA2J1110GLS0				
D941	8-719-081-52	DIODE D5SBA20-4003				
D946	8-719-053-18	DIODE 1SR154-400TE-25				
D947	8-719-053-18	DIODE 1SR154-400TE-25				
⚠ D950	8-719-053-18	DIODE 1SR154-400TE-25				
⚠ D951	8-719-053-18	DIODE 1SR154-400TE-25				
⚠ D952	8-719-053-18	DIODE 1SR154-400TE-25				
⚠ D953	8-719-053-18	DIODE 1SR154-400TE-25				
D990	6-500-335-01	DIODE MC2838-T112-1				
		< FUSE HOLDER >				
FH901	1-533-217-41	HOLDER, FUSE (EXCEPT E51, EA)				
FH902	1-533-217-41	HOLDER, FUSE (EXCEPT E51, EA)				
		< IC >				
IC201	6-713-031-01	IC KIA7805API-U/PF				
IC202	6-711-998-01	IC KIA7905PI				
IC210	6-704-199-01	IC NJM2595M-TE2				
IC220	6-706-767-01	IC NJM2586AM				
IC251	6-712-108-01	IC KIA7806API-U/PF				
IC252	6-705-464-01	IC BA50BC0T				
IC253	6-707-802-01	IC BA00CC0WT (-V5)				
		< JACK >				
J210	1-815-043-11	JACK, PIN 2P (MONITOR VIDEO OUT, VIDEO1 VIDEO IN)				
J211	1-794-978-11	JACK, PIN 3P (VIDEO1 VIDEO OUT, DVD VIDEO IN, SAT VIDEO IN)				
J220	1-816-592-11	JACK, PIN 9P (COMPONENT VIDEO MONITOR OUT, BD IN, DVD IN)				
J221	1-821-278-12	JACK 3P (COMPONENT VIDEO SAT IN)				
J222	1-820-056-21	SMALL TYPE JACK (3.5MM) (SYSTEM CONTROL OUT)				
		< RESISTOR >				
R211	1-211-990-11	METAL CHIP	75	0.5%	1/10W	
R212	1-211-990-11	METAL CHIP	75	0.5%	1/10W	
R213	1-211-990-11	METAL CHIP	75	0.5%	1/10W	
R214	1-211-990-11	METAL CHIP	75	0.5%	1/10W	
R215	1-211-990-11	METAL CHIP	75	0.5%	1/10W	
R221	1-211-990-11	METAL CHIP	75	0.5%	1/10W	
R222	1-211-990-11	METAL CHIP	75	0.5%	1/10W	
R223	1-211-990-11	METAL CHIP	75	0.5%	1/10W	
R224	1-211-990-11	METAL CHIP	75	0.5%	1/10W	
R225	1-211-990-11	METAL CHIP	75	0.5%	1/10W	
R226	1-211-990-11	METAL CHIP	75	0.5%	1/10W	
R227	1-211-990-11	METAL CHIP	75	0.5%	1/10W	
R228	1-211-990-11	METAL CHIP	75	0.5%	1/10W	
R229	1-211-990-11	METAL CHIP	75	0.5%	1/10W	
R245	1-218-847-11	METAL CHIP	1K	0.5%	1/10W	
R256	1-218-863-11	METAL CHIP	4.7K	0.5%	1/10W	
R257	1-218-877-11	METAL CHIP	18K	0.5%	1/10W	
R276	1-211-990-11	METAL CHIP	75	0.5%	1/10W	
R277	1-211-990-11	METAL CHIP	75	0.5%	1/10W	
R278	1-211-990-11	METAL CHIP	75	0.5%	1/10W	

Ref. No.	Part No.	Description			Remark
⚠ R279	1-215-882-00	METAL OXIDE	22	5%	2W
⚠ R280	1-216-373-11	METAL OXIDE	2.2	5%	2W
⚠ R902	1-249-381-11	CARBON	1	5%	1/4W
R903	1-216-825-11	METAL CHIP	2.2K	5%	1/10W
R904	1-216-841-11	METAL CHIP	47K	5%	1/10W
R990	1-216-841-11	METAL CHIP	47K	5%	1/10W
R991	1-216-837-11	METAL CHIP	22K	5%	1/10W
R993	1-216-833-11	METAL CHIP	10K	5%	1/10W
RF940	1-523-086-11	FUSE	3.15A	250V	
		< TRANSFORMER >			
⚠ T902	1-443-517-11	POWER TRANSFORMER SUB (EXCEPT E51, EA)			
⚠ T902	1-443-520-11	POWER TRANSFORMER SUB (E51, EA)			
		< TRANSISTOR >			
Q901	8-729-620-07	TRANSISTOR	2SC3052EF-T1-LEF		
Q990	8-729-620-07	TRANSISTOR	2SC3052EF-T1-LEF		
		< RELAY >			
⚠ RY901	1-755-541-11	RELAY			

****

POWER KEY BOARD
****

		< SWITCH >			
S110	1-771-410-21	SWITCH, TACTILE (I/⏻)			

****

TEMP-SENSOR BOARD
****

		< CAPACITOR >			
C4909	1-107-826-11	CERAMIC CHIP	0.1uF	10%	16V
C4910	1-165-908-11	CERAMIC CHIP	1uF	10%	10V
C4911	1-165-908-11	CERAMIC CHIP	1uF	10%	10V
		< DIODE >			
D4900	6-501-738-01	DIODE MAZ8062GMLS0			
		< IC >			
IC4902	6-710-072-01	IC LM61CIZ/LFT2			
IC4903	6-710-072-01	IC LM61CIZ/LFT2			
		< RESISTOR >			
R4927	1-216-797-11	METAL CHIP	10	5%	1/10W
R4928	1-216-809-11	METAL CHIP	100	5%	1/10W
R4929	1-216-797-11	METAL CHIP	10	5%	1/10W

****

VIDEO2 DCAC BOARD, COMPLETE
****

Ref. No.	Part No.	Description			Remark
		< CAPACITOR >			
C160	1-162-964-11	CERAMIC CHIP	0.001uF	10%	50V
C161	1-162-964-11	CERAMIC CHIP	0.001uF	10%	50V
C162	1-124-261-00	ELECT	10uF	20%	50V
C163	1-124-261-00	ELECT	10uF	20%	50V
C171	1-162-960-11	CERAMIC CHIP	220PF	10%	50V
C172	1-100-566-91	CERAMIC CHIP	0.1uF	10%	25V
C173	1-162-960-11	CERAMIC CHIP	220PF	10%	50V
C174	1-100-566-91	CERAMIC CHIP	0.1uF	10%	25V
C180	1-124-465-00	ELECT	0.47uF	20%	50V
C181	1-164-227-11	CERAMIC CHIP	0.022uF	10%	25V
C182	1-164-227-11	CERAMIC CHIP	0.022uF	10%	25V
C183	1-126-160-11	ELECT	1uF	20%	50V
C184	1-126-160-11	ELECT	1uF	20%	50V
C185	1-162-924-11	CERAMIC CHIP	56PF	5%	50V
C186	1-162-921-11	CERAMIC CHIP	33PF	5%	50V
C188	1-100-436-91	CERAMIC CHIP	0.033uF	10%	25V
C190	1-100-436-91	CERAMIC CHIP	0.033uF	10%	25V
C191	1-100-566-91	CERAMIC CHIP	0.1uF	10%	25V
C192	1-126-160-11	ELECT	1uF	20%	50V
C193	1-162-927-11	CERAMIC CHIP	100PF	5%	50V
C196	1-100-566-91	CERAMIC CHIP	0.1uF	10%	25V
		< CONNECTOR >			
* CN170	1-690-880-31	LEAD (WITH CONNECTOR)			
		< DIODE >			
D180	6-501-817-01	DIODE MA2J1110GLS0			
D181	6-501-817-01	DIODE MA2J1110GLS0			
		< IC >			
IC180	8-759-710-97	IC NJM4565M-D			
IC181	8-759-710-97	IC NJM4565M-D			
		< JACK >			
J180	1-822-453-11	SMALL TYPE JACK (3.5MM) (AUTO CAL MIC)			
J181	1-819-187-11	PIN JACK 3P (VIDEO 2 IN/PORTABLE AV IN VIDEO/AUDIO)			
		< RESISTOR >			
R171	1-218-285-11	METAL CHIP	75	5%	1/10W
R172	1-216-821-11	METAL CHIP	1K	5%	1/10W
R173	1-216-821-11	METAL CHIP	1K	5%	1/10W
R180	1-216-835-11	METAL CHIP	15K	5%	1/10W
R181	1-216-839-11	METAL CHIP	33K	5%	1/10W
R182	1-216-825-11	METAL CHIP	2.2K	5%	1/10W
R183	1-216-833-11	METAL CHIP	10K	5%	1/10W
R184	1-216-821-11	METAL CHIP	1K	5%	1/10W
R185	1-216-833-11	METAL CHIP	10K	5%	1/10W
R186	1-216-857-11	METAL CHIP	1M	5%	1/10W
R187	1-216-854-11	METAL CHIP	560K	5%	1/10W
R188	1-216-833-11	METAL CHIP	10K	5%	1/10W
R190	1-216-833-11	METAL CHIP	10K	5%	1/10W
R191	1-216-822-11	METAL CHIP	1.2K	5%	1/10W
R192	1-216-825-11	METAL CHIP	2.2K	5%	1/10W
R193	1-216-821-11	METAL CHIP	1K	5%	1/10W
R194	1-216-841-11	METAL CHIP	47K	5%	1/10W
R195	1-216-841-11	METAL CHIP	47K	5%	1/10W
R196	1-216-864-11	SHORT CHIP	0		

****

Ref. No.	Part No.	Description	Remark
		MISCELLANEOUS	
		**********	
56	1-828-372-11	WIRE (FLAT TYPE) (21 CORE)	
101	1-828-956-11	WIRE (FLAT TYPE) (9 CORE)	
102	1-784-368-51	CONNECTOR, FFC/FPC 9P	
⚠ 105	1-777-071-83	CORD, POWER (EXCEPT AR, TH)	
⚠ 105	1-829-387-11	CORD, POWER (AR)	
⚠ 105	1-834-288-11	CORD, POWER (TH)	
⚠ 106	1-569-008-33	ADAPTOR, CONVERSION 2P (EA)	
⚠ 107	1-770-019-71	ADAPTOR, CONVERSION 3P (EA)	
⚠ F901	1-532-464-33	FUSE (T2.5AL/250V) (EXCEPT E51, EA)	
⚠ F902	1-532-504-33	FUSE (T4AL/250V) (EA)	
⚠ F902	1-532-505-33	FUSE (T5AL/250V) (E51)	
⚠ F903	1-532-464-33	FUSE (T2.5AL/250V) (E51, EA)	
Q603	6-702-390-01	TRANSISTOR MN2488-OPY-MK	
Q604	6-702-391-01	TRANSISTOR MP1620-OPY-MK	
Q653	6-702-390-01	TRANSISTOR MN2488-OPY-MK	
Q654	6-702-391-01	TRANSISTOR MP1620-OPY-MK	
Q703	6-702-390-01	TRANSISTOR MN2488-OPY-MK	
Q704	6-702-391-01	TRANSISTOR MP1620-OPY-MK	
Q753	6-702-390-01	TRANSISTOR MN2488-OPY-MK	
Q754	6-702-391-01	TRANSISTOR MP1620-OPY-MK	
Q803	6-702-390-01	TRANSISTOR MN2488-OPY-MK	
Q804	6-702-391-01	TRANSISTOR MP1620-OPY-MK	
Q853	6-702-390-01	TRANSISTOR MN2488-OPY-MK	
Q854	6-702-391-01	TRANSISTOR MP1620-OPY-MK	
⚠ T901	1-445-696-11	TRANSFORMER, POWER (MAIN) (MY, SAF, SP)	
⚠ T901	1-445-711-11	POWER TRANSFORMER (MAIN) (E51, EA)	
⚠ T901	1-445-724-11	POWER TRANSFORMER (MAIN) (AR)	
⚠ T901	1-445-750-11	POWER TRANSFORMER (MAIN) (EA)	
TN1	1-693-728-31	TUNER (FM/AM) (E51, EA)	
TN1	1-693-749-21	TUNER (FM/AM) (EXCEPT E51, EA)	

****

REVISION HISTORY

Checking the version allows you to jump to the revised page.
Also, clicking the version at the top of the revised page allows you to jump to the next revised page.

Ver.	Date	Description of Revision
1.0	2009.04	New
1.1	2009.08	Additional of Thai model.
1.2	2009.11	1) Change P/N for T101 in DISPLAY board.
		2) Change P/N for C920, C921 in MAIN board.
		3) C2112 shift upward in DIGITAL board.
		4) Additional checker land CL070 at B-side to improve production jig test in DIGITAL board.
		5) Change PWB suffix for DIGITAL board from 21 to 22.
		6) Change P/N for C608, C609, C658, C659, C708, C709, C758, C759, C858, C859 in MAIN board.