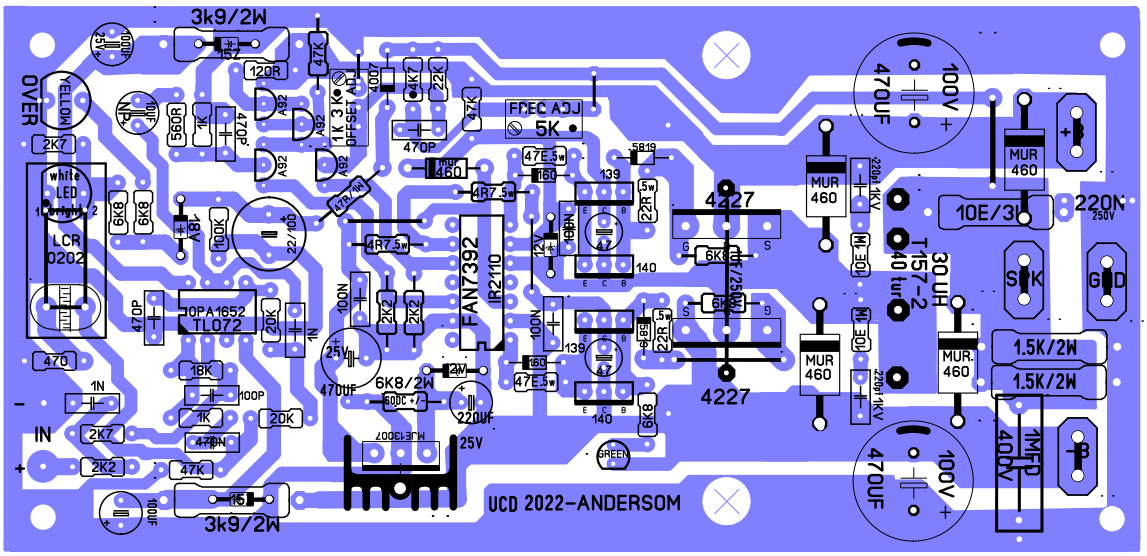
3k9/2W
OVER
IN
FREQ ADJ
5K
FAN7392
IR2110
OPA1652
TL072
LCR
0202
4227
MUR
460
470UF
100V
10E/3W
220N
250V
T157-2
40 turn
30UH
SPK
GND
1.5K/2W
1.5K/2W
1MFD
400V
UCD 2022-ANDERSOM