HCD-SHAKEX1/SHAKEX3/ SHAKEX7

SERVICE MANUAL

Ver. 1.3 2015.07

AEP Model
UK Model
Australian Model
HCD-SHAKEX1/SHAKEX3
E Model
HCD-SHAKEX1/SHAKEX3/SHAKEX7

Photo: HCD-SHAKEX7

- HCD-SHAKEX1 is the tuner, USB, DVD Player, Bluetooth, NFC and amplifier section in SHAKE-X1D.
- HCD-SHAKEX3 is the tuner, USB, DVD Player, Bluetooth, NFC and amplifier section in SHAKE-X3D.
- HCD-SHAKEX7 is the tuner, USB, DVD Player, Bluetooth, NFC and amplifier section in SHAKE-X7D.

DVD Section	Model Name Using Similar Mechanism	HCD-GPX555/GPX888
	DVD Mechanism Type	CDM90-DVBU204//M
	Optical Pick-up Name	CMS-S76RFG1 OR CMS-S76RFGP

SPECIFICATIONS

Amplifier section
The following are measured at
AC 120 V – 240 V, 50/60 Hz

SHAKE-X7D
Power Output (rated):
800 W + 800 W (at 8 ohms, 100 Hz, 1% THD)
RMS output power (reference):
1,200 W + 1,200 W (per channel at 8 ohms, 100 Hz)

SHAKE-X3D
Power Output (rated):
400 W + 400 W (at 4 ohms, 100 Hz, 1% THD)
RMS output power (reference):
600 W + 600 W (per channel at 4 ohms, 100 Hz)

SHAKE-X1D
Power Output (rated):
400 W + 400 W (at 4 ohms, 100 Hz, 1% THD)
RMS output power (reference):
600 W + 600 W (per channel at 4 ohms, 100 Hz)

Inputs
AUDIO IN 1/PARTY CHAIN IN L/R
Voltage 2 V, impedance 47 kilohms
AUDIO IN 2 L/R
Voltage 2 V, impedance 47 kilohms
MIC 1, MIC 2
Sensitivity 1 mV, impedance 10 kilohms
(USB) 1, (USB) 2 port: Type A

Outputs
AUDIO OUT/PARTY CHAIN OUT L/R
Voltage 2 V, impedance 1 kilohm
VIDEO OUT
Max. output level 1 Vp-p, unbalanced, Sync. negative load impedance 75 ohms

USB section
Supported bit rate
WMA: 48 kbps – 192 kbps, VBR, CBR
AAC: 48 kbps – 320 kbps, VBR, CBR
Sampling frequencies
WMA: 44.1 kHz
AAC: 44.1 kHz
Supported USB device
Mass Storage Class
Maximum current
1 A

Disc/USB section
Supported bit rate
MPEG1 Layer-3:
32 kbps – 320 kbps, VBR
Sampling frequencies
MPEG1 Layer-3:
32 kHz/44.1 kHz/48 kHz
Xvid
Video codec: Xvid
Bit rate: 4.854 Mbps (MAX)
Resolution/Frame rate:
720 × 480, 30 fps
720 × 576, 25 fps
Audio codec: MP3
MPEG4
File format: MP4 File Format
Video codec:
MPEG4 Simple Profile
(AVC is not compatible.)
Bit rate: 4 Mbps
Resolution/Frame rate:
720 × 576, 30 fps
Audio codec: AAC-LC
(HE-AAC is not compatible.)
DRM: Not compatible

Disc player section
System
Compact disc and digital audio and video system
Laser Diode Properties
Emission Duration: Continuous
Laser Output*: Less than 44.6 µW
* This output is the value measurement at a distance of 200 mm from the objective lens surface on the Optical Pick-up Block with 7 mm aperture.
Frequency response
20 Hz – 20 kHz
Video color system format
NTSC and PAL

Tuner section
FM stereo, FM/AM superheterodyne tuner
Antenna
FM lead antenna
AM loop antenna

FM tuner section
Tuning range
87.5 MHz – 108.0 MHz (50 kHz step)

AM tuner section
Tuning range
European and Russian models only:
531 kHz – 1,602 kHz (9 kHz step)
Latin American and Australian models only:
531 kHz – 1,710 kHz (9 kHz step)
530 kHz – 1,710 kHz (10 kHz step)
Other models:
531 kHz – 1,602 kHz (9 kHz step)
530 kHz – 1,610 kHz (10 kHz step)

BLUETOOTH section
Communication system
BLUETOOTH Standard version 3.0
Output
BLUETOOTH Standard Power Class 2
Maximum communication range
Line of sight approx. 10 m[1)]
Frequency band
2.4 GHz band (2.4000 GHz – 2.4835 GHz)
Modulation method
FHSS (Freq Hopping Spread Spectrum)
Compatible BLUETOOTH profiles[2)]
A2DP (Advanced Audio Distribution Profile)
AVRCP (Audio Video Remote Control Profile)
SPP (Serial Port Profile)
Supported codecs
SBC (Sub Band Codec)
AAC (Advanced Audio Coding)

[1)] The actual range will vary depending on factors such as obstacles between devices, magnetic fields around a microwave oven, static electricity, reception sensitivity, antenna's performance, operating system, software application, etc.
[2)] BLUETOOTH standard profiles indicate the purpose of BLUETOOTH communication between devices.

General
Power requirements
AC 120 V – 240 V, 50/60 Hz
Power consumption
SHAKE-X7D: 375 W
SHAKE-X1D/X3D: 220 W
Power consumption (at the Power Saving mode)
0.5 W (When "BT STBY" is set to "OFF")
4 W (When "BT STBY" is set to "ON")
Dimensions (w/h/d) (excl. speakers) (Approx.)
455 mm × 165 mm × 330 mm
Mass (excl. speakers) (Approx.)
SHAKE-X7D: 6.3 kg
SHAKE-X1D/X3D: 5.9 kg

Supplied accessories
- Remote control (1)
- R03 (size AAA) batteries (2)
- FM lead/AM loop antenna (1)

SHAKE-X7D only
- Unit: HCD-SHAKEX7 (1)
- Speaker system: SS-SHAKEX7 (2)
- AC power cord (mains lead)
  – Latin American, Middle East, and African models only (2)*
  – Other models (1)

* The quantity of the AC power cord (mains lead) supplied depends on the area.

– Continued on next page –

DVD RECEIVER

9-890-663-04
2015G80-1
Sony Corporation
Published by Sony EMCS (Malaysia) PG Tec
© 2015.07

SONY®

SHAKE-X3D only
- Unit: HCD-SHAKEX3 (1)
- Speaker system: SS-SHAKEX3 (2)
- AC power cord (mains lead) (1)
- AC plug adaptor (1) (supplied only for certain areas)
  The AC plug adaptor is not use in Chile.
  Use this plug adaptor in the countries where it is necessary.

SHAKE-X1D only
- Unit: HCD-SHAKEX1 (1)
- Speaker system: SS-SHAKEX1 (2)
- AC power cord (mains lead) (1)
- AC plug adaptor (1) (supplied only for certain areas)
  The AC plug adaptor is not use in Chile. Use this plug adaptor in the countries where it is necessary.

Design and specifications are subject to change without notice.

License and Trademark Notice
- DVD is a trademark of DVD Format/Logo Licensing Corporation.
- "DVD+RW", "DVD-RW", "DVD+R", "DVD-R", "DVD VIDEO", and the "CD" logos are trademarks.
- MPEG Layer-3 audio coding technology and patents licensed from Fraunhofer IIS and Thomson.
- Windows Media is either a registered trademark or trademark of Microsoft Corporation in the United States and/or other countries.
- This product is protected by certain intellectual property rights of Microsoft Corporation. Use or distribution of such technology outside of this product is prohibited without a license from Microsoft or an authorized Microsoft subsidiary.
- "WALKMAN" and "WALKMAN" logo are registered trademarks of Sony Corporation.
- This system incorporates Dolby* Digital.
  * Manufactured under license from Dolby Laboratories. Dolby and the double-D symbol are trademarks of Dolby Laboratories.
- The BLUETOOTH® word mark and logos are registered trademarks owned by Bluetooth SIG, Inc. and any use of such marks by Sony Corporation is under license. Other trademarks and trade names are those of their respective owners.
- The N Mark is a trademark or registered trademark of NFC Forum, Inc. in the United States and in other countries.
- Android™ is a trademark of Google Inc.
- Google Play™ is a trademark of Google Inc.
- Apple, the Apple logo, iPhone, and iPod touch are trademarks of Apple Inc., registered in the U.S. and other countries. App Store is a service mark of Apple Inc.
- "Made for iPod" and "Made for iPhone" mean that an electronic accessory has been designed to connect specifically to iPod or iPhone, respectively, and has been certified by the developer to meet Apple performance standards. Apple is not responsible for the operation of this device or its compliance with safety and regulatory standards. Please note that the use of this accessory with iPod or iPhone may affect wireless performance.
- THIS PRODUCT IS LICENSED UNDER THE MPEG-4 VISUAL PATENT PORTFOLIO LICENSE FOR THE PERSONAL AND NON-COMMERCIAL USE OF A CONSUMER FOR

  (i) ENCODING VIDEO IN COMPLIANCE WITH THE MPEG-4 VISUAL STANDARD ("MPEG-4 VIDEO")

  AND/OR

  (ii) DECODING MPEG-4 VIDEO THAT WAS ENCODED BY A CONSUMER ENGAGED IN A PERSONAL AND NON-COMMERCIAL ACTIVITY AND/OR WAS OBTAINED FROM A VIDEO PROVIDER LICENSED TO PROVIDE MPEG-4 VIDEO.

  NO LICENSE IS GRANTED OR SHALL BE IMPLIED FOR ANY OTHER USE. ADDITIONAL INFORMATION INCLUDING THAT RELATING TO PROMOTIONAL, INTERNAL AND COMMERCIAL USES AND LICENSING MAY BE OBTAINED FROM MPEG LA, L.L.C.
  HTTP://WWW.MPEGLA.COM
- All other trademarks are trademarks of their respective owners.

- Abbreviation
  AR : Argentina model
  AUS : Australian model
  E4 : African model
  E12 : 220 – 240 V AC area in E models
  EA : Saudi Arabia model
  LA9 : Latin-American model
  MY : Malaysia model
  RU : Russian model
  TH : Thai model

SAFETY CHECK-OUT

After correcting the original service problem, perform the following safety check before releasing the set to the customer:
Check the antenna terminals, metal trim, "metallized" knobs, screws, and all other exposed metal parts for AC leakage. Check leakage as described below.

LEAKAGE TEST

The AC leakage from any exposed metal part to earth ground and from all exposed metal parts to any exposed metal part having a return to chassis, must not exceed 0.5 mA (500 microamperes). Leakage current can be measured by any one of three methods.

1. A commercial leakage tester, such as the Simpson 229 or RCA WT-540A. Follow the manufacturers' instructions to use these instruments.
2. A battery-operated AC milliammeter. The Data Precision 245 digital multimeter is suitable for this job.
3. Measuring the voltage drop across a resistor by means of a VOM or battery-operated AC voltmeter. The "limit" indication is 0.75 V, so analog meters must have an accurate low-voltage scale. The Simpson 250 and Sanwa SH-63Trd are examples of a passive VOM that is suitable. Nearly all battery operated digital multimeters that have a 2V AC range are suitable. (See Fig. A)

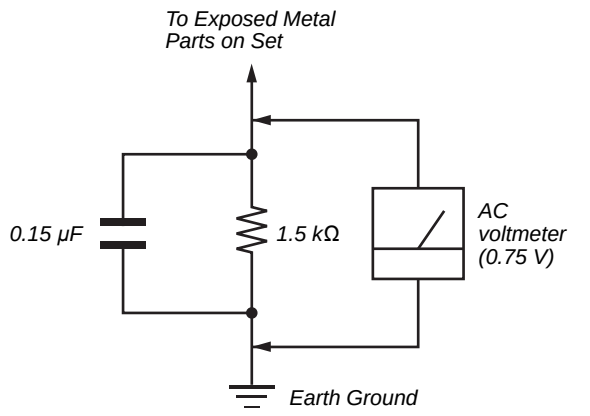

Fig. A. Using an AC voltmeter to check AC leakage.

SAFETY-RELATED COMPONENT WARNING!

COMPONENTS IDENTIFIED BY MARK ⚠ OR DOTTED LINE WITH MARK ⚠ ON THE SCHEMATIC DIAGRAMS AND IN THE PARTS LIST ARE CRITICAL TO SAFE OPERATION. REPLACE THESE COMPONENTS WITH SONY PARTS WHOSE PART NUMBERS APPEAR AS SHOWN IN THIS MANUAL OR IN SUPPLEMENTS PUBLISHED BY SONY.

TABLE OF CONTENTS

1. SERVICING NOTES 4

2. DISASSEMBLY
2-1. Panel, Side (L), Panel, Side (R), Panel, Top Assy 10
2-2. 4CH DAMP Board..... 11
2-3. Back Panel Section 12
2-4. Panel, Loading Assy 12
2-5. CDM90-DVBU204//M..... 13
2-6. Front Panel Section..... 14
2-7. MOTHERBOARD Board..... 14
2-8. REGULATOR, SWITCHING (SSN-152AD) (SHAKEX1/SHAKEX3), SWITCHING REGULATOR (SHAKEX7)..... 15
2-9. Service, Optical Device (7G), Cable, Flexible Flat 16

3. TEST MODE 17

4. ELECTRICAL CHECK 22

5. TROUBLESHOOTING 23

6. DIAGRAMS
6-1. Block Diagram - RS SERVO, USB Section -..... 31
6-2. Block Diagram - MAIN Section -..... 32
6-3. Block Diagram - AMP Section -..... 33
6-4. Block Diagram - PANEL, POWER SUPPLY Section -..... 34
6-5. Printed Wiring Board - MOTHERBOARD Board (Component Side) -..... 36
6-6. Printed Wiring Board - MOTHERBOARD Board (Conductor Side) - 37
6-7. Schematic Diagram - MOTHERBOARD Board (1/8) - 38
6-8. Schematic Diagram - MOTHERBOARD Board (2/8) - 39
6-9. Schematic Diagram - MOTHERBOARD Board (3/8) - 40
6-10. Schematic Diagram - MOTHERBOARD Board (4/8) - 41
6-11. Schematic Diagram - MOTHERBOARD Board (5/8) - 42
6-12. Schematic Diagram - MOTHERBOARD Board (6/8) - 43
6-13. Schematic Diagram - MOTHERBOARD Board (7/8) - 44
6-14. Schematic Diagram - MOTHERBOARD Board (8/8) - 45
6-15. Printed Wiring Board - 4CH DAMP Board (Component Side) -..... 46
6-16. Printed Wiring Board - 4CH DAMP Board (Conductor Side) - 47
6-17. Schematic Diagram - 4CH DAMP Board (1/2) -..... 48
6-18. Schematic Diagram - 4CH DAMP Board (2/2) -..... 49
6-19. Printed Wiring Board - STR Board - 50
6-20. Schematic Diagram - STR Board -..... 51
6-21. Printed Wiring Board - DISPLAY Board - 52
6-22. Schematic Diagram - DISPLAY Board -..... 53
6-23. Printed Wiring Board - MIC Board -..... 54
6-24. Schematic Diagram - MIC Board -..... 55
6-25. Printed Wiring Board - LED BAR Board - 55
6-26. Schematic Diagram - LED BAR Board - 56
6-27. Printed Wiring Board - IR Board - 56
6-28. Schematic Diagram - IR Board - 56

7. EXPLODED VIEWS
7-1. Panel, Side Section 70
7-2. Back Panel Section 71
7-3. MOTHERBOARD Board Section..... 72
7-4. Front Panel Section..... 73
7-5. Chassis Section 74
7-6. Top Panel Section 75
7-7. DVD Mechanism Section (CDM90-DVBU204//M)..... 76

8. ELECTRICAL PARTS LIST 77

SECTION 1
SERVICING NOTES

Notes on chip component replacement

- Never reuse a disconnected chip component.
- Notice that the minus side of a tantalum capacitor may be damaged by heat.

Flexible Circuit Board Repairing

- Keep the temperature of the soldering iron around 270 °C during repairing.
- Do not touch the soldering iron on the same conductor of the circuit board (within 3 times).
- Be careful not to apply force on the conductor when soldering or unsoldering.

UNLEADED SOLDER

Boards requiring use of unleaded solder are printed with the leadfree mark (LF) indicating the solder contains no lead.
(Caution: Some printed circuit boards may not come printed with the lead free mark due to their particular size)

: LEAD FREE MARK

Unleaded solder has the following characteristics.

- Unleaded solder melts at a temperature about 40 °C higher than ordinary solder.
  Ordinary soldering irons can be used but the iron tip has to be applied to the solder joint for a slightly longer time.
  Soldering irons using a temperature regulator should be set to about 350 °C.
  Caution: The printed pattern (copper foil) may peel away if the heated tip is applied for too long, so be careful!
- Strong viscosity
  Unleaded solder is more viscous (sticky, less prone to flow) than ordinary solder so use caution not to let solder bridges occur such as on IC pins, etc.
- Usable with ordinary solder
  It is best to use only unleaded solder but unleaded solder may also be added to ordinary solder.

CAUTION
Use of controls or adjustments or performance of procedures other than those specified herein may result in hazardous radiation exposure.

NOTES ON HANDLING THE OPTICAL PICK-UP BLOCK OR BASE UNIT

The laser diode in the optical pick-up block may suffer electrostatic break-down because of the potential difference generated by the charged electrostatic load, etc. on clothing and the human body.
During repair, pay attention to electrostatic break-down and also use the procedure in the printed matter which is included in the repair parts.
The flexible board is easily damaged and should be handled with care.

NOTES ON LASER DIODE EMISSION CHECK

The laser beam on this model is concentrated so as to be focused on the disc reflective surface by the objective lens in the optical pickup block. Therefore, when checking the laser diode emission, observe from more than 30 cm away from the objective lens.

CLASS 1 LASER PRODUCT
LASER KLASSE 1
LUOKAN 1 LASERLAITE
KLASS 1 LASERAPPARAT

This appliance is classified as a CLASS 1 LASER product. This marking is located on the rear exterior.

MODEL IDENTIFICATION

- BACK PANEL -

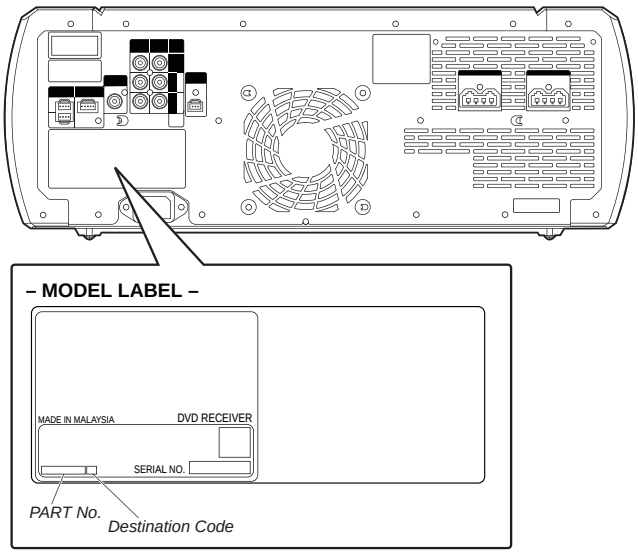

Model	Part No.
HCD-SHAKEX3: AEP, UK, AUS	4-559-753-1□
HCD-SHAKEX3: E4	4-559-753-3□
HCD-SHAKEX3: EA	4-559-753-4□
HCD-SHAKEX3: MY	4-559-753-5□
HCD-SHAKEX3: TH	4-559-753-7□
HCD-SHAKEX3: AR	4-559-754-2□
HCD-SHAKEX3: RU	4-559-754-3□
HCD-SHAKEX3: LA9	4-559-754-4□
HCD-SHAKEX7: E4	4-559-755-0□
HCD-SHAKEX7: EA	4-559-755-1□
HCD-SHAKEX7: MY	4-559-755-2□
HCD-SHAKEX7: TH	4-559-755-4□
HCD-SHAKEX7: AR	4-559-755-8□
HCD-SHAKEX7: LA9	4-559-755-9□
HCD-SHAKEX1: LA9	4-569-308-0□
HCD-SHAKEX1: AEP, UK, AUS	4-569-308-1□
HCD-SHAKEX1: E4	4-569-308-2□
HCD-SHAKEX1: EA	4-569-308-3□
HCD-SHAKEX1: MY	4-569-308-4□
HCD-SHAKEX1: TH	4-569-308-5□
HCD-SHAKEX1: AR	4-569-308-7□
HCD-SHAKEX1: RU	4-569-308-8□
HCD-SHAKEX7: E12	4-571-084-0□

- Abbreviation
  AR : Argentina model
  AUS : Australian model
  E4 : African model
  E12 : 220 – 240 V AC area in E models
  EA : Saudi Arabia model
  LA9 : Latin-American model
  MY : Malaysia model
  RU : Russian model
  TH : Thai model

PLAYABLE DISCS

- DVD+R/DVD+RW
- AUDIO CD
- CD-R/CD-RW/DVD-R/DVD-RW
  - audio data
  - MP3 files that conforms to ISO9660 Level 1/Level 2, or Joliet (expansion format).

Notes

- MP3 (MPEG 1 Audio Layer-3) is a standard format defined by ISO (International Organization for Standardization) which compresses audio data. MP3 files must be in MPEG 1 Audio Layer-3 format.
- The system can only play back MP3 files that have a file extension of ".mp3".

NOTE OF REPLACING THE IC1008 AND IC1010 ON THE 4CH DAMP BOARD

IC1008 and IC1010 on the 4CH DAMP board cannot exchange with single. When these parts on the 4CH DAMP board are damaged, exchange the entire mounted board.

NOTE OF REPLACING THE IC002, IC101, IC105, IC106, IC301, IC302 AND IC303 ON THE MOTHERBOARD BOARD

IC002, IC101, IC105, IC106, IC301, IC302 and IC303 on the MOTHERBOARD board cannot exchange with single. When these parts on the MOTHERBOARD board are damaged, exchange the entire mounted board.

NOTE OF REPLACEMENT OF THE MS-476 BOARD

When the MS-476 board is defective, exchange the entire LOADING COMPLETE ASSY (T).

[DISC TRAY LOCK MODE]

This mode let you lock the disc tray. When this mode is activated, the disc tray will not open when [⏏] button is pressed. The message "LOCKED" will be displayed on the fluorescent indicator tube. This mode only applied when there is disc(s) on the tray.

Procedure:

1. Press [I/⏻] button to turn on the system.
2. Select DVD/CD function.
3. Press [DJ OFF] button and [ISOLATOR] button simultaneously and hold down until "LOCKED" or "UNLOCKED" displayed on the fluorescent indicator tube (around 5 seconds).

Note: When "LOCKED" is displayed, the slot lock is not released by turning power on/off with the [I/⏻] button.

NOTE OF REPLACING MOTHERBOARD BOARD OR BLUETOOTH MODULE OR RC-S730 (WW) BOARD

When the MOTHERBOARD board or BLUETOOTH module or RC-S730 (WW) board are replaced, please execute the below service mode.

Pairing this system with a *Bluetooth* device

1. Press the [I/⏻] button to turn the power on.
2. Place the *Bluetooth* device within 1 meter from the system.
3. Press BLUETOOTH on the unit to select *Bluetooth* function. "BLUETOOTH" appears in the display panel.
4. Hold down BLUETOOTH on the unit for 2 seconds or more. "PAIRING" flashes in the display panel.
5. Perform the pairing procedure on the *Bluetooth* device.
6. Select the model number of the unit on the display of the *Bluetooth* device.
   For example, select "SONY:SHAKE-X1D or SHAKE-X3D or SHAKE-X7D".
   If passkey is required on the *Bluetooth* device, enter "0000".
7. Perform the *Bluetooth* connection on the *Bluetooth* device.
8. When pairing is completed and the *Bluetooth* connection is established, *Bluetooth* device name appears in the display panel.
9. To cancel pairing operation, hold down BLUETOOTH on the unit for 2 seconds or more until "BLUETOOTH" appears in the display panel.

Connecting with a smartphone by one touch (NFC)

Note: The operation in this mode must use a NFC-compatible smartphone (Smartphones with a built-in NFC function [OS: Android 2.3.3 or later, excluding Android 3.x])

1. Press the [I/⏻] button to turn the power on.
2. Download and install the app "NFC Easy Connect".
   Download the free Android app from Google Play by searching for "NFC Easy Connect".
3. Start the app "NFC Easy Connect" on the smartphone.
   Make sure that the application screen is displayed.
4. Touch the smartphone to the N-Mark on the system until the smartphone vibrates.

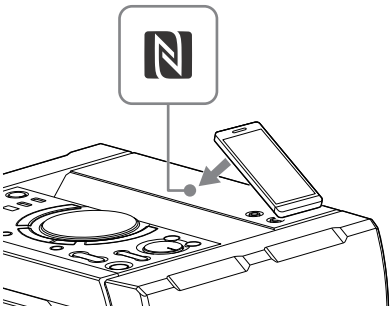

   Complete the connection by following the instructions displayed on the smartphone.
5. When pairing is completed and the *Bluetooth* connection is established, the *Bluetooth* device name appears in the display panel.

Playing music from a *Bluetooth* device

For a *Bluetooth* device

1. Press the [I/⏻] button to turn the power on.
2. Press BLUETOOTH on the unit to select *Bluetooth* function.
   "BLUETOOTH" appears in the display panel.
3. Establish connection with the *Bluetooth* device.
   Press BLUETOOTH on the unit to connect to the last connected *Bluetooth* device.
   Perform the *Bluetooth* connection from the *Bluetooth* device if the device is not connected.
   Once the connection is established, the *Bluetooth* device name appears in the display panel.
4. Press ►.
   Depending on the *Bluetooth* device,
   – you may have to press ► twice.
   – you may need to start playback of an audio source on the *Bluetooth* device.

For an NFC-compatible smartphone

1. Press the [I/⏻] button to turn the power on.
   Touch the smartphone to the N-Mark on the system to establish the *Bluetooth* connection.
   Start playback of an audio source on the smartphone. For details on playback, refer to the operating instructions of your smartphone.

To disconnect the *Bluetooth* device

For a *Bluetooth* device

Press BLUETOOTH on the unit.
"BLUETOOTH" appears in the display panel.

For an NFC-compatible smartphone

Touch the smartphone to the N-Mark on the system again.

To erase all the pairing registration information perform COLD RESET test mode (Refer page 17).

HOW TO OPEN THE TRAY WHEN POWER SWITCH TURN OFF

Note 1: After the side (L, R) panel assy, top panel and fan is removed, this work is done.
Note 2: Please prepare the thin wire (clip etc. processed to the length of 8 cm or more).

❶ *Remove the side (L,R) panel, top panel section, tunnel bracket, fan bracket and DC fan. (Illustration of disassembly is omitted.)*

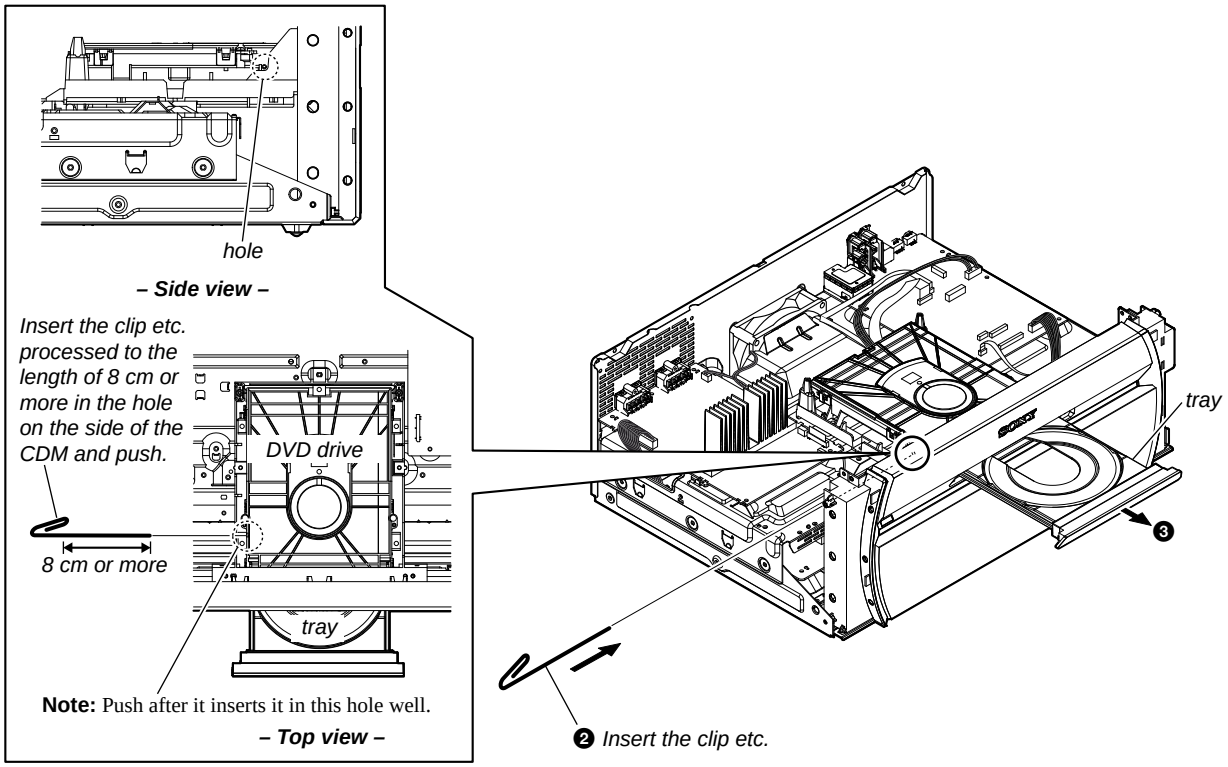

CAPACITOR DISCHARGE FOR ELECTRIC SHOCK PREVENTION

Switching Regulator Board (Conductor side view) (HCD-SHAKEX1/SHAKEX3)

In checking the Switching Regulator board, make 3 capacitors discharge of C18, C20 and C27 for eletrical shock prevention.

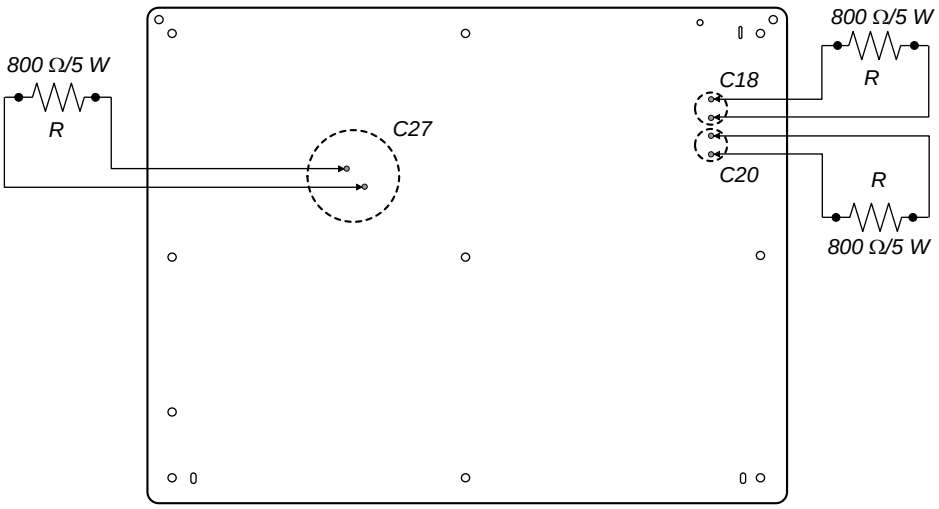

CAPACITOR DISCHARGE FOR ELECTRIC SHOCK PREVENTION

Switching Regulator Board (Conductor side view) (HCD-SHAKEX7)

In checking the Switching Regulator board, make 4 capacitors discharge of C18, C20, C27 and C28 for eletrical shock prevention.

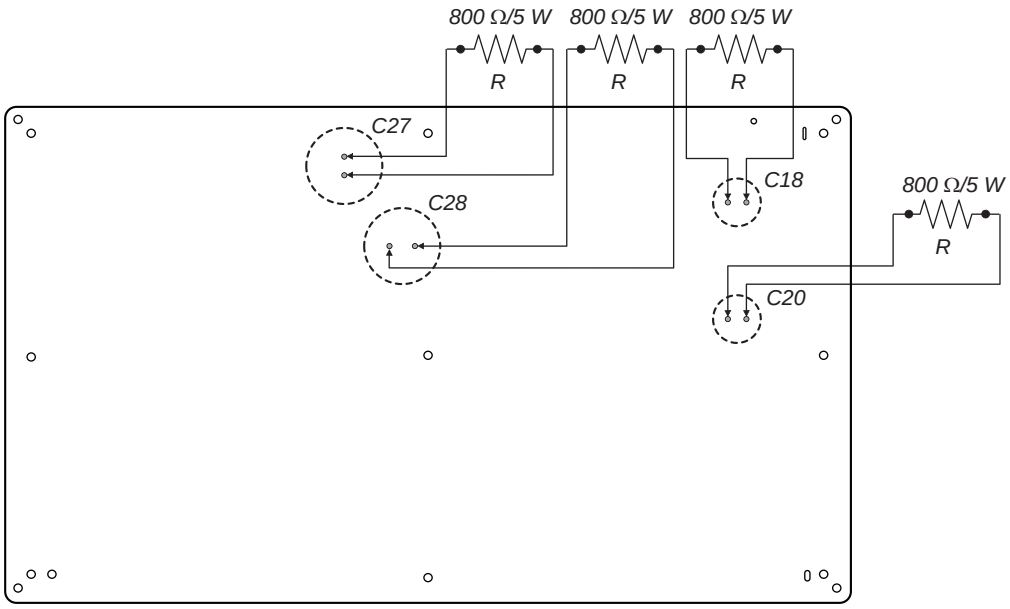

SECTION 2
DISASSEMBLY

Note: Disassemble the unit in the order as shown below.

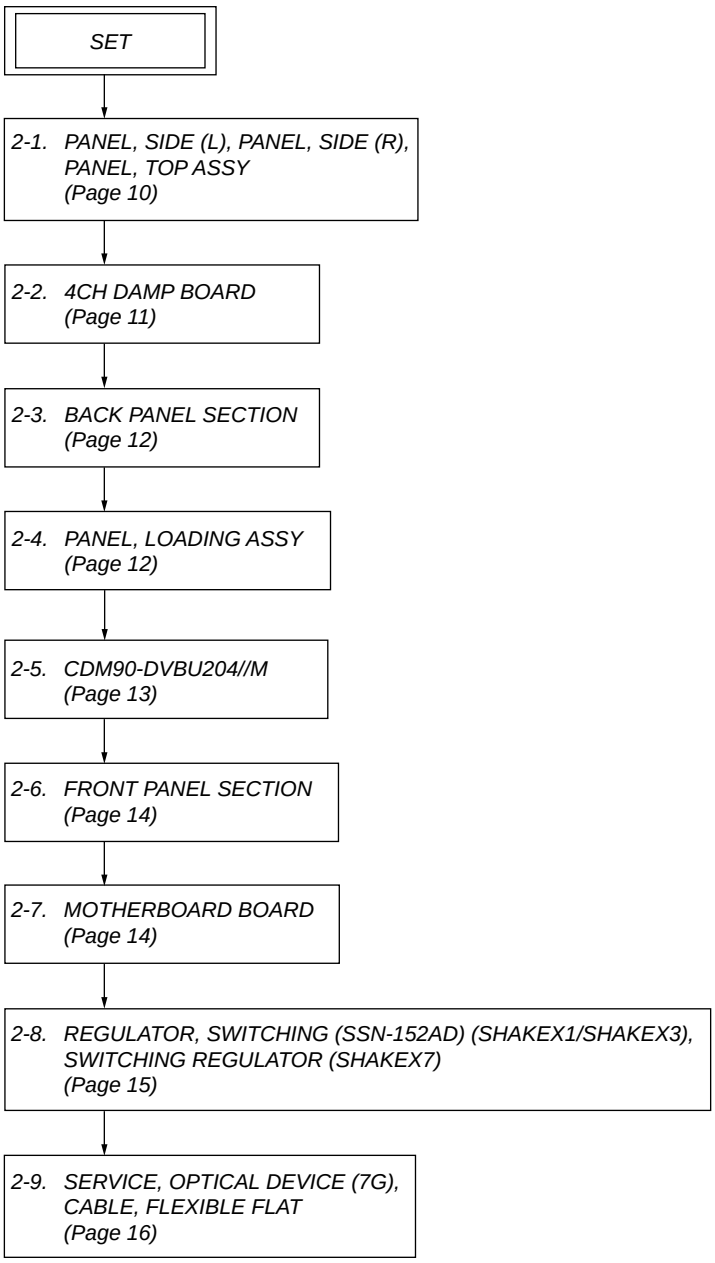

Note: Follow the disassembly procedure in the numerical order given.

2-1. PANEL, SIDE (L), PANEL, SIDE (R), PANEL, TOP ASSY

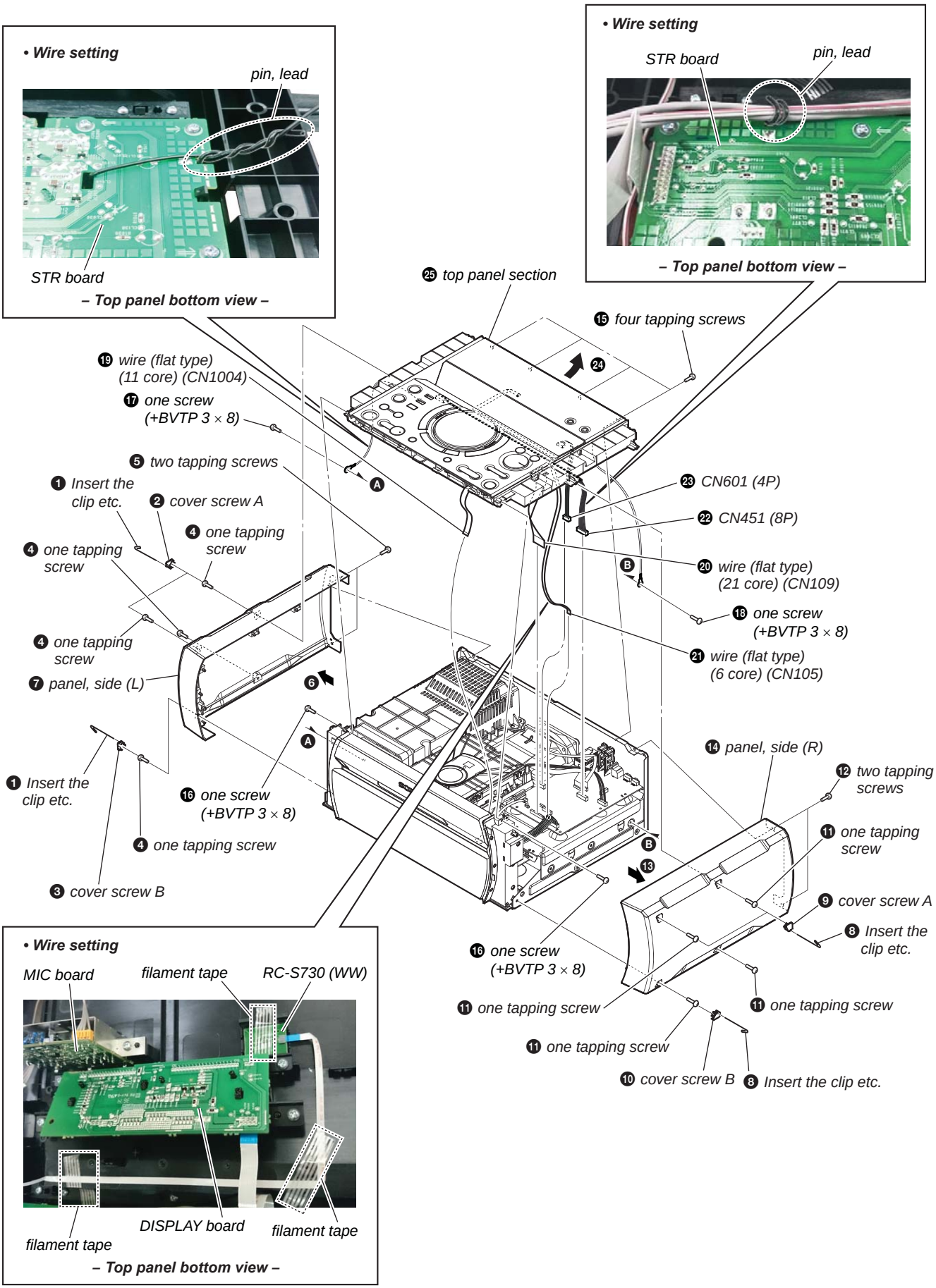

2-2. 4CH DAMP BOARD

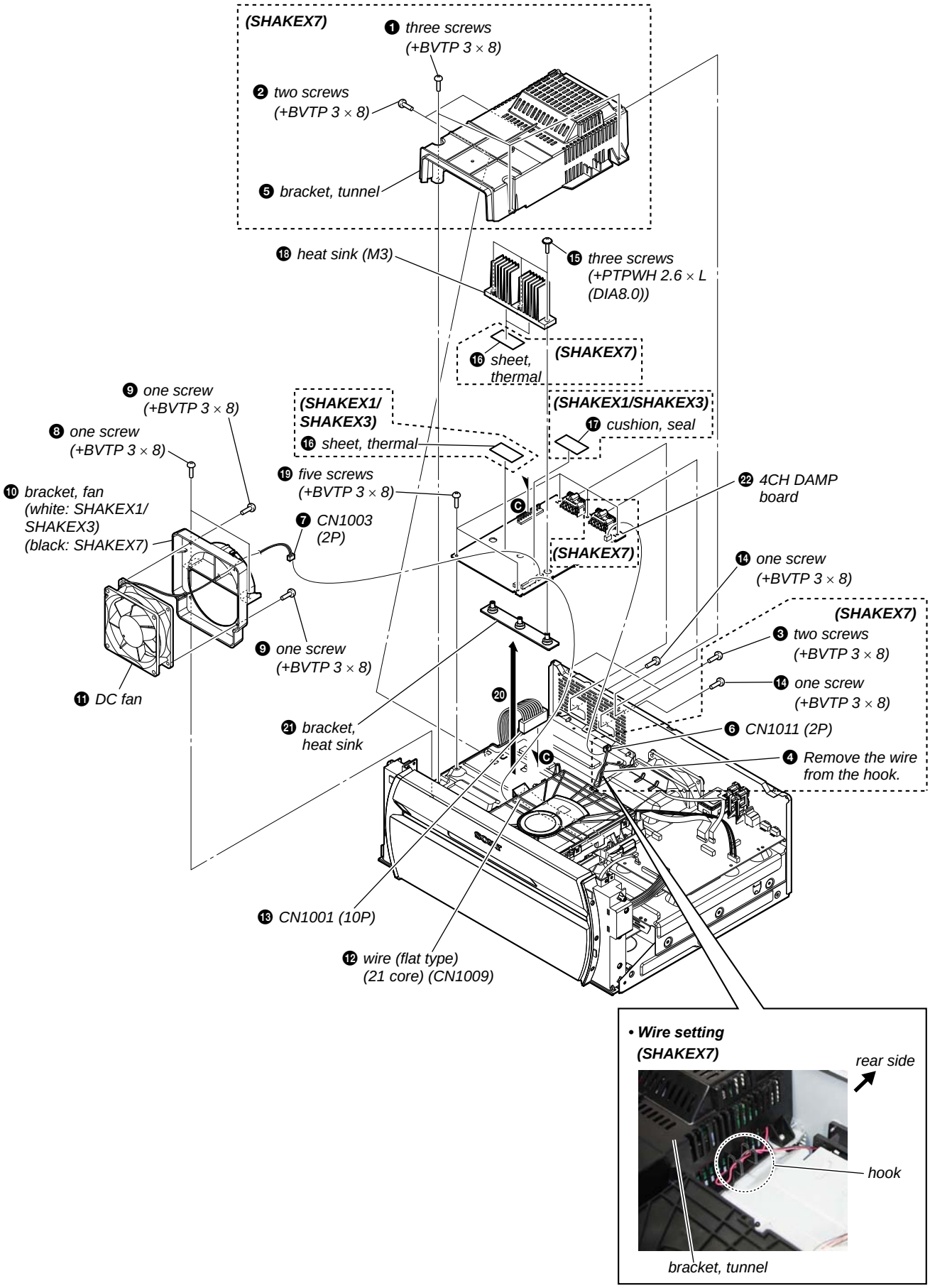

2-3. BACK PANEL SECTION

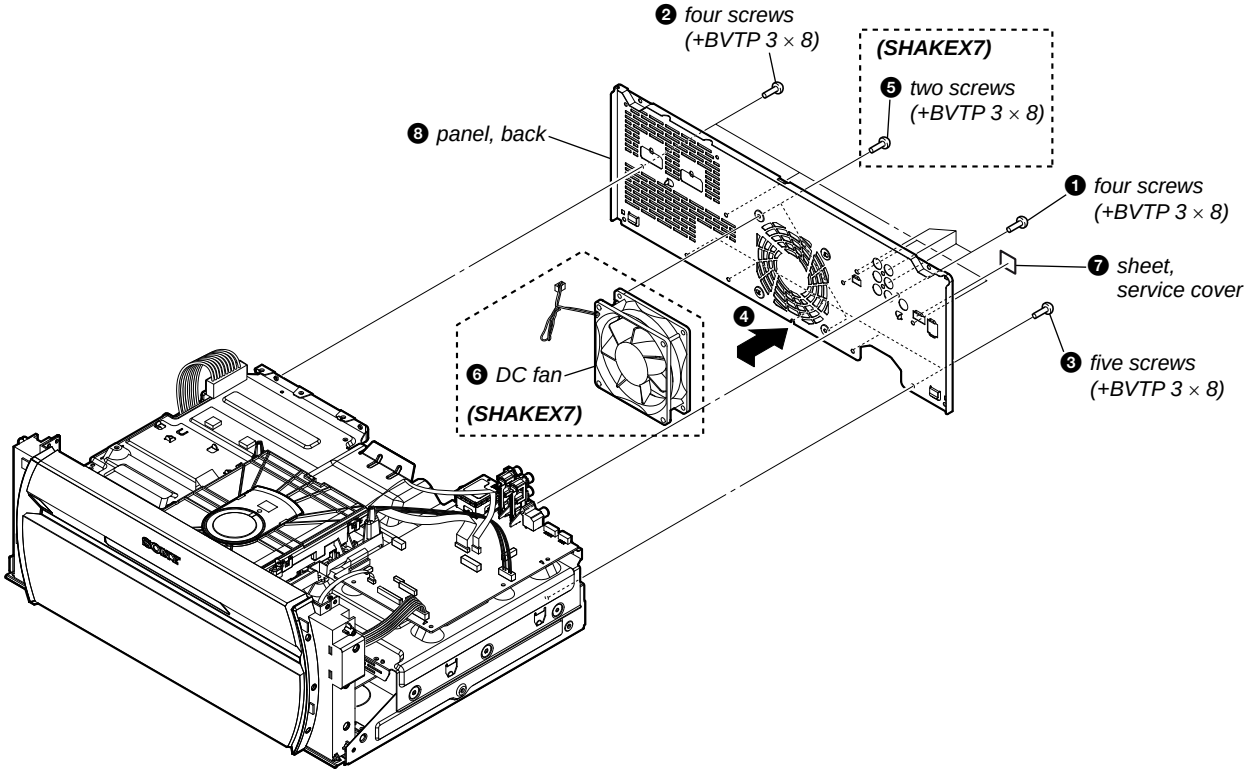

2-4. PANEL, LOADING ASSY

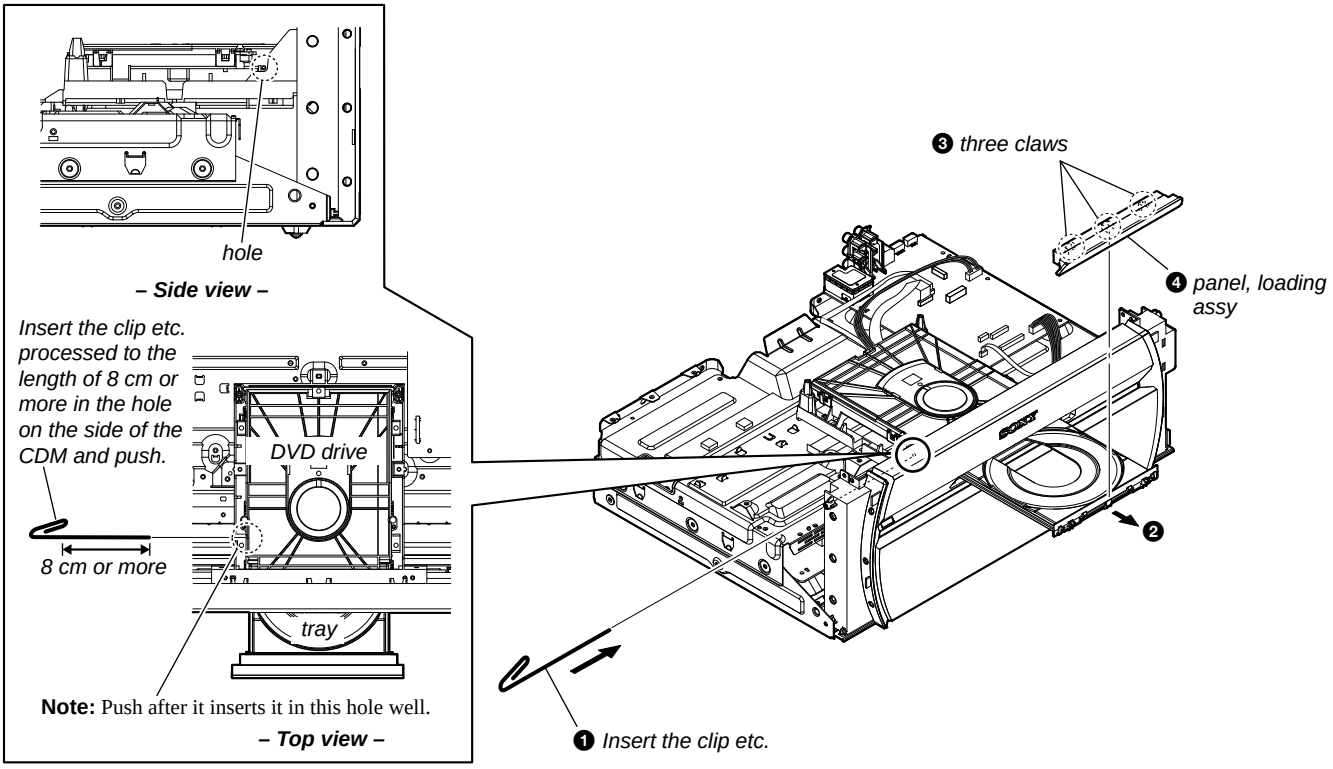

2-5. CDM90-DVBU204//M

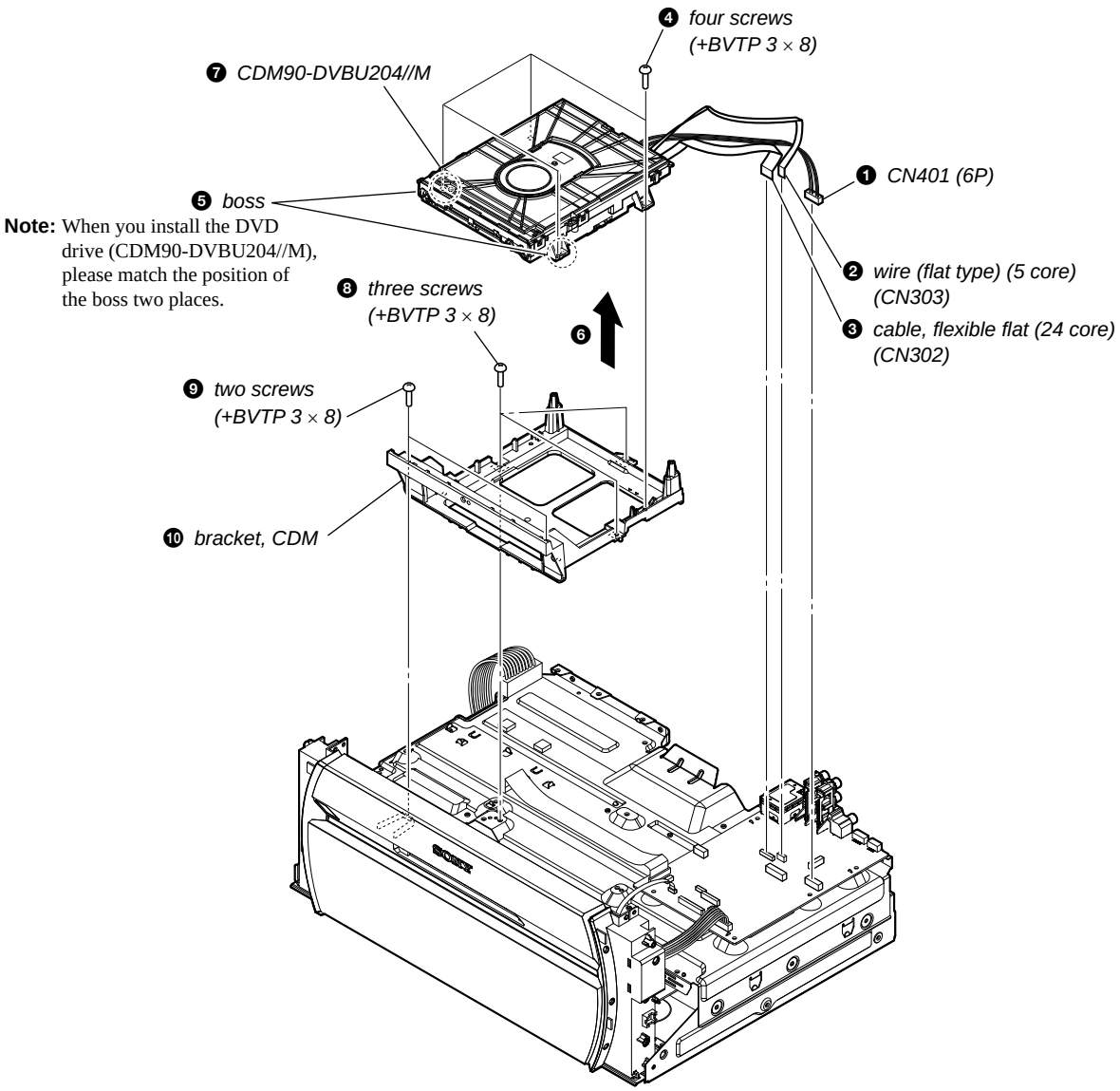

2-6. FRONT PANEL SECTION

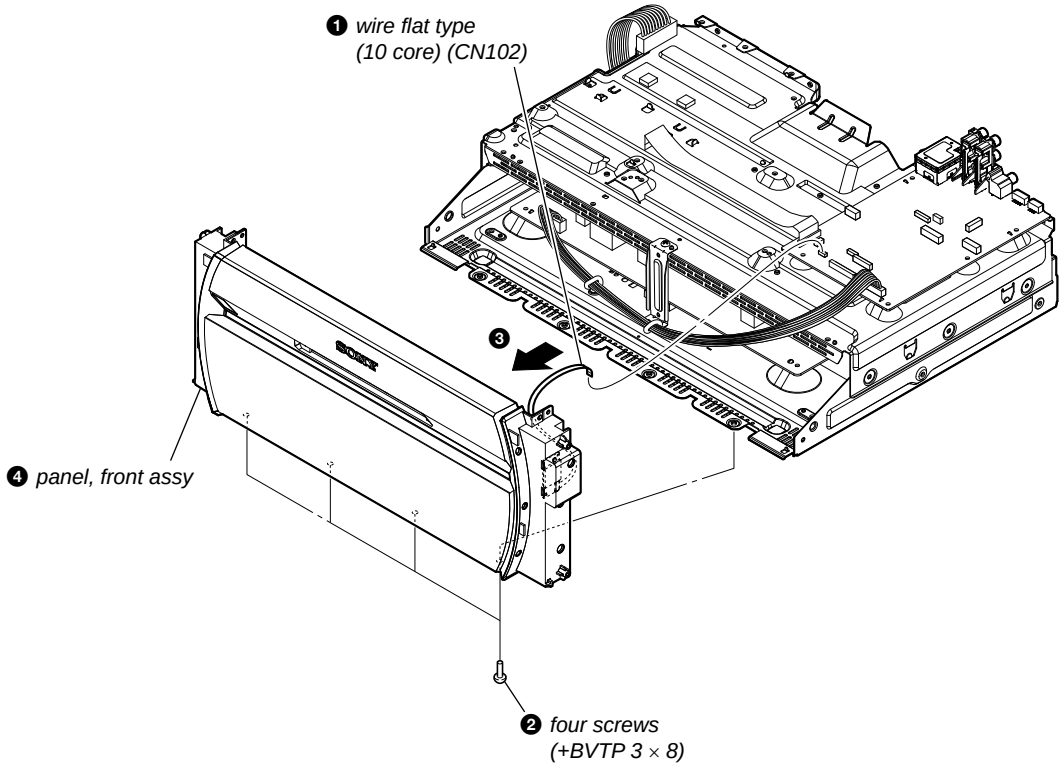

2-7. MOTHERBOARD BOARD

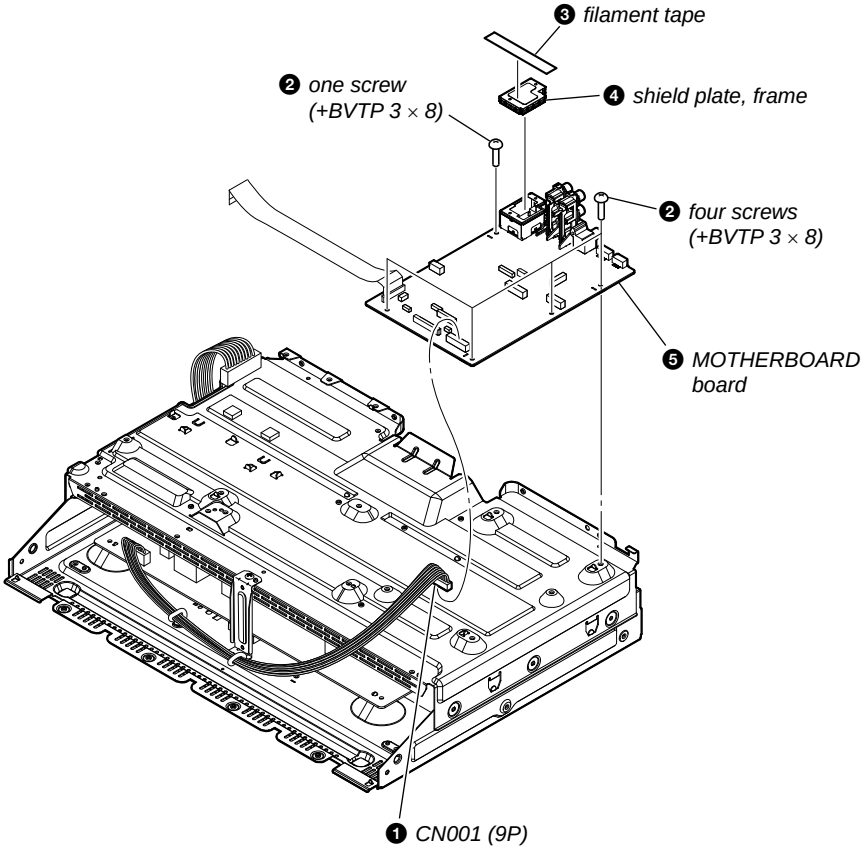

2-8. REGULATOR, SWITCHING (SSN-152AD) (SHAKEX1/SHAKEX3), SWITCHING REGULATOR (SHAKEX7)

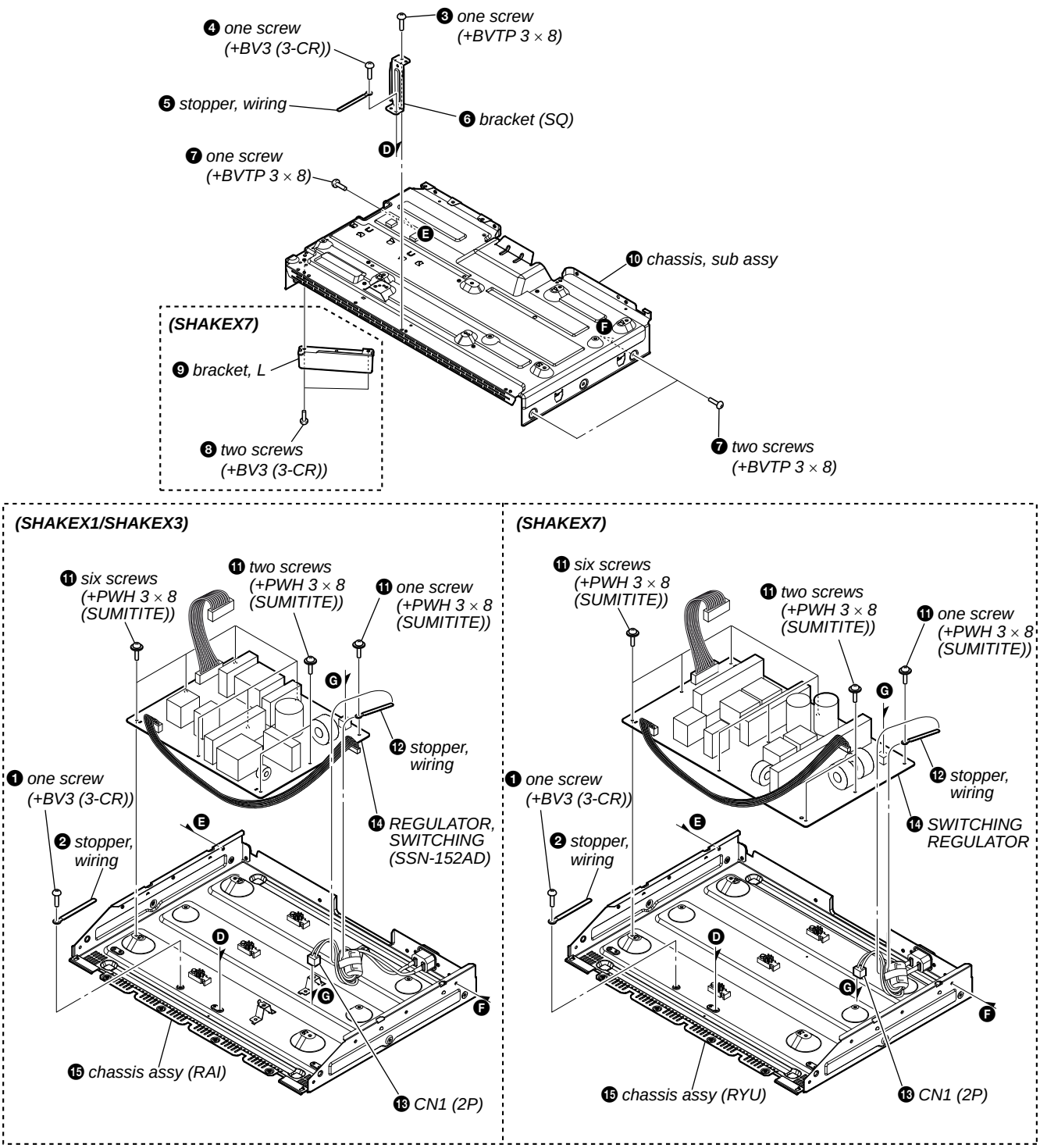

2-9. SERVICE, OPTICAL DEVICE (7G), CABLE, FLEXIBLE FLAT

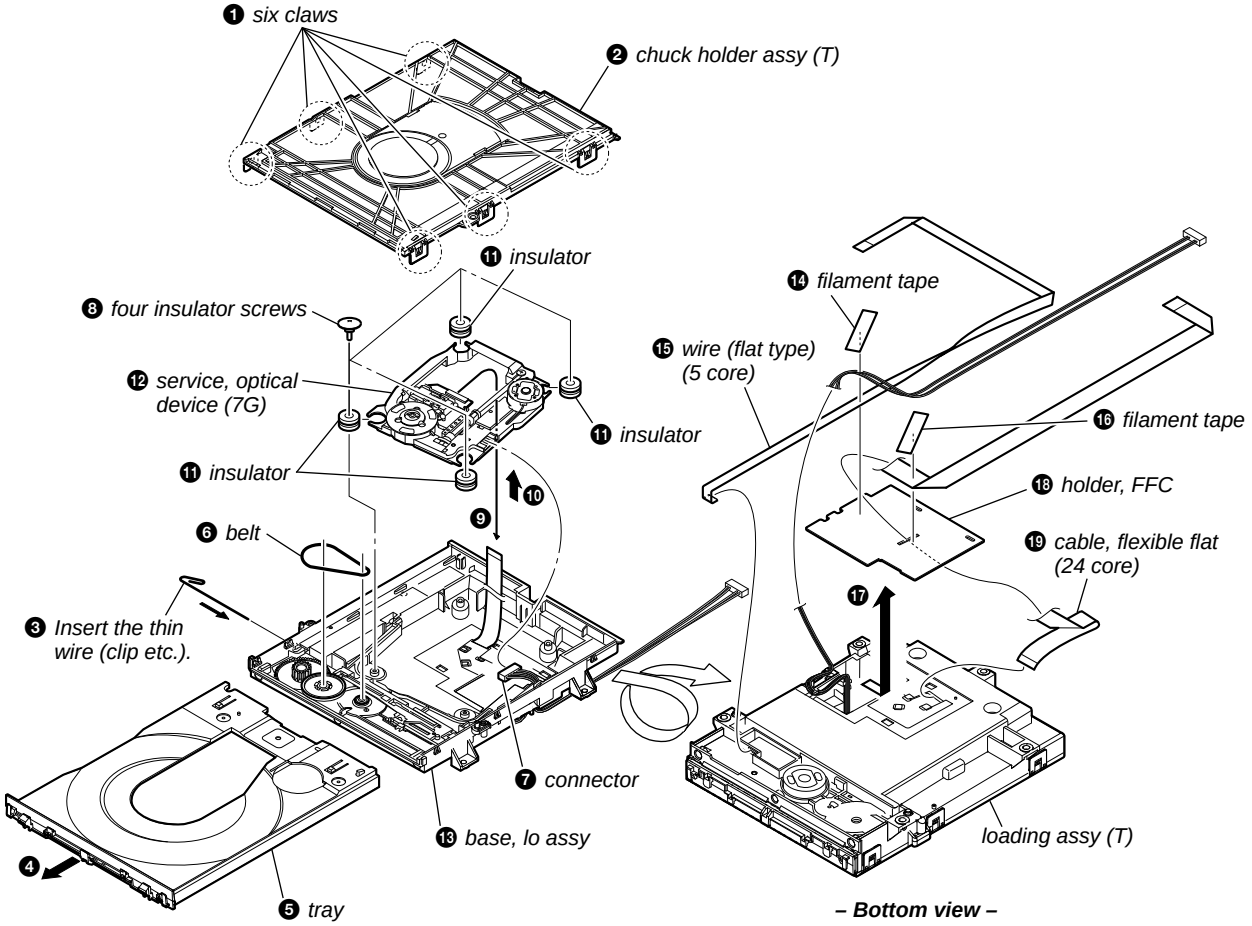

• ***Installation of cable, flexible flat (24 core) and wire (flat type) (5 core)***

Note: This illustration sees the loading assy (T) from bottom side.

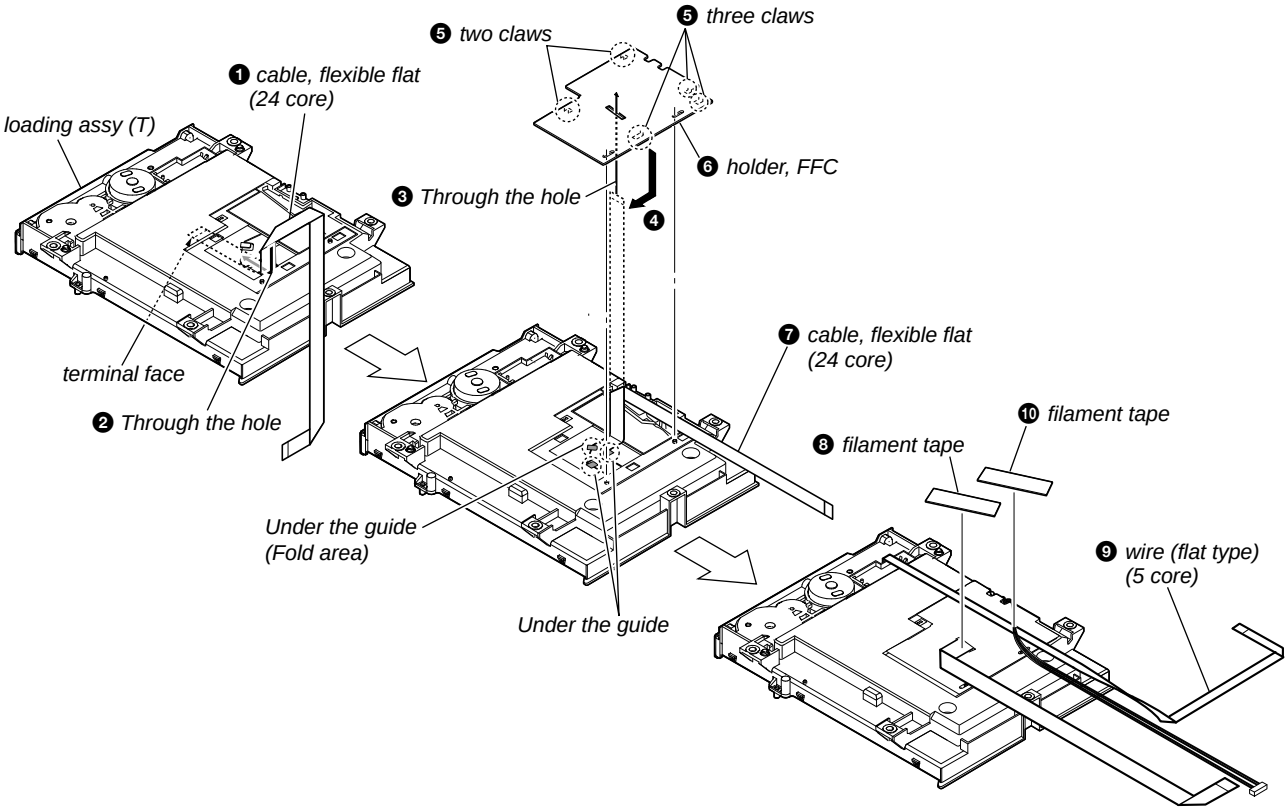

SECTION 3
TEST MODE

[PANEL TEST MODE]

This mode is used to check the fluorescent indicator tube, LEDs, keys, [VOLUME/MULTI CONTROL] knob, model, destination and software version.

Procedure:

1. Press [■] button and [S3 TUNING – ⏮] button simultaneously and hold 3 seconds.
2. All LEDs and segments in fluorescent indicator tube are lighted up. All RGB LEDs are lighted up in white color.
3. When you want to enter to the software version display mode, press [S2 🗀+] button.
   The model information appears on the fluorescent indicator tube.
   Press [S2 🗀+] button again to view the destination information.
4. During the destination information display, press [S2 🗀+] button. Each time [S2 🗀+] button is pressed, the fluorescent indicator tube shows the version of each category software in the following sequence: SC, MTK, OPU, UI, PF, SUB, SYS, CD, CMA, CMB, ST, TA, TM and return back to model information display.
5. When [■] button is pressed while the version numbers are being displayed except model and destination, the date of the software creation appears. When [■] button is pressed again, the display returns to the software version display.
6. Press [S1 🗀–] button, the key check mode is activated.
7. In the key check mode, the fluorescent indicator tube displays "K 0 V0".
   Each time a button is pressed, "K" value increases. However, once a button has been pressed, it is no longer taken into account.
   "V" value increases in the manner of 0, 1, 2, 3 ... if [VOLUME/MULTI CONTROL] knob is turned clockwise, or it decreases in the manner of 0, 9, 8, 7 ... if [VOLUME/MULTI CONTROL] knob is turned counterclockwise.
8. When [ENTER] button is pressed after all LEDs and segments in fluorescent indicator tube light up, alternate segments in fluorescent indicator tube and LEDs would light up, all RGB LEDs would light up in RED color. If you press [ENTER] button again, another half of alternate segments in fluorescent indicator tube and LEDs would light up, all RGB LEDs would light up in GREEN color. Pressing [ENTER] button again would cause all segments in fluorescent indicator tube and LEDs light up, all RGB LEDs would light up in blue color. Pressing [ENTER] button again would turn off all segments in fluorescent indicator tube and all LEDs including RGB LEDs.
9. To release from this mode, press the buttons in the same manner as step 1, or disconnect the power cord.

[USER RESET]

The user reset clears all data including preset data stored in the data flash to initial conditions exclude history mode data.

Procedure:

1. Press I/⏻ button to turn on the system.
2. Press [DJ OFF] button and [S4 TUNING + ⏭] button simultaneously for 3 seconds.
3. "RESET" appears on the fluorescent indicator tube. After that, the fluorescent indicator tube becomes blank for a while, and the system is reset.

[COLD RESET]

The cold reset clears all data including preset data stored in the data flash to initial conditions included history mode data. Execute this mode when returning the set to the customer.

Procedure:

1. Press [I/⏻] button to turn on the system.
2. Press [■] button and [S4 TUNING + ⏭] button simultaneously for 3 seconds.
3. "COLD RESET" appears on the fluorescent indicator tube. After that, the fluorescent indicator tube will display "SONY DEMO". The set will automatically Power ON and Power OFF again, and the system is reset.

[DISC TRAY LOCK MODE]

This mode let you lock the disc tray. When this mode is activated, the disc tray will not open when [⏏] button is pressed. The message "LOCKED" will be displayed on the fluorescent indicator tube. This mode only applied when there is disc on the tray.

Procedure:

1. Press [I/⏻] button to turn on the system.
2. Select DVD/CD function.
3. Press [DJ OFF] button and [ISOLATOR] button simultaneously and hold down until "LOCKED" or "UNLOCKED" displayed on the fluorescent indicator tube (around 5 seconds).

[Bluetooth PAIRING HISTORY CLEAR]

It can clear the Bluetooth pairing history.

Procedure:

1. Press the [I/⏻] button to turn the power on.
2. Press the [BLUETOOTH] button to turn the Bluetooth function.
3. Press [DJ OFF] button and [🗀–] button simultaneously for 3 seconds.
4. The message "BT HISTORY" → "CLEAR" is displayed on the fluorescent indicator tube, and the pairing history of Bluetooth is cleared.

[HISTORY MODE]

This mode is used to check important data stored in the system when PROTECTOR happen.

Procedure:

1. During demo mode, press [■] button and [S2 ⊟+] button for 5 seconds to mode into history mode.
2. Press the [S4 TUNING + ▶▶I] button or [S3 TUNING – I◀◀] button to check history data stored.

Display on fluorescent indicator tube								Description
P	C	O	U	N	T	※	※	No of time protector happen (0 ~ 99)
P	T			※	※	※	※	Refer to protect type description
1	*h	*h	*h	*h	*h.	*m	*m	Single Power On Time until protector happened (0~99999 hours, 0~99Min)
2	*h	*h	*h	*h	*h.	*m	*m	Total Power On Time [no consider protector happen] (0~99999 hours, 0~99Min)
F		※	※	※	※	※	※	Input Function during protector happened
V	O	L			※	※	※	Volume setting (MIN / 1 - 50 / MAX)
B	A	S	S		※	※	※	MEGA BASS setting (OFF / ON)

To release from History Mode.
To release from this mode, press [I/⏻] button.

Protect Type Description:

Error Code	Description
01	The over current condition to MOSFET occurs by defect of MOSFET or defect of PS output line. or Unusual heat up of MOSFET by improper assembly of heat sink, destruction of MOSFET etc.
02	Defect of thermistor IC or charging circuit used by SPM (Sound Pressure Management) system.
03	Defect of power supply circuit to AMP. There is possibility of unusual power supply of any of the AMP IC or Pre-amplifier.
04	DC appears in SP terminal by defect of AMP IC and MOSFET
06	Defect of DC FAN and DC FAN driver circuit

If speaker does not have output even if the set status is not in PROTECT mode, the following defect might be possible:

Defects	Possible cause
RESET defect	Reset signal status from micom is not ‘H’.

[DVD COLOR SYSTEM MODE]

- This mode let you change the color system of the video output from PAL to NTSC or vice-versa.

Procedure:

1. Press the [I/⏻] button to turn on the system.
2. Press [FUNCTION +] or [FUNCTION –] at remote commander to select DVD/CD function.
3. Press the [DJ OFF] button and [FOOTBALL] button simultaneously and hold for 3 seconds.
4. The message "COLOR PAL" or "COLOR NTSC" appears on the fluorescent indicator tube.

- **To release from DVD Color System Mode**

1. Once the color system has been selected, the mode is fixed there after. If you wish to change the mode again, perform the above item 2 again.

[DVD SERVICE MODE]

- This mode let you make diagnosis and adjustment easily by using the remote commander and the TV. The instructions, diagnostic results, etc. are given on the on-screen display.

- **TEST DISC LIST**

  Be sure to use the DVD disc that matches the signal standards of your region.

  - CD

    YEDS-18 (Part No.: 3-702-101-01)
    PATD-012 (Part No.: 4-225-203-01)
    HLX-A1 (Part No.: J-2501-307-A)

  - DVD SL (Single Layer)

    NTSC : HLX-503 (Part No.: J-6090-069-A)
    HLX-504 (Part No.: J-6090-088-A)
    HLX-513 (Part No.: J-2501-305-A)
    PAL : HLX-506 (Part No.: J-6090-077-A)

  - DVD DL (Double Layer)

    NTSC : HLX-501 (Part No.: J-6090-071-A)
    HLX-505 (Part No.: J-6090-089-A)
    HLX-514 (Part No.: J-2501-306-A)
    PAL : HLX-507 (Part No.: J-6090-078-A)

- **Procedure to enter to DVD Service Mode:**

1. Press the [I/⏻] button to turn on the system.
2. Press [FUNCTION +] or [FUNCTION –] at remote commander to select DVD/CD function.
3. Press the [SPEAKER LIGHT] button and [ENTER] button simultaneously and hold 3 seconds.
4. The message "SERVICE IN" appears on the fluorescent indicator tube.
   The display of the "Model Name" of the "Remocon Diagnosis Menu" change with the model and the destination appears on screen display. Refer to below on the model name.
   SHAKE-X1D : TETSUJIN
   SHAKE-X3D : RAIJIN
   SHAKE-X7D : RYUJIN

```
        Remocon Diagnosis Menu

0. External Chip Check
1. Servo Parameter Check
2. Drive Manual Operation
3. Emergency History
4. Version Information

Model Name  : SHAKE-X1D_XX*1 or SHAKE-X3D_XX*1 or
            : SHAKE-X7D_XX*1
IF-con      : Ver.  XX.XX (XXXX)
Syscon      : Ver.  X.XXX
```

*1: Changes depending on destination

5. To execute each function, press its number by using numeric button on the remote commander.
6. To release from this mode, press the [I/⏻] button to turn off the system.

- **Execute IOP Measurement**

  In order to execute IOP measurement, the following standard procedures must be followed.

1. From the Top Menu of Remocon Diagnosis Menu, select "2. Drive Manual Operation" by pressing the [2] button on the remote commander. The following screen appears on the onscreen display.

```
        Drive Manual Operation

1. Servo Control
2. Track/Layer Jump
3. Manual Adjustment
4. Tray Aging Mode
5. MIRR time Adjust
0. Return to Top Menu
```

2. Select "3. Manual Adjustment" by pressing the [3] button on the remote commander. The following screen appears on the on-screen display.

```
        Manual Adjust

1. Track Balance Adjust:
2. Track Gain Adjust:
3. Focus Balance Adjust:
4. Focus Gain Adjust:
5. Eq Boost Adjust:
6. Iop:
7. TRV. Level:
8. S curve (FE) Level:
9. RFL (PI) Level:
0. MIRR Time:

↑↓ Change Value
RETURN Return to previous menu
```

3. Select "6. Iop:" by pressing the [6] button on the remote commander.
4. Wait until a hexadecimal number appears in the on-screen display as below:

```
        Manual Adjust

1. Track Balance Adjust:
2. Track Gain Adjust:
3. Focus Balance Adjust:
4. Focus Gain Adjust:
5. Eq Boost Adjust:
6. Iop. ED
7. TRV. Level:
8. S curve (FE) Level:
9. RFL (PI) Level:
0. MIRR Time:

↑↓ Change Value
RETURN Return to previous menu
```

5. Convert data from hexadecimal to decimal by using conversion table.
6. Please find the label on the rear of the BU (Base Unit).
   The default IOP value is written in the label.
7. Subtract between these two values.

8. If the remainder is smaller than 93 (decimal), then it is OK. However if the value is higher than 93, then the BU is defective and need to be change.
9. Press the [RETURN] button on the remote commander to return to previous menu.
10. Press the [0] button on the remote commander to return to the Top Menu of Remocon Diagnosis Menu.
11. Press the [I/⏻] button to turn off the system.

- **Check Emergency History**
  To check the emergency history, please follow the following procedure.

1. From the Top Menu of Remocon Diagnosis Menu, select "3. Emergency History" by pressing the [3] button on the remote commander. The following screen appears on the on-screen display.

```
                Emg. History Check

Laser Hours        CD      999h        59min
                   DVD     999h        59min

1.  01  05  04  04         00  92  46  00
    00  00  00  00         00  00  23  45
2.  02  02  01  01         00  A9  4B  00
    00  00  00  00         00  00  23  45

Next  Next Page    Prev  Prev Page
O  Return to Top Menu
```

(Displayed values in the above figure are example)

2. You can check the total time when the laser is turned on during playback of DVD and CD from the above menu. The maximum time, which can be displayed are 999h 59min.
3. You can check the error code of latest 10 emergency history from the above menu. To view the previous or next page of emergency history, press the [⏮] button or [⏭] button on the remote commander. The error code consists of "Error Code", "Parameter of error code" and "Time of error code".

- **Error Code**

```
                Example of Error code

1.  01  05  04  04         00  92  46  00
    00  00  00  00         00  00  23  45
```

The meaning of error code is as below:
01: Communication error (No reply from syscon)
02: Syscon hung up
03: Power OFF request when syscon hung up
19: Thermal shutdown
24: MoveSledHome error
25: Mechanical move error (5 Changer)
26: Mechanical move stack error
30: DC motor adjustment error
31: DPD offset adjustment error
32: TE balance adjustment error
33: TE sensor adjustment error
34: TE loop gain adjustment error
35: FE loop gain adjustment error
36: Bad jitter after adjustment
40: Focus NG
42: Focus layer jump NG
51: Spindle stop error
52: Open kick spindle error
60: Focus on error
61: Seek fail error
62: Read Q data/ID error
70: Lead in data read fail
71: TOC read time out (CD)
80: Can't buffering
81: Unknown media type

- **Parameter of error code**
  This is the detail of error code.

```
                Example of Error code

1.  01  05  04  04         00  92  46  00
    00  00  00  00         00  00  23  45
```

- **Time of error code**
  This is the laser time when an error occurred.

```
                Example of Error code

1.  01  05  04  04         00  92  46  00
    00  00  00  00         00  00  23  45
```

To clear the Laser Hours
Press the [▭ DISPLAY] button and then press the [CLEAR] button. The data for both CD and DVD data are reset.

```
                Emg. History Check

Laser Hours        CD      0h          0min
                   DVD     0h          0min

1.  01  05  04  04         00  92  46  00
    00  00  00  00         00  00  23  45
2.  02  02  01  01         00  A9  4B  00
    00  00  00  00         00  00  23  45

Next  Next Page    Prev  Prev Page
O  Return to Top Menu
```

To clear the Emergency History

Press the [DVD TOP MENU] button and then press the [CLEAR] button.
The error code for all emergency history would be reset.

```
                Emg. History Check

Laser Hours        CD     999h        59min
                   DVD    999h        59min

1.  00  00  00  00        00  00  00  00
    00  00  00  00        00  00  00  00
2.  00  00  00  00        00  00  00  00
    00  00  00  00        00  00  00  00

[Next] Next Page   [Prev] Prev Page
[O] Return to Top Menu
```

To clear the Initialize Setup Data

Press the [DVD/TUNER MENU] button and then press the [CLEAR] button on the remote commander.

```
                Emg. History Check

Laser Hours        CD     999h        59min
                   DVD    999h        59min

Initialize setup data...



[Next] Next Page   [Prev] Prev Page
[O] Return to Top Menu
```

To return to the Top Menu of Remocon Diagnosis Menu

Press the [0] button on the remote commander.

- **Check Version Information**
  To check the version information, please follow the following procedure.

1. From the Top Menu of Remocon Diagnosis Menu, select “4. Version information” by pressing the [4] button on the remote commander. The following screen appears on the on-screen display.

```
                Version information

Firm (Main) :  Ver. xxxxx
Firm (Sub) :  xxxxx
RISC :   xxxxx
8032 :   xxxxx
Audio DSP :  xxxxx
Servo DSP :  xxxxx


[O] Return to Top Menu
```

   To return to the Top Menu of Remocon Diagnosis Menu, press the [0] button on the remote commander.

SECTION 4
ELECTRICAL CHECK

TUNER SECTION

0 dB = 1 μV

FM AUTO STOP CHECK

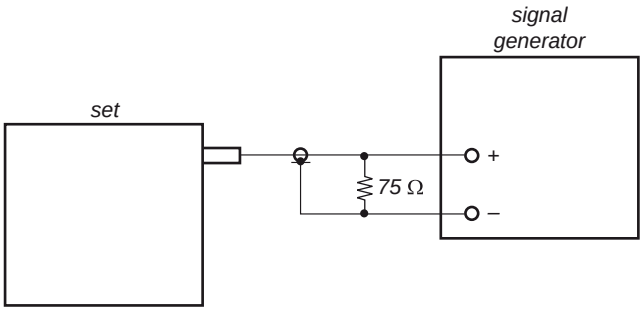

Procedure:

1. Turn the power on.
2. Input the following signal from Signal Generator to FM antenna input directly.

Carrier frequency : A = 87.5 MHz, B = 98 MHz, C = 108 MHz
Deviation : 75 kHz
Modulation : 1 kHz
ANT input : 35 dBu (EMF)

Note: Please use 75 ohm "coaxial cable" to connect SG and the set. You cannot use video cable for checking.
Please use SG whose output impedance is 75 ohm.

3. Set to FM tuner function and scan the input FM signal with automatic scanning.
4. Confirm that input Frequency of A, B and C detected and automatic scanning stops.

The stop of automatic scanning means "The station signal is received in good condition".

CD/DVD SECTION

[TEST DISC LIST]

Use the following test disc on test mode.

- CD: YEDS-18 (PART No. 3-702-101-01)
  or
  PATD-012 (PART No. 4-225-203-01)
  HLX-A1 (PART No. J-2501-307-A)
- DVD (SL)
  NTSC HLX-503 (PART No. J-6090-069-A)
  or
  HLX-504 (PART No. J-6090-088-A)
  HLX-513 (PART No. J-2501-305-A)
  PAL HLX-506 (PART No. J-6090-077-A)
- DVD (DL)
  NTSC HLX-501 (PART No. J-6090-071-A)
  or
  HLX-505 (PART No. J-6090-089-A)
  HLX-514 (PART No. J-2501-306-A)
  PAL HLX-507 (PART No. J-6090-078-A)

Note: When the BASE UNIT is replaced, perform the Execute IOP measurement
(Refer to page 19).

FOCUS BIAS CHECK

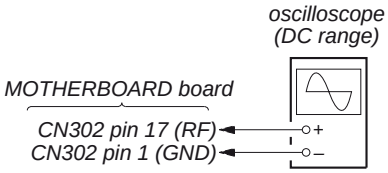

Procedure:

1. Connect the oscilloscope to CN302 pin 17 (RF) and CN302 pin 1 (GND) on the MOTHERBOARD board.
2. Press the [I/⏻] button to turn the power on, and select DVD/CD function.
3. Set the test disc (CD: YEDS-18), (DVD: HLX-503 (NTSC) or HLX-504 (PAL) on the tray and press [►] button to playback.
4. Confirm that oscilloscope waveform is as shown in the figure below (eye pattern).
   A good eye pattern means that the diamond shape (◊) in the center of the waveform can be clearly distinguished.

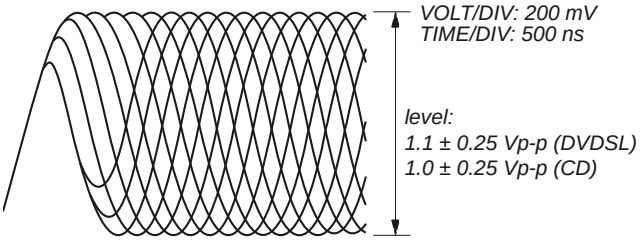

Checking Location:
-MOTHERBOARD Board (COMPONENT SIDE)-

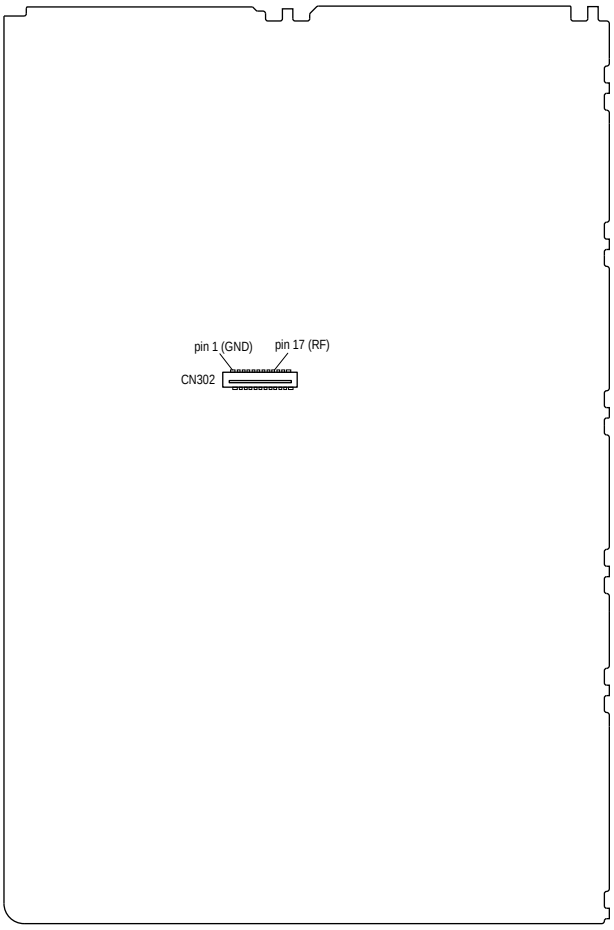

Switching Regulator Diagnosis Flow (HCD-SHAKEX1/SHAKEX3)

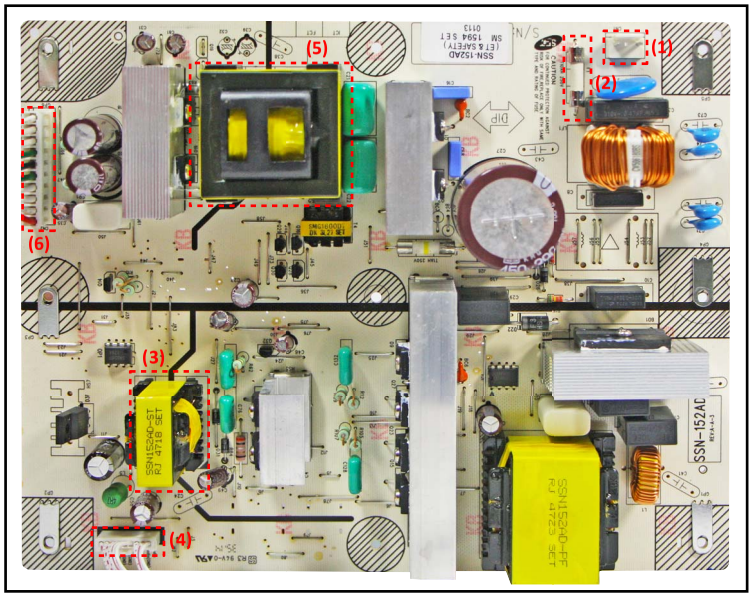

(1) AC input
(2) Fuse
(3) Sub Power transformer
(4) CN 4 Connector
pin1: Audio (13.5V)
pin2: Audio (GND)
pin3-4: LED (13.5V)
pin5-6: LED (GND)
pin7: AC-Det
pin8: PCON
pin9: LOW AC
(5) MAIN Power transformer
(6) CN 2 Connector
pin1: SPV (DC-45.5V)
pin2-4: -PVDD (DC-62.5V)
pin5: -VL (DC-25.5V)
pin6: GND
pin7: +VL (DC+25.5V)
pin8-10: +PVDD (DC+62.5V)

AC IN

The Power Control signal to Switching regulator is checked.
Is following power voltage OK?

	Standby	Demo mode	Power On
Main on/Sub on CN 4 :pin8	Low (0V)	Low (0V)	Hi (3.3V)

No → Check whether the state of the Cable and Outlet are normal. If there are no problems, check circumference circuit for Main on/Sub on Output of the Motherboard mount side.

Yes ↓

The Output from Switching regulator is checked.
Is following power voltage up to standard?

		Standby	Demo mode	Power On
CN4	pin1	13.5V±0.5V	13.5V±0.5V	13.5V±0.5V
CN2	pin2-4	0V	0V	-62.5V±5%
	pin5	0V	0V	-25.5V±5%
	pin7	0V	0V	+25.5V±5%
	pin8-10	0V	0V	+62.5V±5%
	pin1	0V	0V	-45.5V±10%

No → Replaces Switching regulator if it is not up to standard.

Yes ↓

END

Switching Regulator Diagnosis Flow (HCD-SHAKEX7)

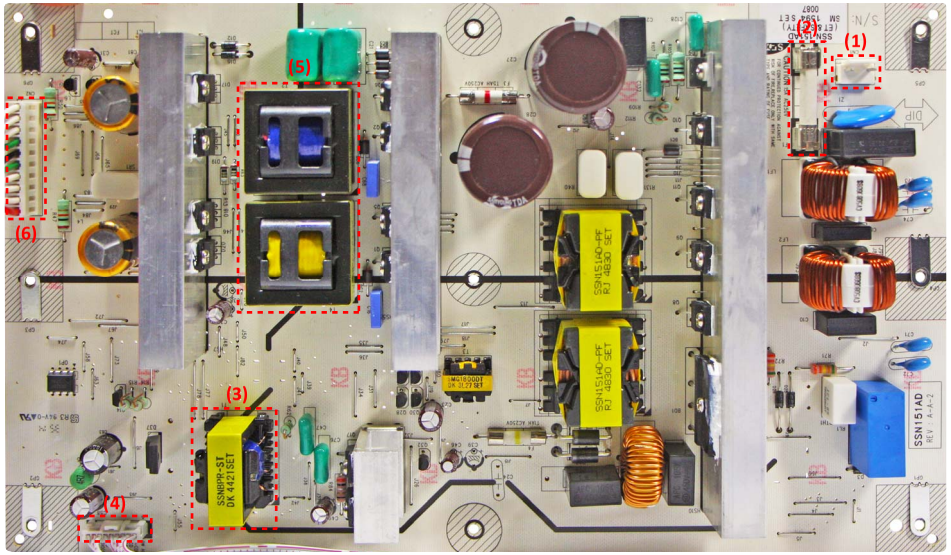

(1) AC input
(2) Fuse
(3) Sub Power transformer
(4) CN 4 Connector
pin1: Audio (13.5V)
pin2: Audio (GND)
pin3-4: LED (13.5V)
pin5-6: LED (GND)
pin7: AC-Det
pin8: PCON
pin9: LOW AC
(5) MAIN Power transformer
(6) CN 2 Connector
pin1: SPV (DC-45.5V)
pin2-4: -PVDD (DC-62.5V)
pin5: -VL (DC-24V)
pin6: GND
pin7: +VL (DC+24V)
pin8-10: +PVDD (DC+62.5V)

AC IN

The Power Control signal to Switching regulator is checked.
Is following power voltage OK?

Main on/Sub on CN 4 :pin8	Standby Low (0V)	Demo mode Low (0V)	Power On Hi (3.3V)

No → Check whether the state of the Cable and Outlet are normal. If there are no problems, check circumference circuit for Main on/Sub on Output of the Motherboard mount side.

Yes ↓

The Output from Switching regulator is checked.
Is following power voltage up to standard?

		Standby	Demo mode	Power On
CN4	pin1	13.5V±0.5V	13.5V±0.5V	13.5V±0.5V
CN2	pin2-4	0V	0V	-62.5V±5%
	pin5	0V	0V	-24V±5%
	pin7	0V	0V	+24V±5%
	pin8-10	0V	0V	+62.5V±5%
	pin1	0V	0V	-45.5V±10%

No → Replaces Switching regulator if it is not up to standard.

Yes ↓

END

Optical Block Diagnosis Flow (1/2)

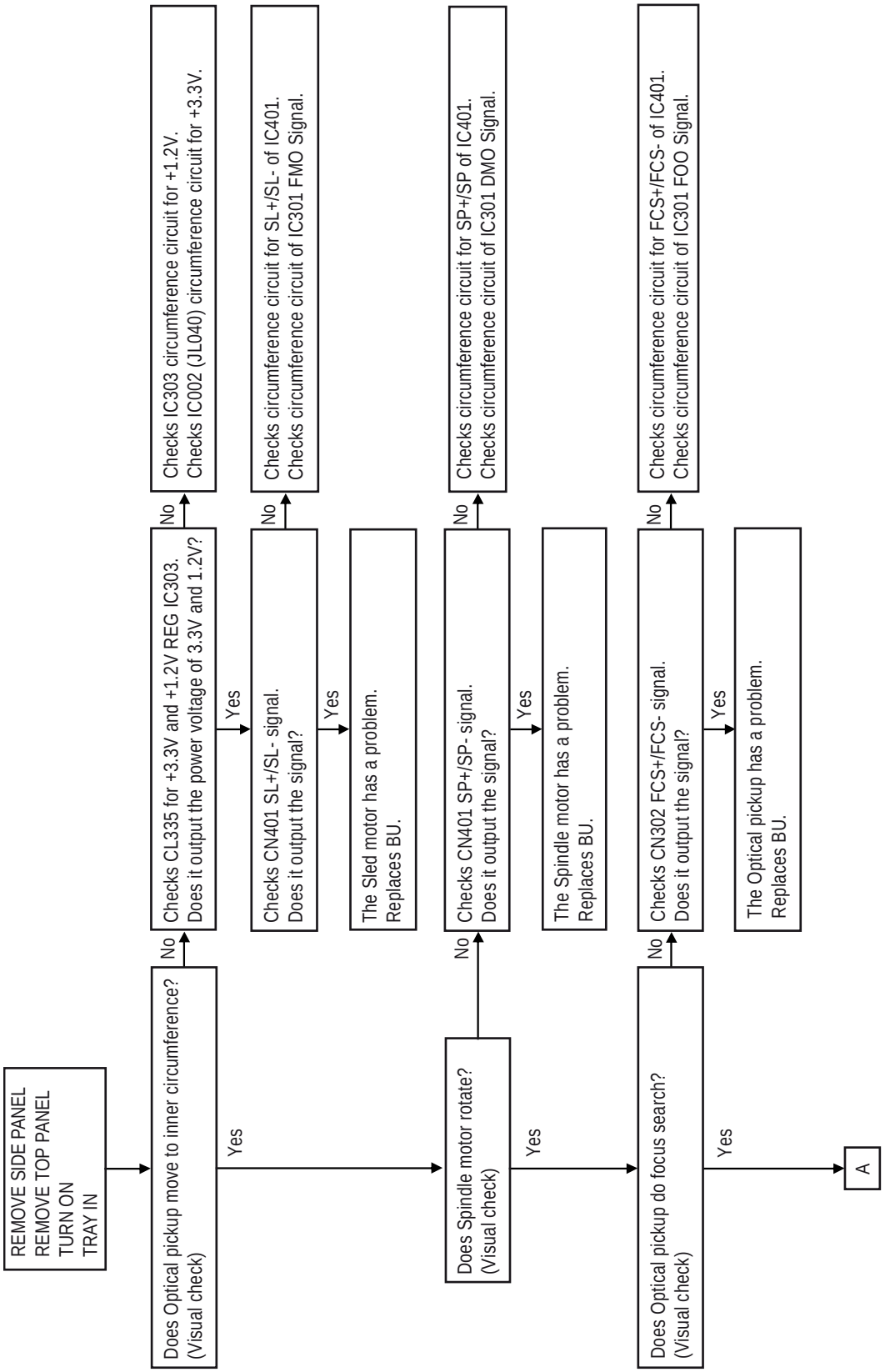

Optical Block Diagnosis Flow (2/2)

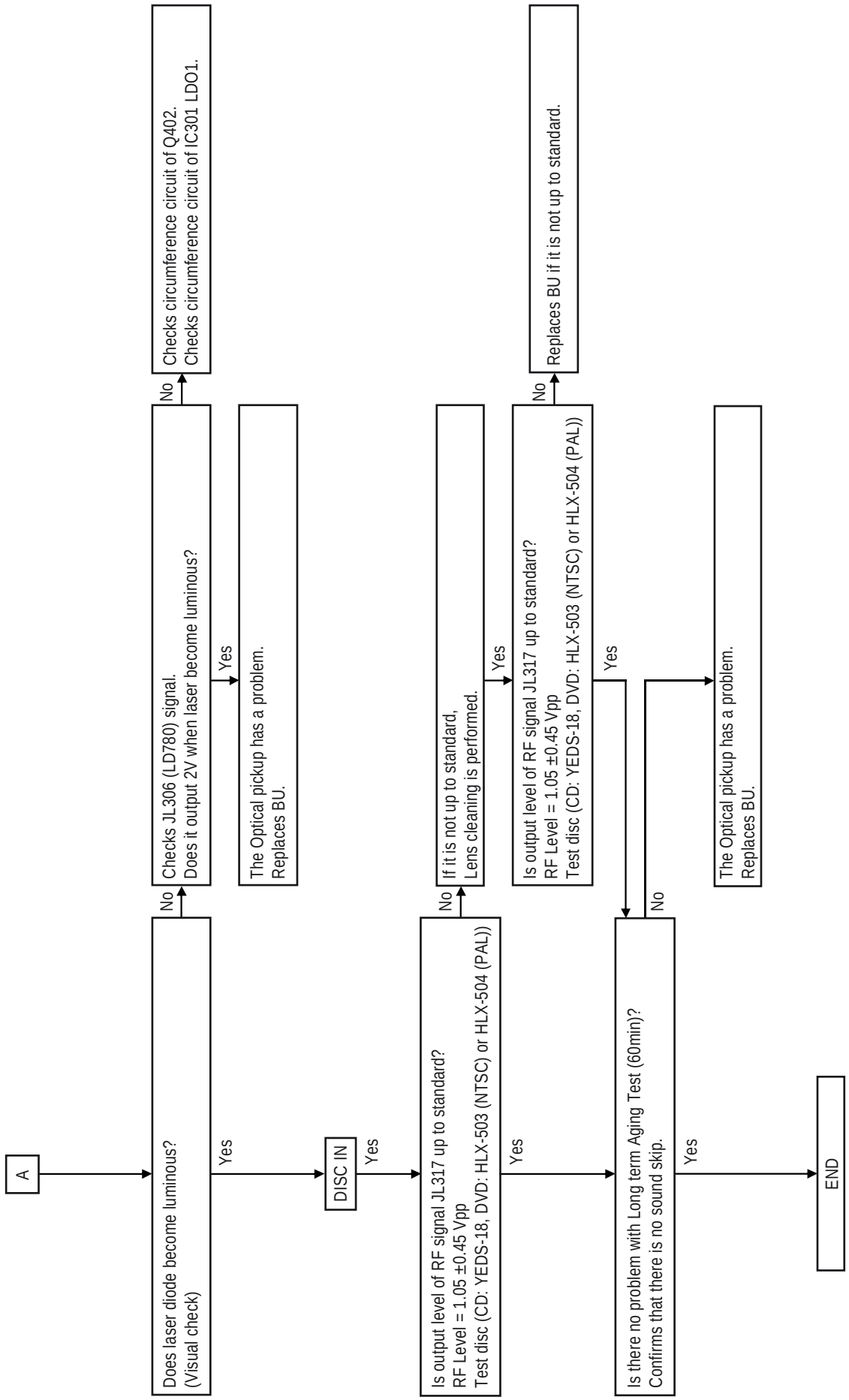

4CH DAMP / MOTHERBOARD Mount Diagnosis Flow (1/2)

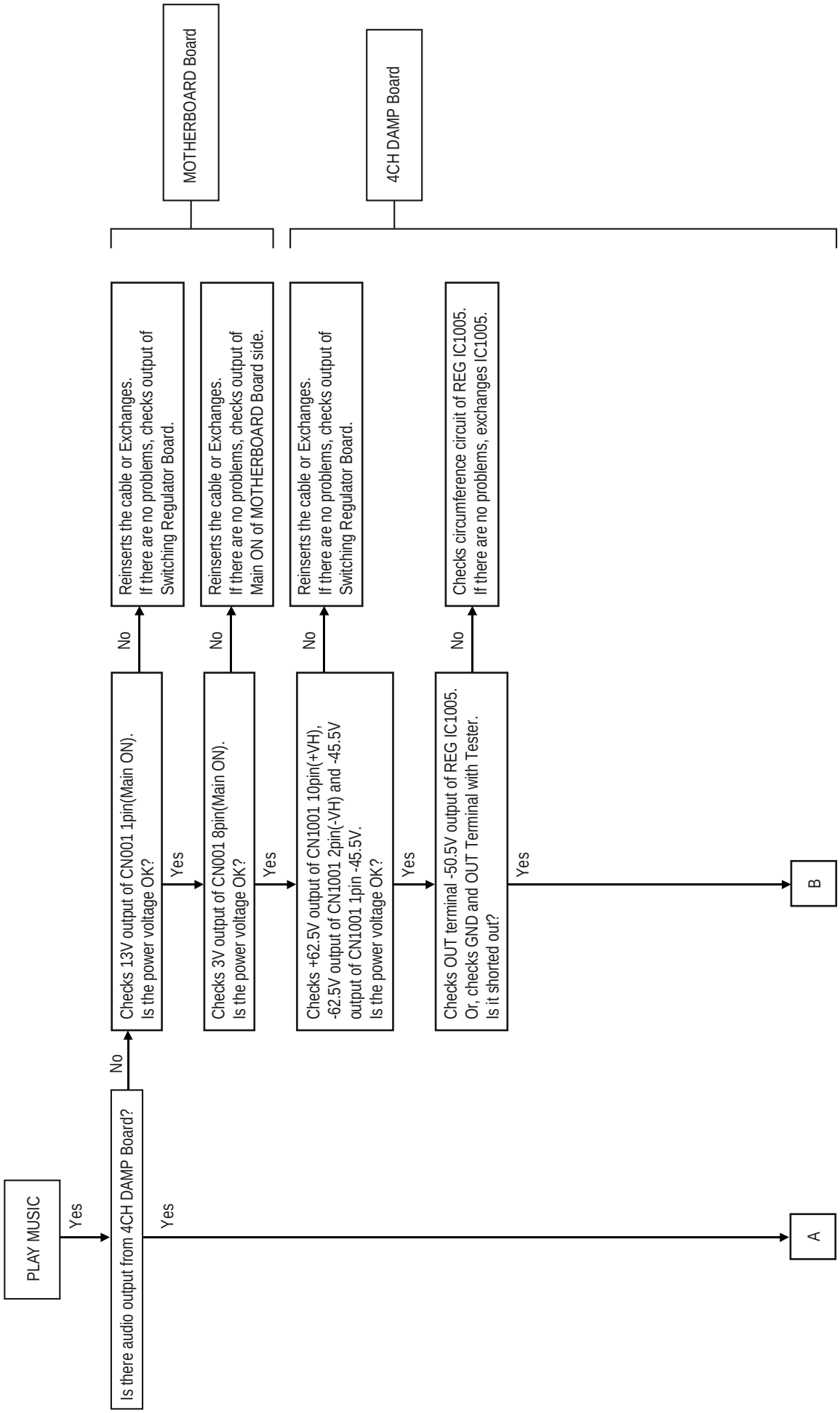

4CH DAMP / MOTHERBOARD Mount Diagnosis Flow (2/2)

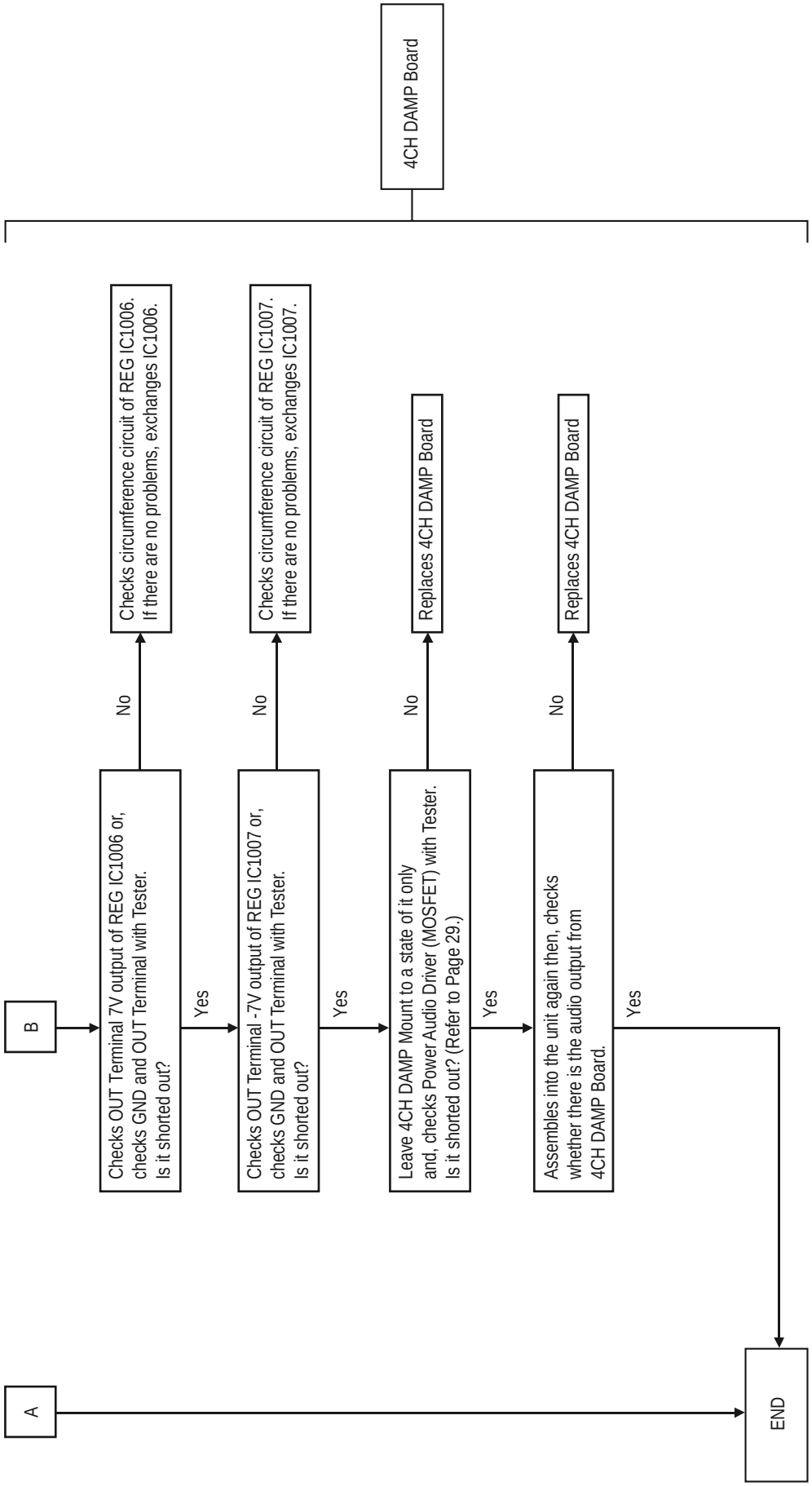

MOSFET Confirmation for 4CH DAMP Mount

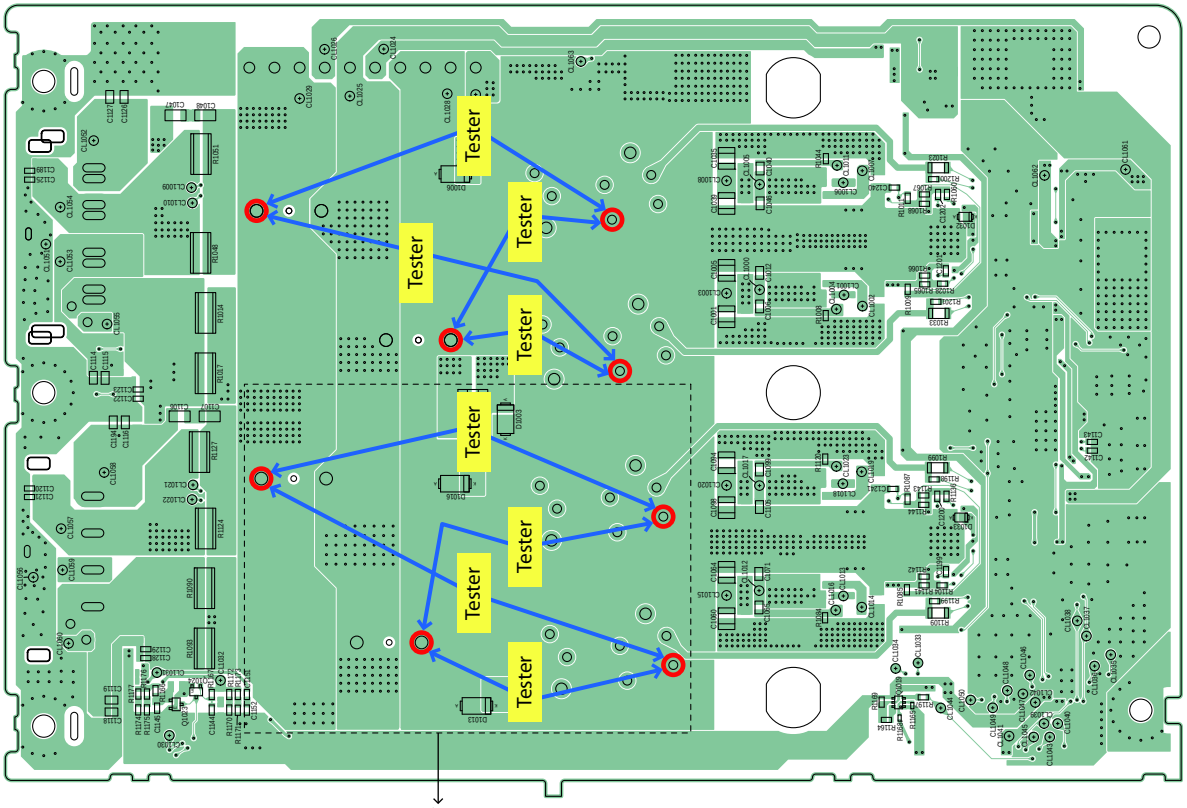

<Note>
Please check each channel's resistance value for the Coil's terminal and Capacitor's + and – terminal.
These terminal is equal to resistance value for POWER AUDIO DRIVER terminal.

SECTION 6
DIAGRAMS

• Circuit Boards Location

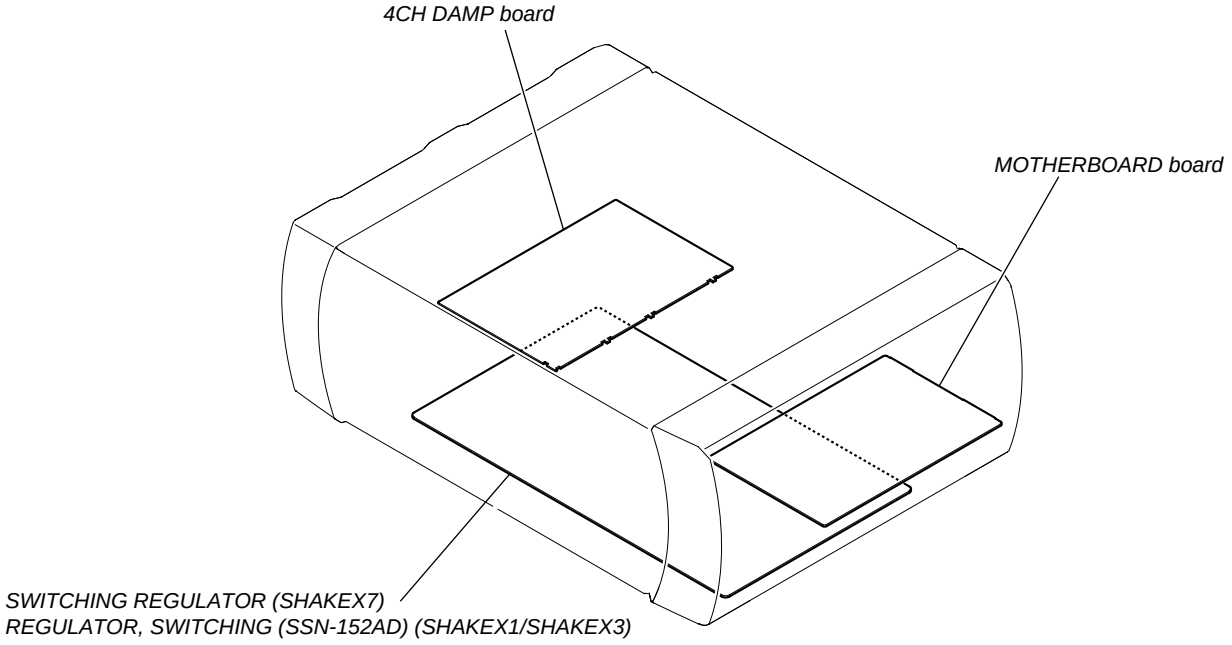

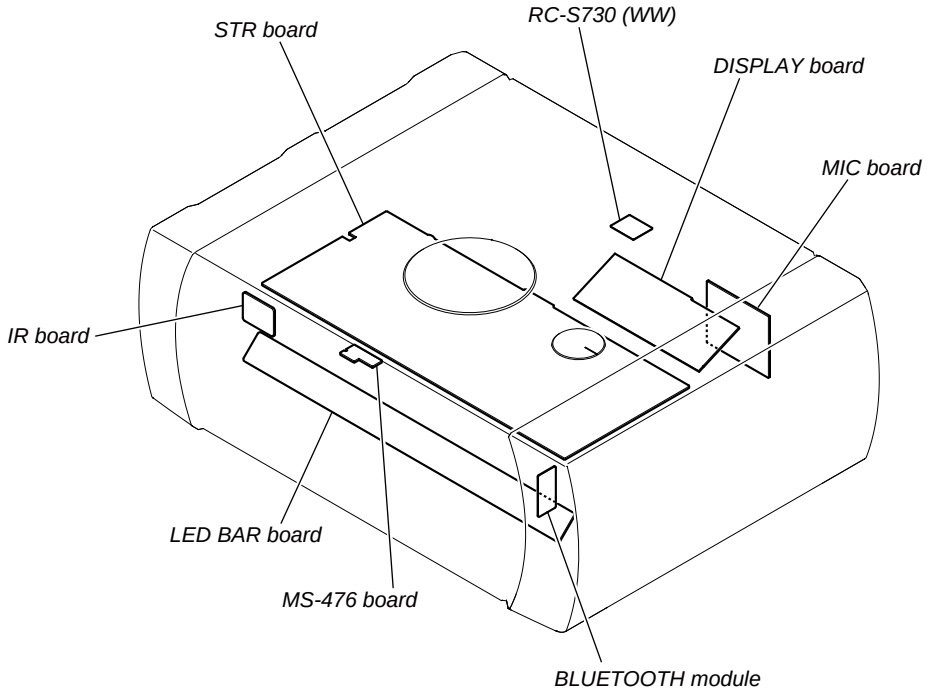

6-1. BLOCK DIAGRAM - RS SERVO, USB Section -

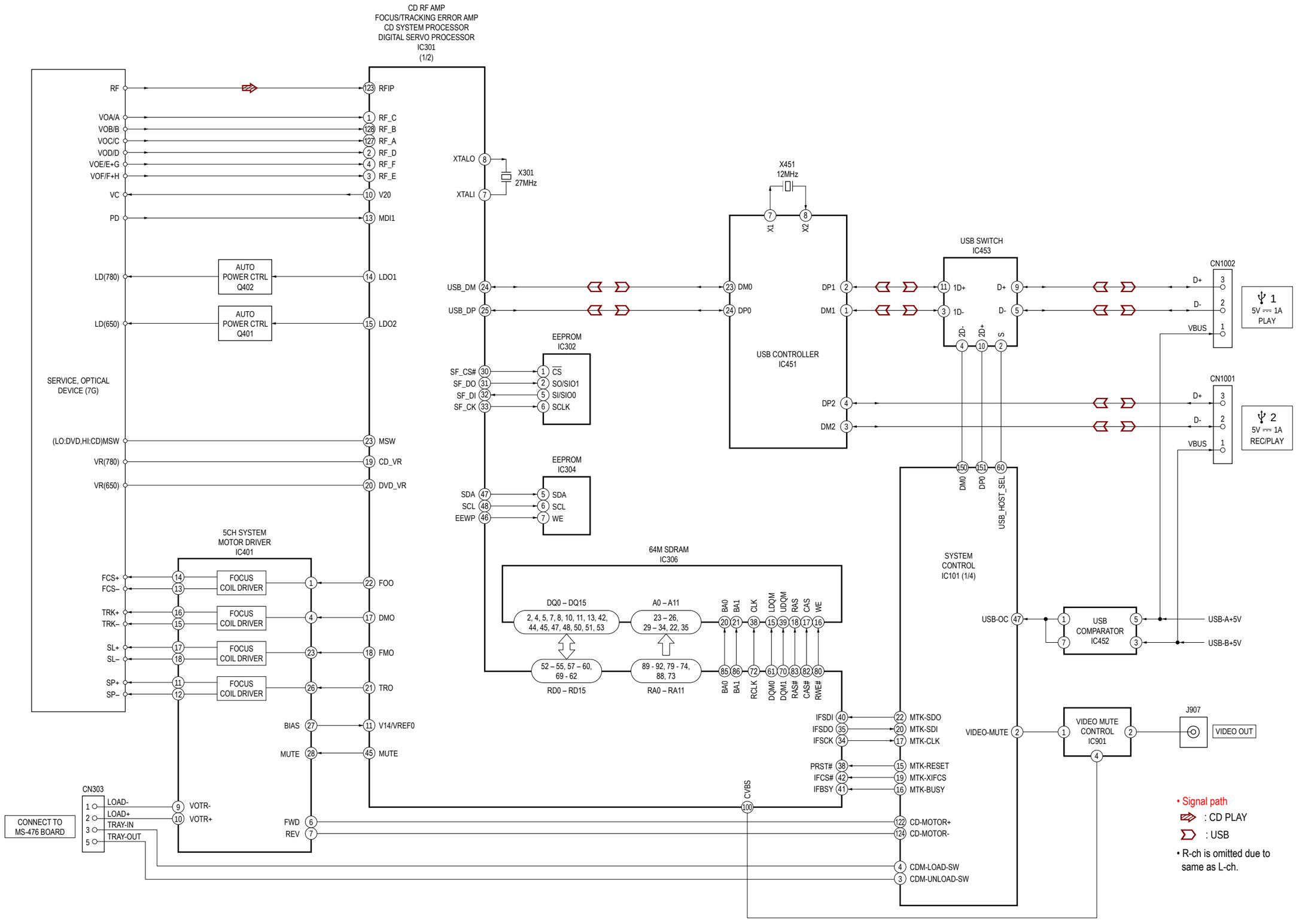

6-2. BLOCK DIAGRAM - MAIN Section -

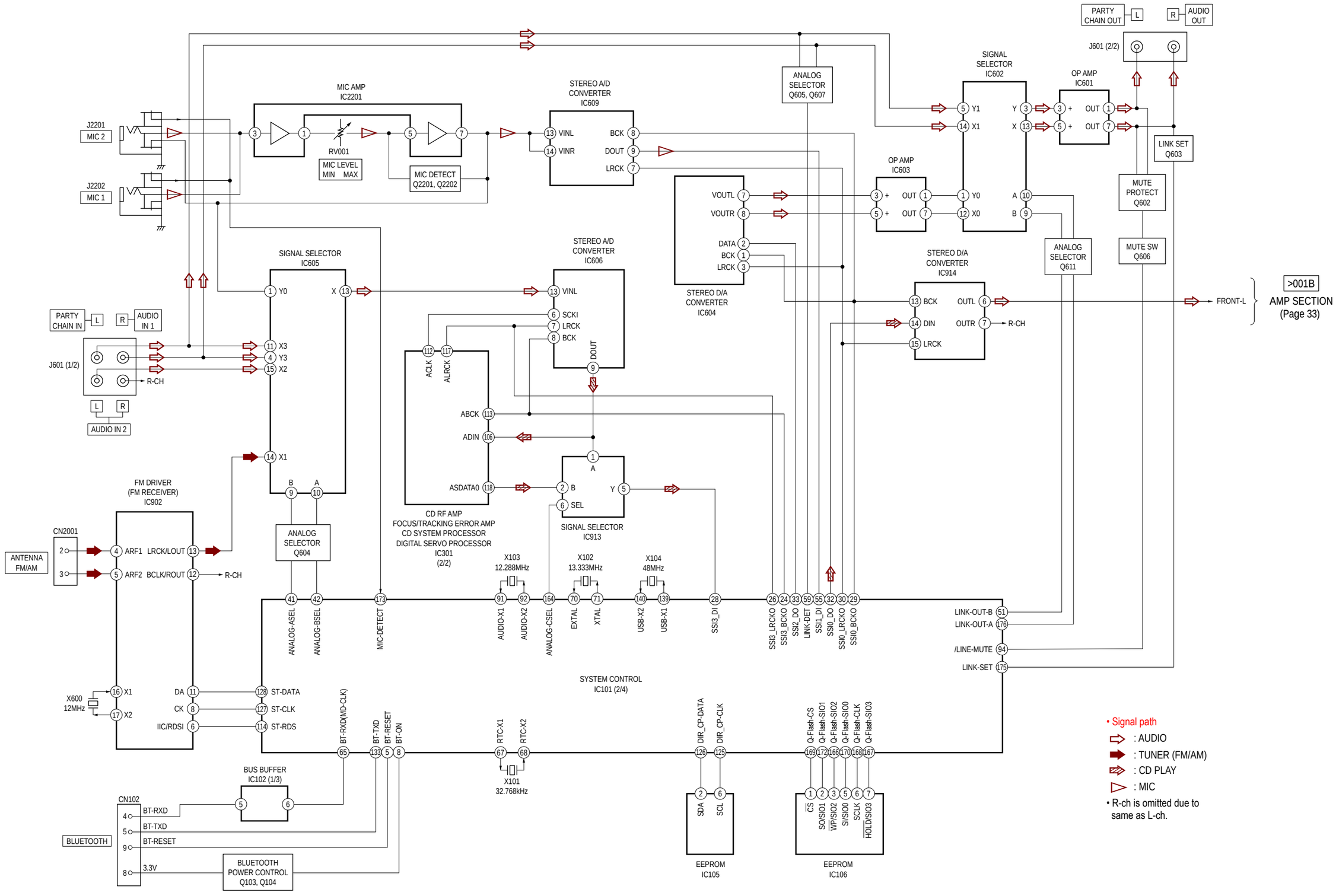

6-3. BLOCK DIAGRAM - AMP Section -

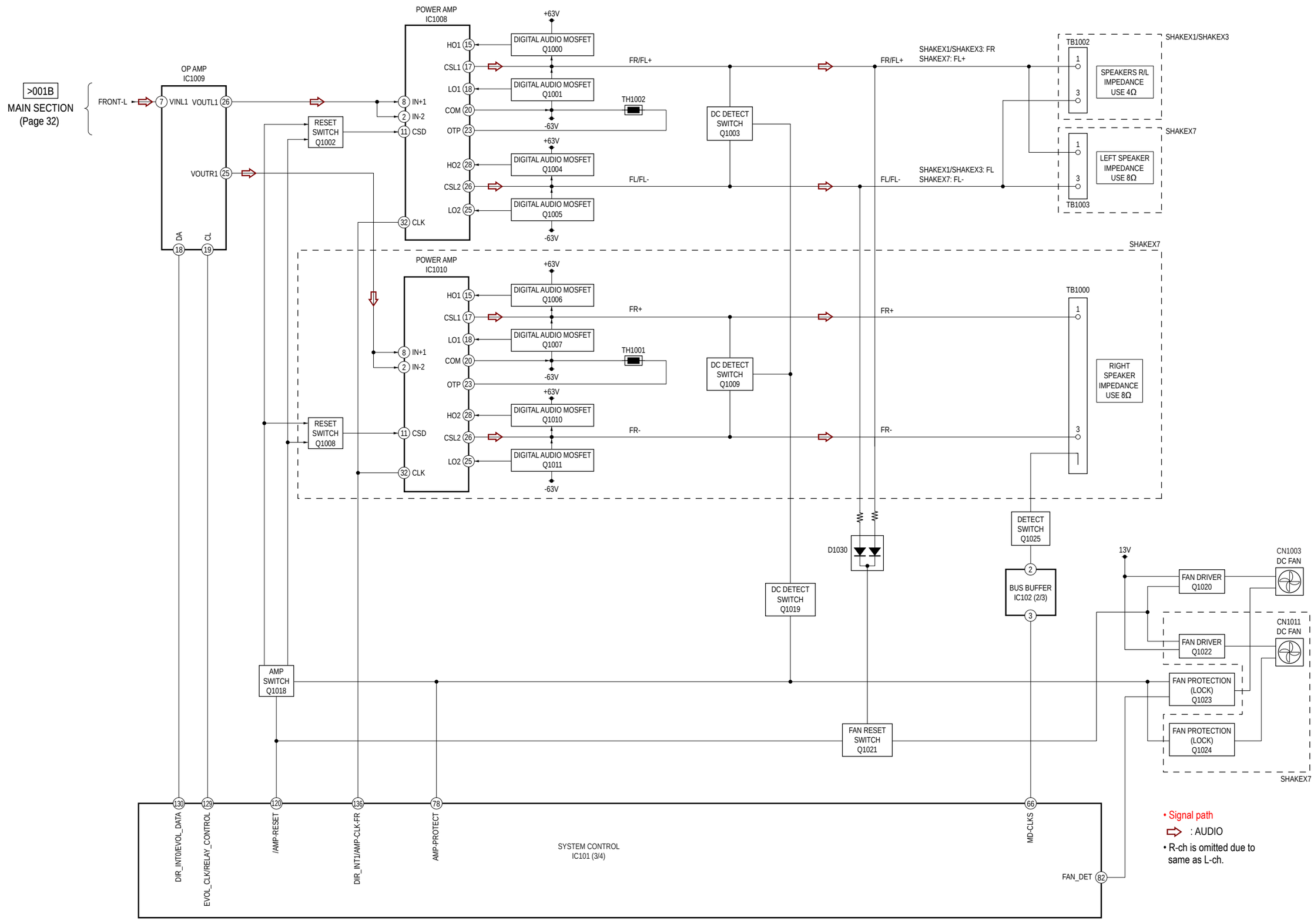

6-4. BLOCK DIAGRAM - PANEL, POWER SUPPLY Section -

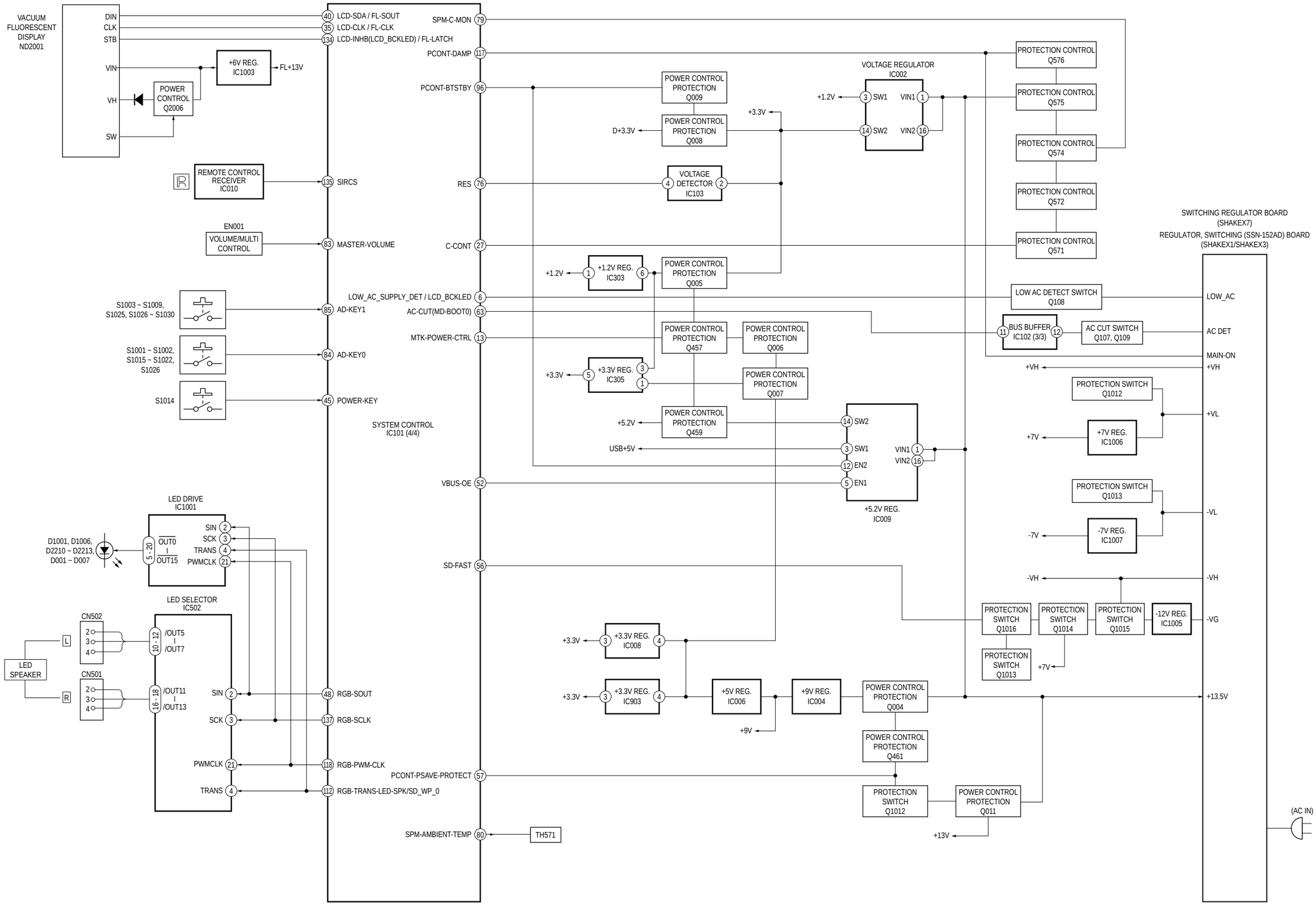

• Note for Printed Wiring Boards and Schematic Diagrams

Note on Printed Wiring Board:
- ○——— : parts extracted from the component side.
- ——— : parts extracted from the conductor side.
- ▒ : Pattern from the side which enables seeing.
(The other layer's patterns are not indicated.)

Caution:	
Pattern face side: (Conductor Side)	Parts on the pattern face side seen from the pattern face are indicated.
Parts face side: (Component Side)	Parts on the parts face side seen from the parts face are indicated.

- Indication of transistor

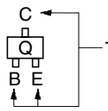

These are omitted.

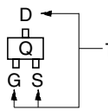

These are omitted.

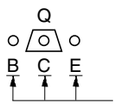

These are omitted.

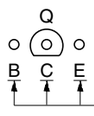

These are omitted.

- Abbreviation
  AR : Argentina model
  AUS : Australian model
  E4 : African model
  E12 : 220 – 240 V AC area in E models
  EA : Saudi Arabia model
  LA9 : Latin-American model
  MY : Malaysia model
  RU : Russian model
  TH : Thai model

Note on Schematic Diagram:
- All capacitors are in μF unless otherwise noted. (p: pF) 50 WV or less are not indicated except for electrolytics and tantalums.
- All resistors are in Ω and 1/4 W or less unless otherwise specified.
- ⊣▭⊢ : nonflammable resistor.
- ▭ : panel designation.

Note: The components identified by mark ⚠ or dotted line with mark ⚠ are critical for safety. Replace only with part number specified.

- ▬▬ : B+ Line.
- ▬ ▬ ▬ : B– Line.
- Voltage and waveforms are dc with respect to ground under no-signal (detuned) conditions.
  no mark : TUNER
  < > : CD PLAY
  * : Impossible to measure
- Voltages are taken with a VOM (Input impedance 10 MΩ). Voltage variations may be noted due to normal production tolerances.
- Waveforms are taken with a oscilloscope. Voltage variations may be noted due to normal production tolerances.
- Circled numbers refer to waveforms.
- Signal path.
  ⇨ : AUDIO
  ➡ : TUNER (FM/AM)
  ▷ : MIC
  ⇨ : CD PLAY
  ⊃ : USB

- Abbreviation
  AR : Argentina model
  AUS : Australian model
  E4 : African model
  E12 : 220 – 240 V AC area in E models
  EA : Saudi Arabia model
  LA9 : Latin-American model
  MY : Malaysia model
  RU : Russian model
  TH : Thai model

• Waveforms

– MOTHERBOARD Board –

① IC451 ⑧ (X2)

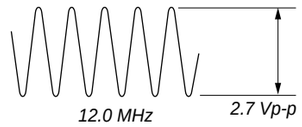

100 mV/DIV, 25 ns/DIV

② IC101 ⑦⑪ (XTAL)

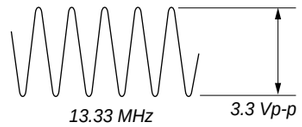

200 mV/DIV, 25 ns/DIV

③ IC101 ⑨② (AUDIO-X2)

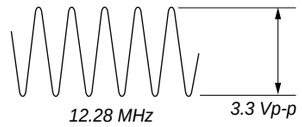

200 mV/DIV, 25 ns/DIV

④ IC101 ⑬⑧ (USB-X1)

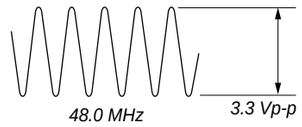

50 mV/DIV, 5 ns/DIV

6-5. PRINTED WIRING BOARD - MOTHERBOARD Board (Component Side) -

• See page 30 for Circuit Boards Location. • : Uses unleaded solder.

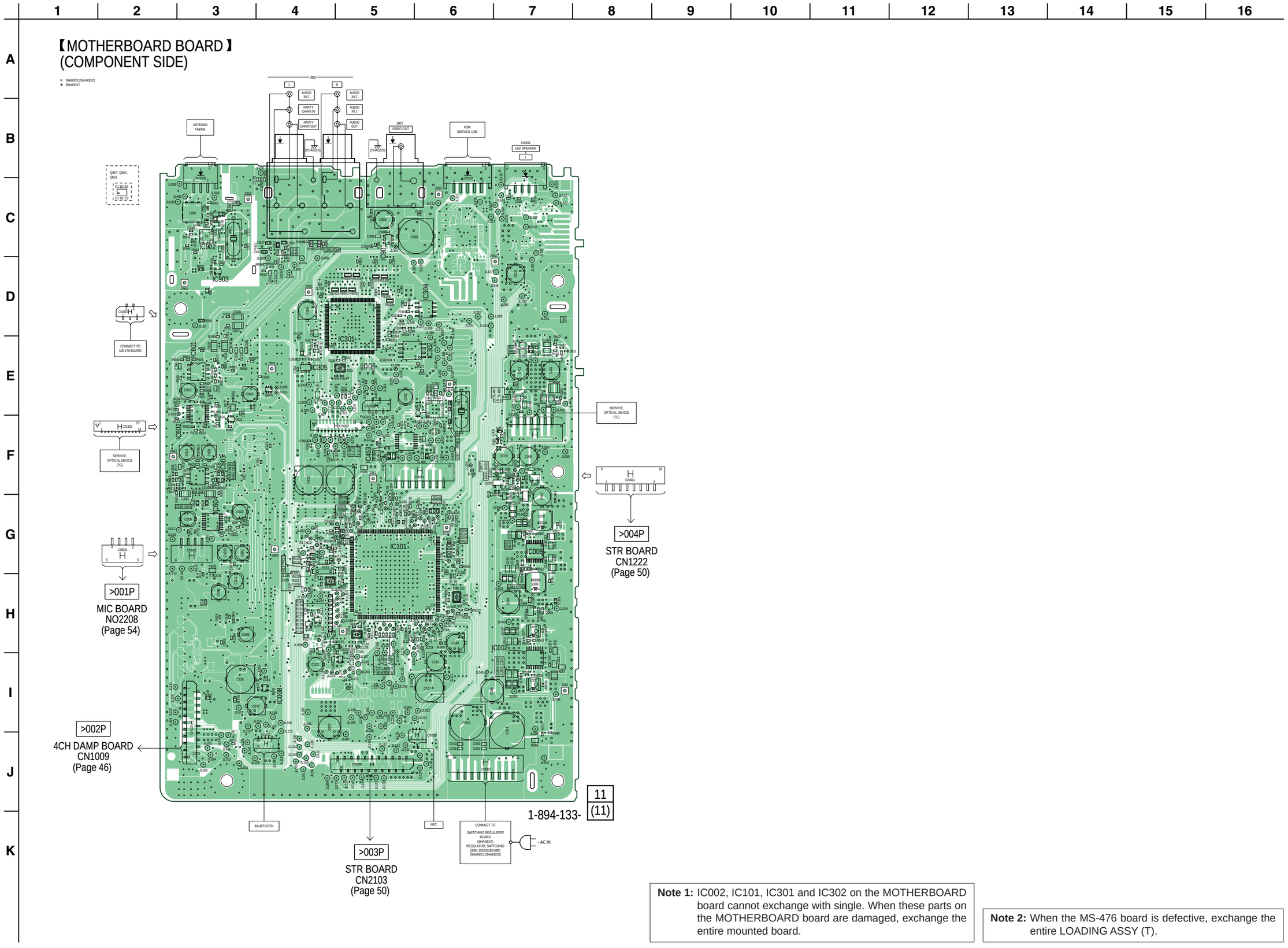

Note 1: IC002, IC101, IC301 and IC302 on the MOTHERBOARD board cannot exchange with single. When these parts on the MOTHERBOARD board are damaged, exchange the entire mounted board.

Note 2: When the MS-476 board is defective, exchange the entire LOADING ASSY (T).

6-6. PRINTED WIRING BOARD - MOTHERBOARD Board (Conductor Side) -

• See page 30 for Circuit Boards Location. • : Uses unleaded solder.

【MOTHERBOARD BOARD】
(CONDUCTOR SIDE)

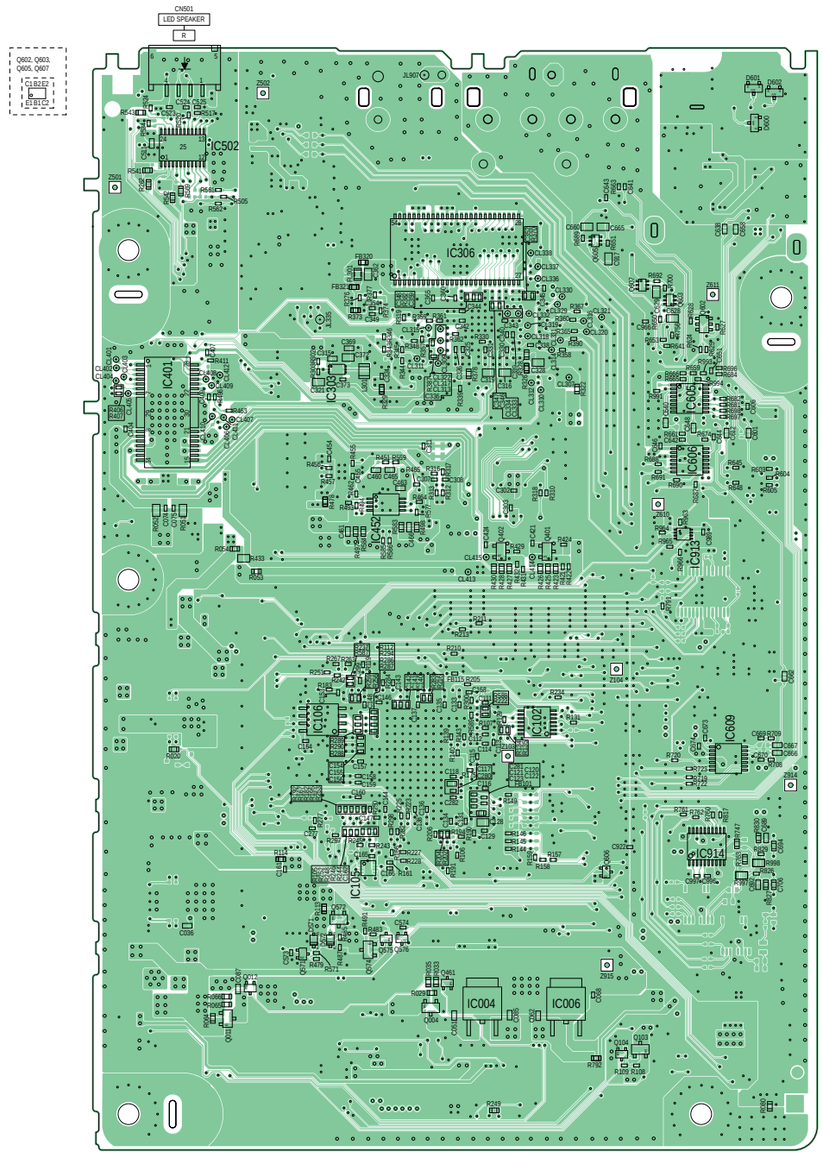

1-894-133- 11 (11)

Note: IC105, IC106 and IC303 on the MOTHERBOARD board cannot exchange with single. When these parts on the MOTHERBOARD board are damaged, exchange the entire mounted board.

6-7. SCHEMATIC DIAGRAM - MOTHERBOARD Board (1/8) - • See page 57 for IC Block Diagrams.

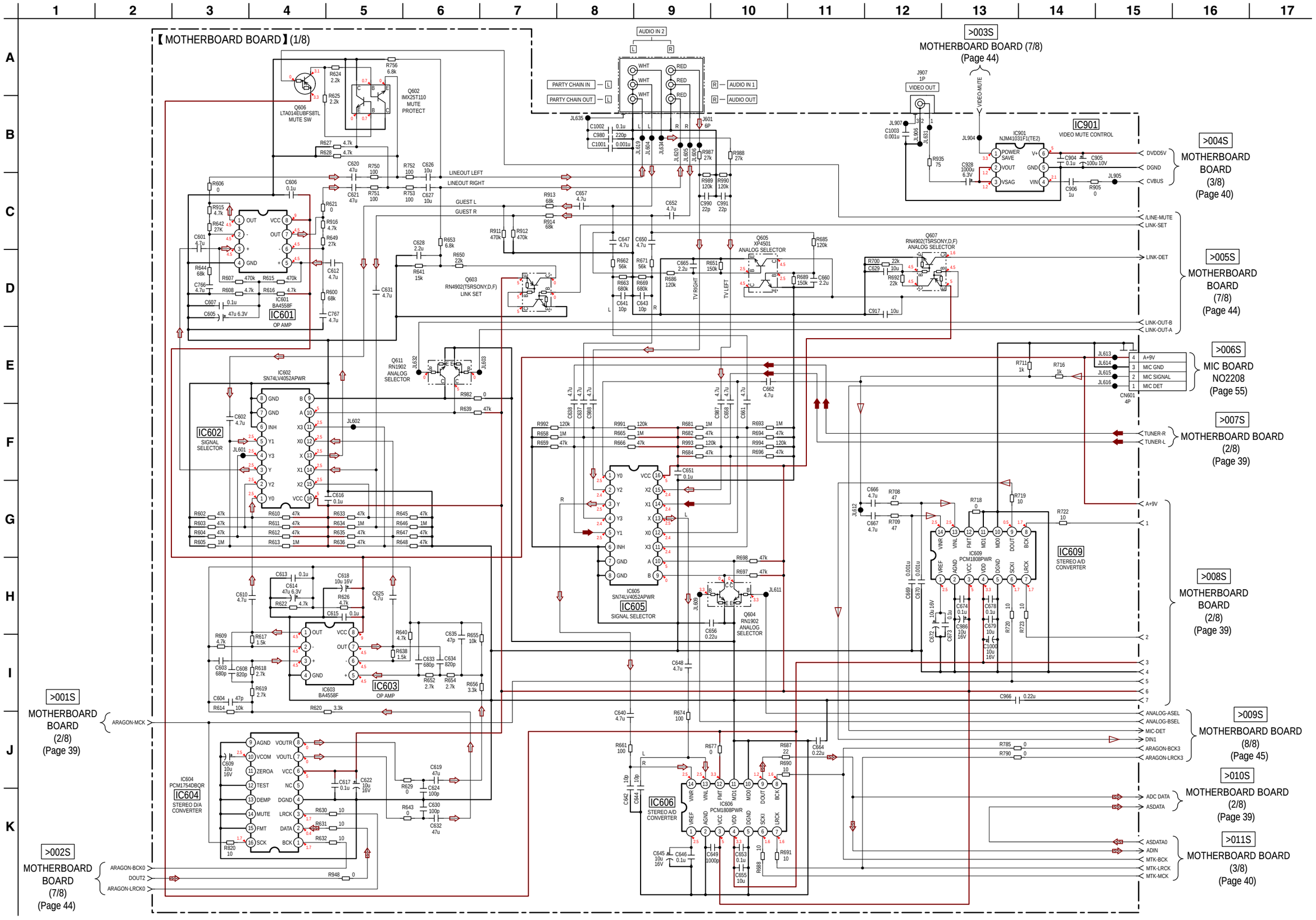

6-8. SCHEMATIC DIAGRAM - MOTHERBOARD Board (2/8) - • See page 57 for IC Block Diagrams.

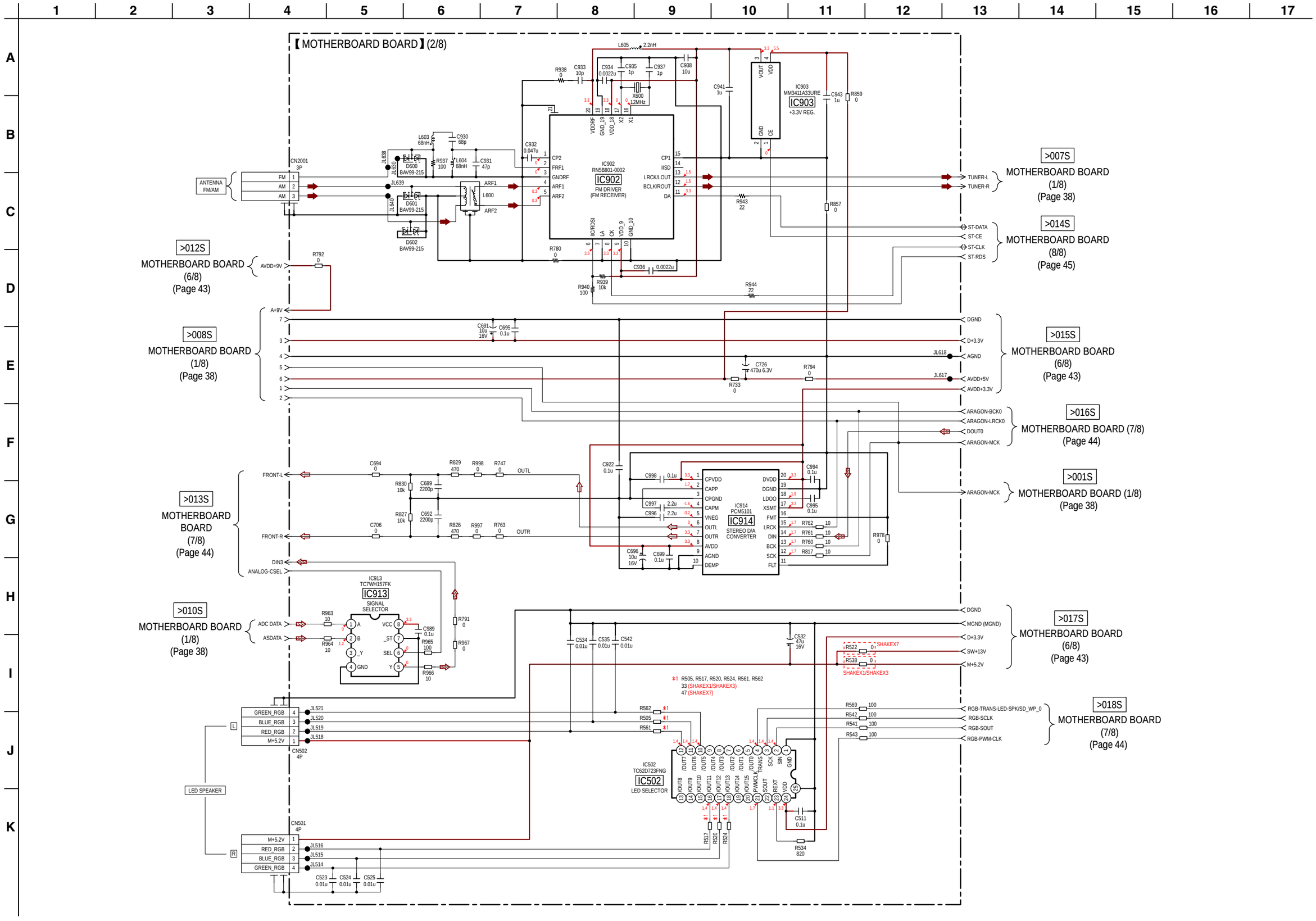

6-9. SCHEMATIC DIAGRAM - MOTHERBOARD Board (3/8) - • See page 57 for IC Block Diagrams. • See page 63 for IC Pin Function Descriptions.

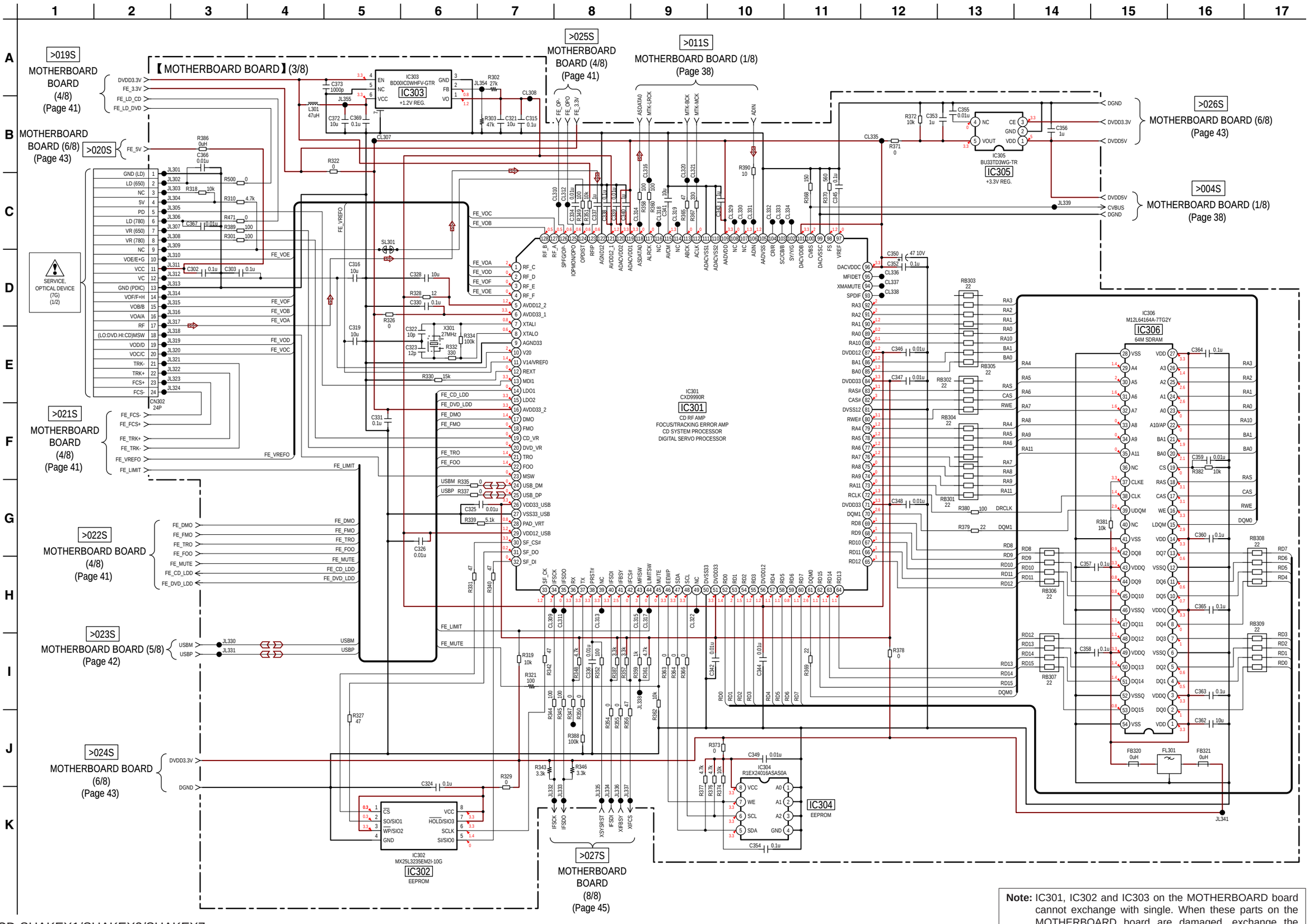

Note: IC301, IC302 and IC303 on the MOTHERBOARD board cannot exchange with single. When these parts on the MOTHERBOARD board are damaged, exchange the entire mounted board.

6-10. SCHEMATIC DIAGRAM - MOTHERBOARD Board (4/8) - • See page 57 for IC Block Diagrams.

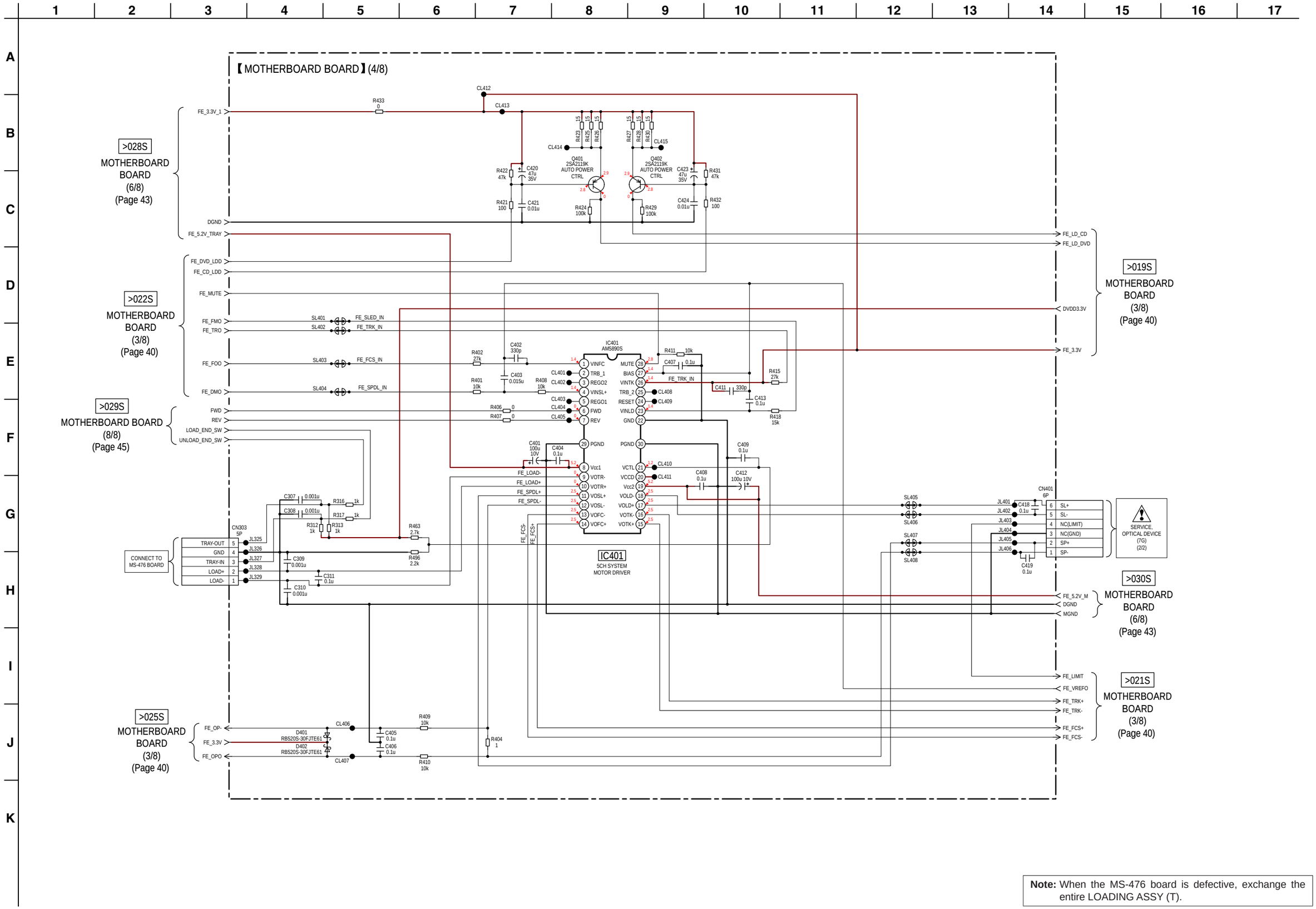

Note: When the MS-476 board is defective, exchange the entire LOADING ASSY (T).

6-11. SCHEMATIC DIAGRAM - MOTHERBOARD Board (5/8) -

• See page 35 for Waveforms. • See page 57 for IC Block Diagrams.

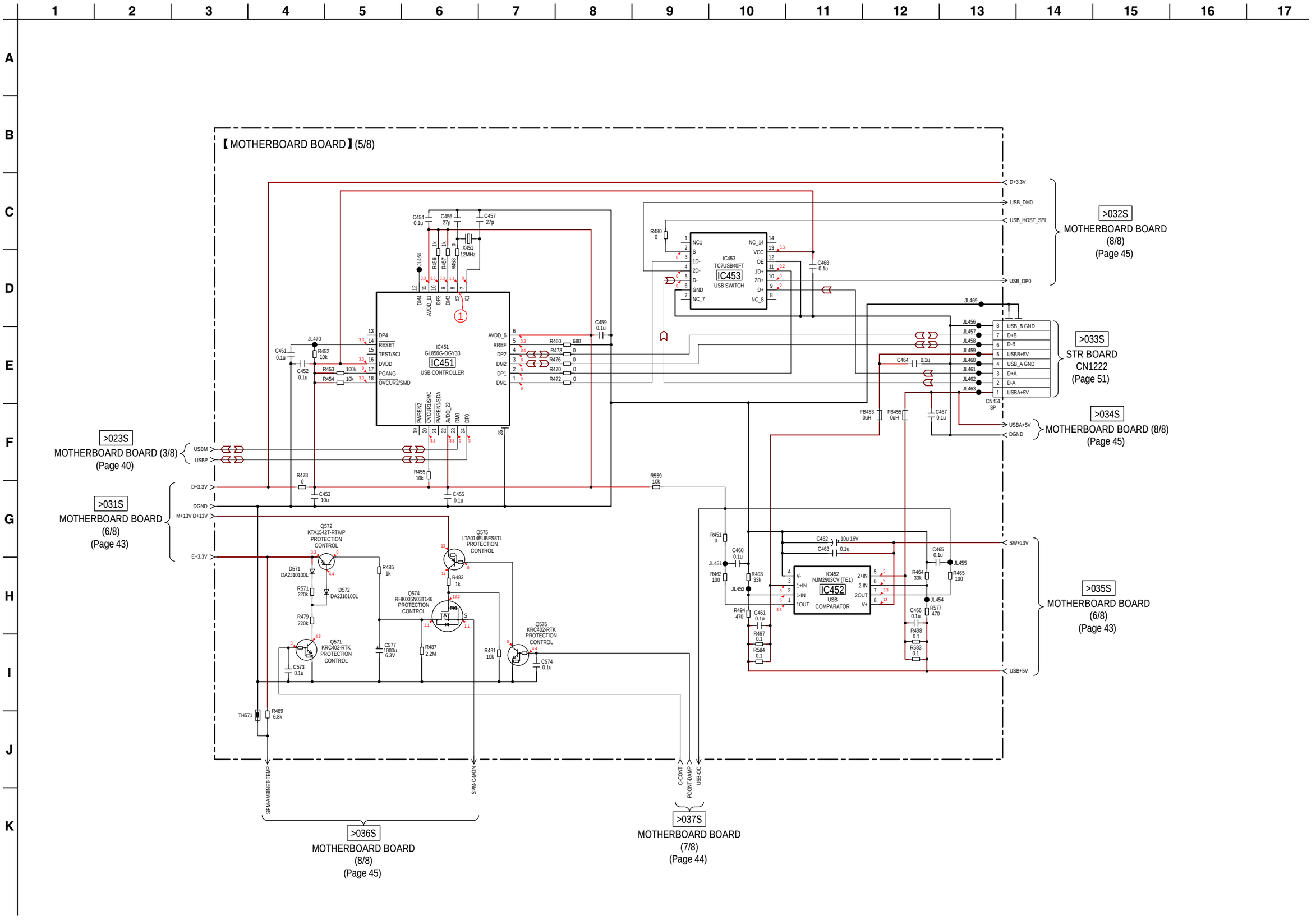

6-12. SCHEMATIC DIAGRAM - MOTHERBOARD Board (6/8) -

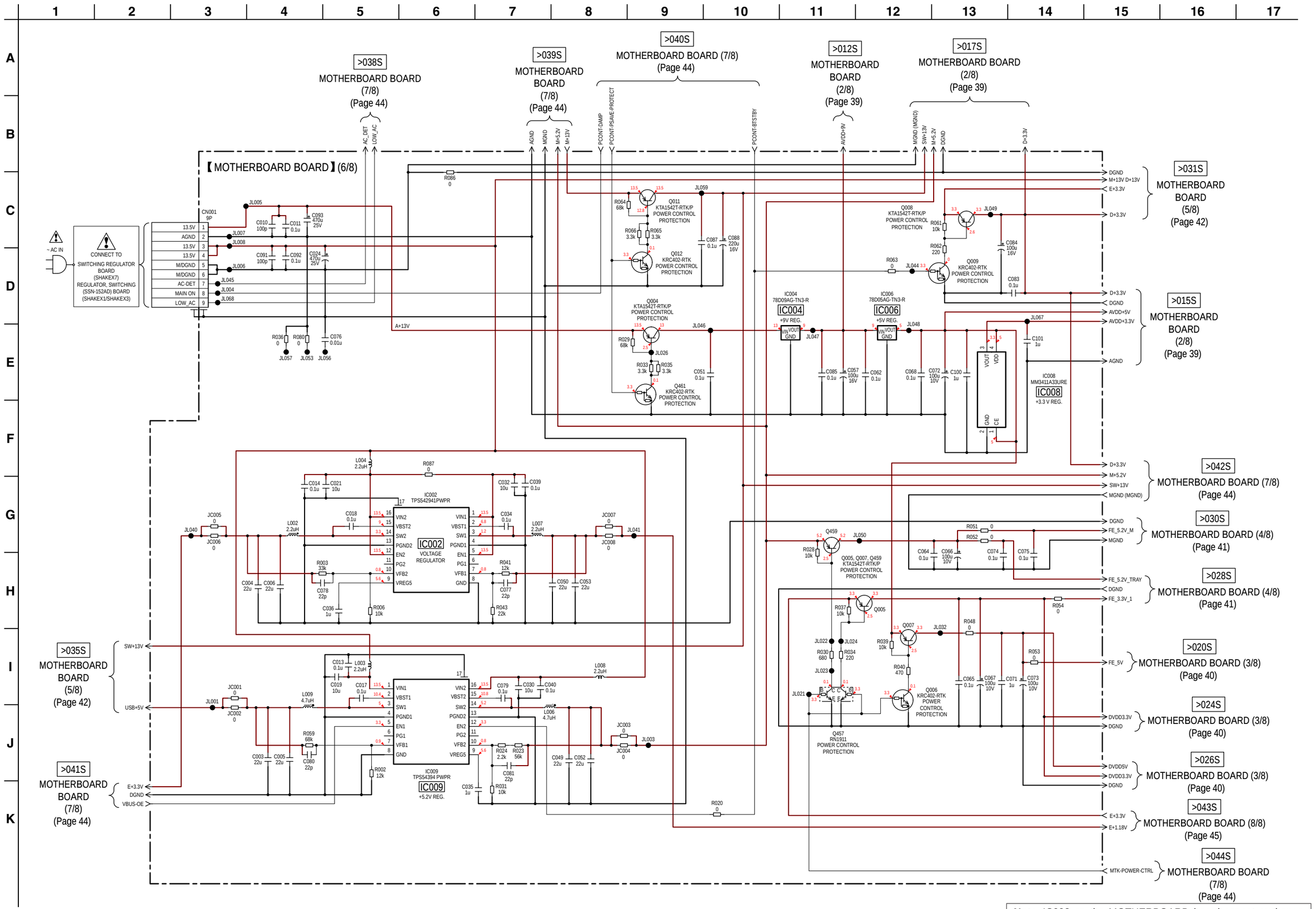

Note: IC002 on the MOTHERBOARD board cannot exchange with single. When this part on the MOTHERBOARD board is damaged, exchange the entire mounted board.

6-13. SCHEMATIC DIAGRAM - MOTHERBOARD Board (7/8) - • See page 57 for IC Block Diagrams.

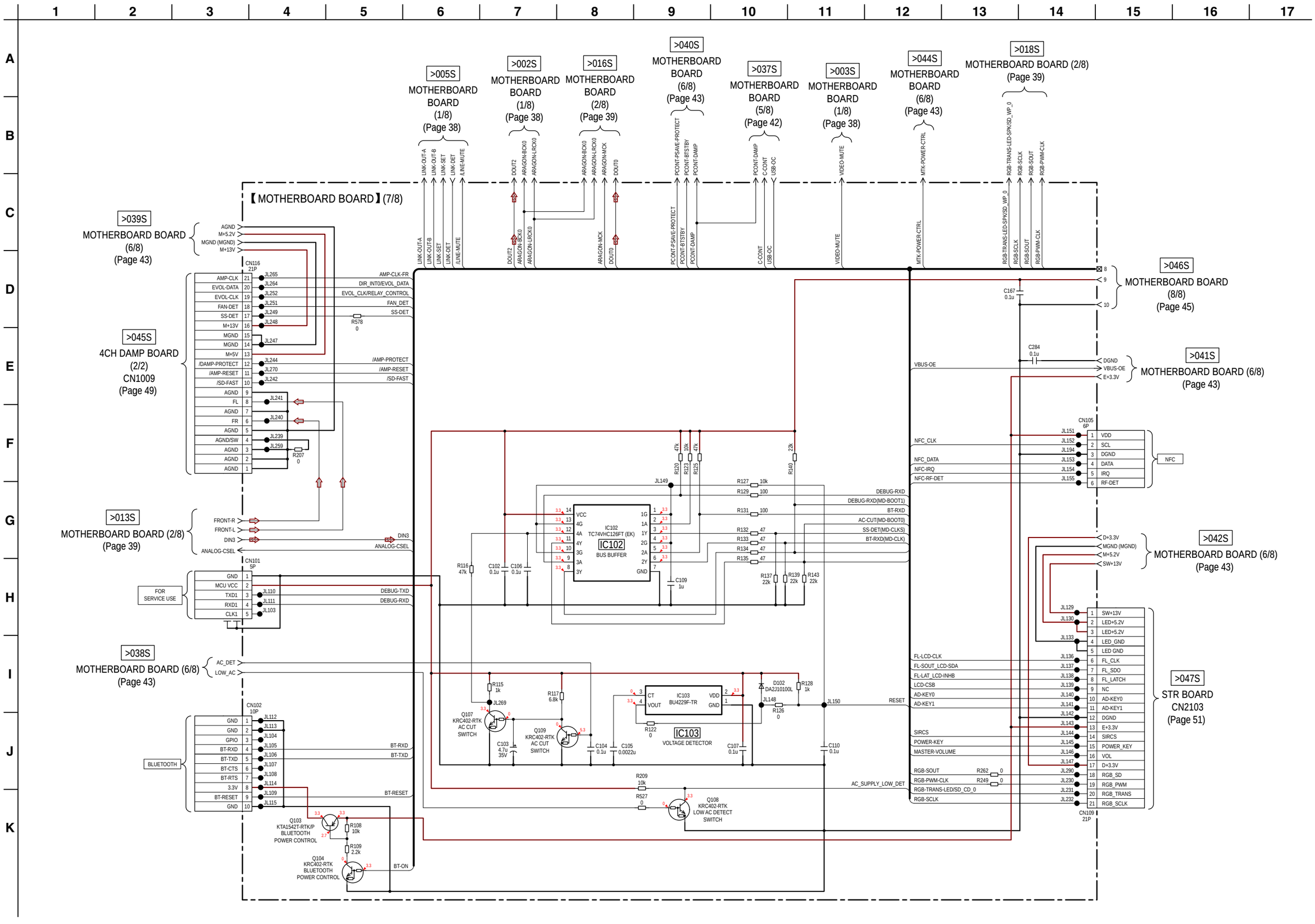

6-14. SCHEMATIC DIAGRAM - MOTHERBOARD Board (8/8) -

• See page 35 for Waveforms. • See page 57 for IC Block Diagrams. • See page 63 for IC Pin Function Descriptions.

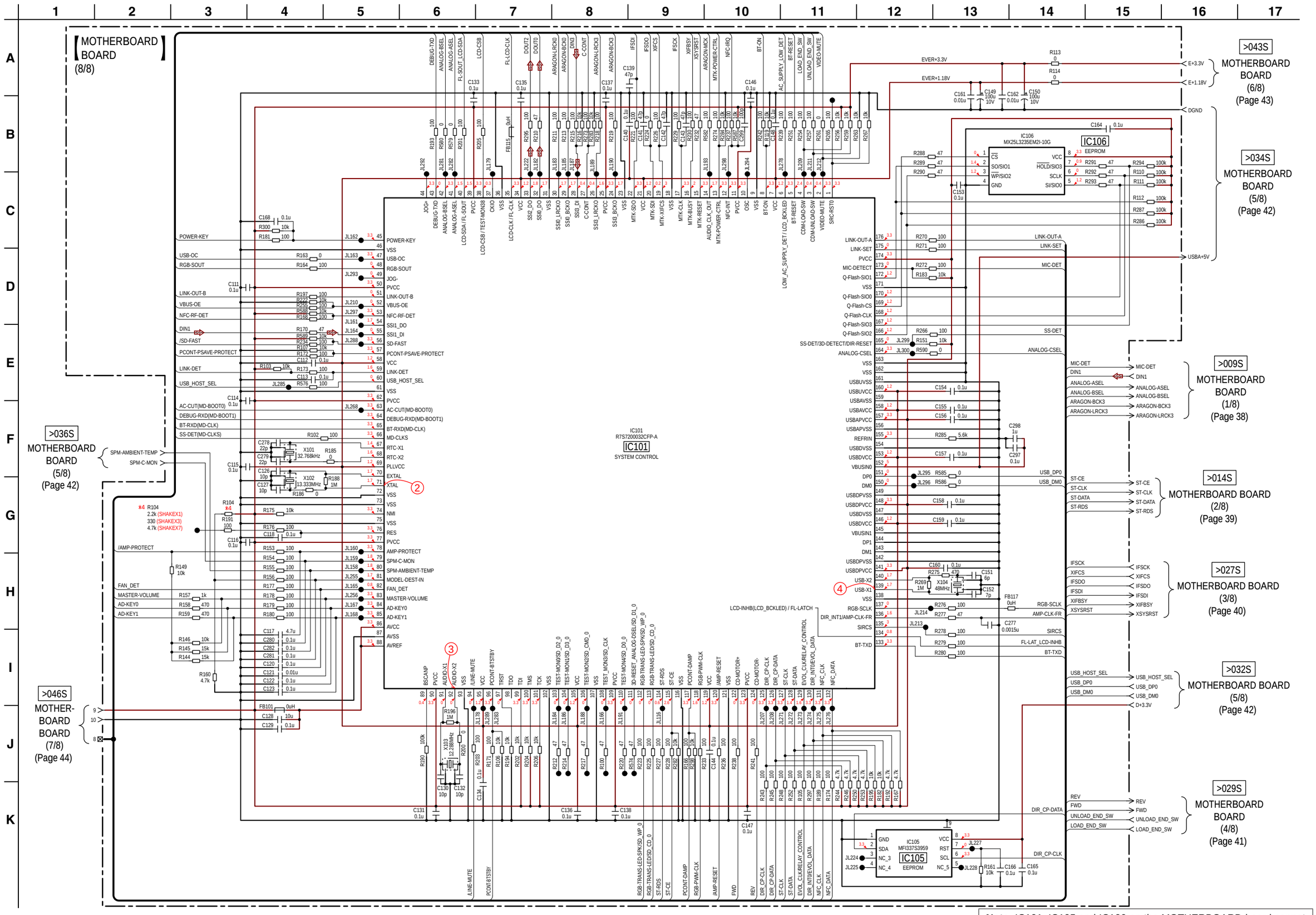

Note: IC101, IC105 and IC106 on the MOTHERBOARD board cannot exchange with single. When these parts on the MOTHERBOARD board are damaged, exchange the entire mounted board.

6-15. PRINTED WIRING BOARD - 4CH DAMP Board (Component Side) -

• See page 30 for Circuit Boards Location. • : Uses unleaded solder.

【4CH DAMP BOARD】
(COMPONENT SIDE)

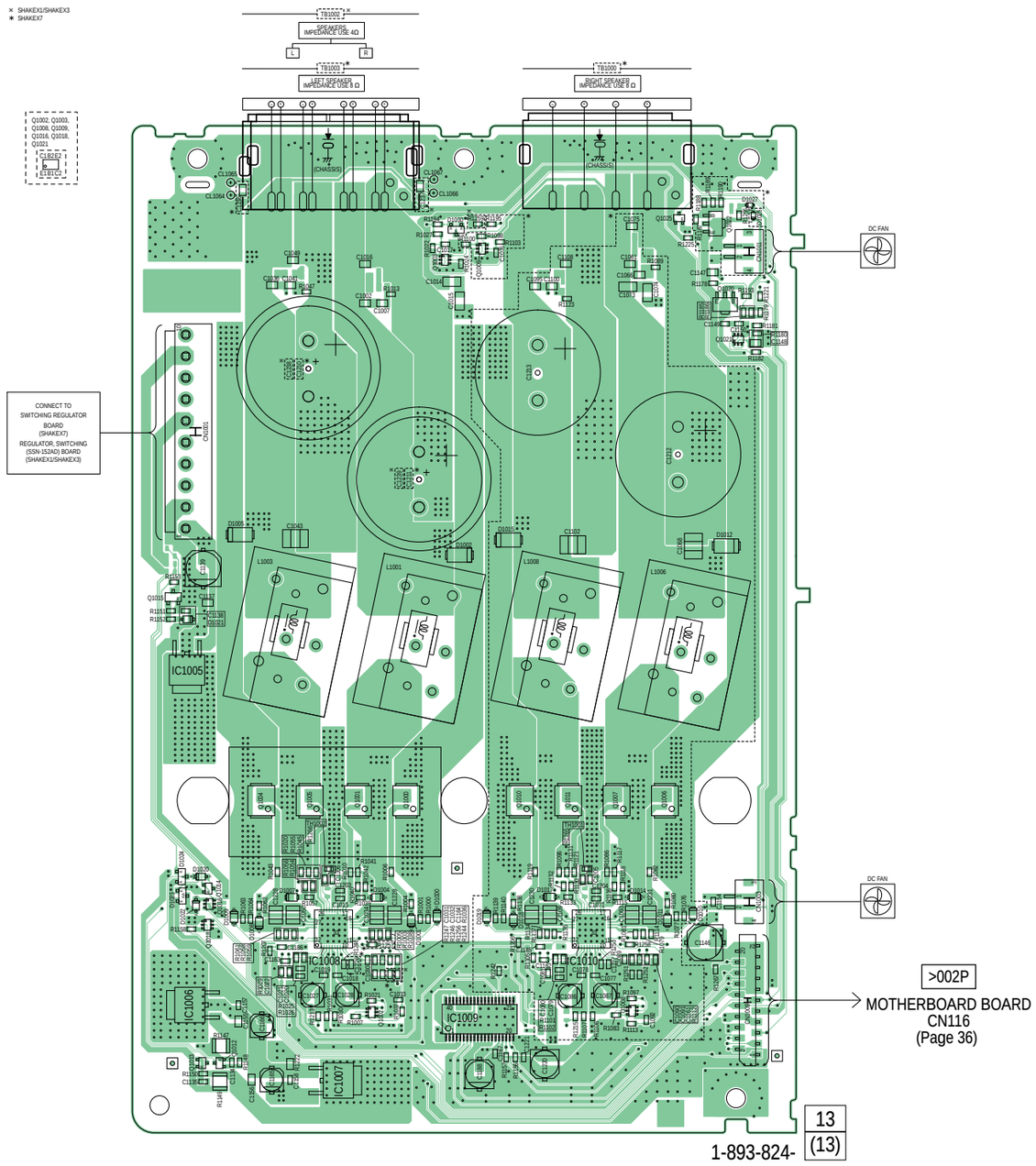

Note: IC1008 and IC1010 on the 4CH DAMP board cannot exchange with single. When these parts on the 4CH DAMP board are damaged, exchange the entire mounted board.

6-16. PRINTED WIRING BOARD - 4CH DAMP Board (Conductor Side) -

• See page 30 for Circuit Boards Location. • : Uses unleaded solder.

【4CH DAMP BOARD】
(CONDUCTOR SIDE)

* SHAKEX7

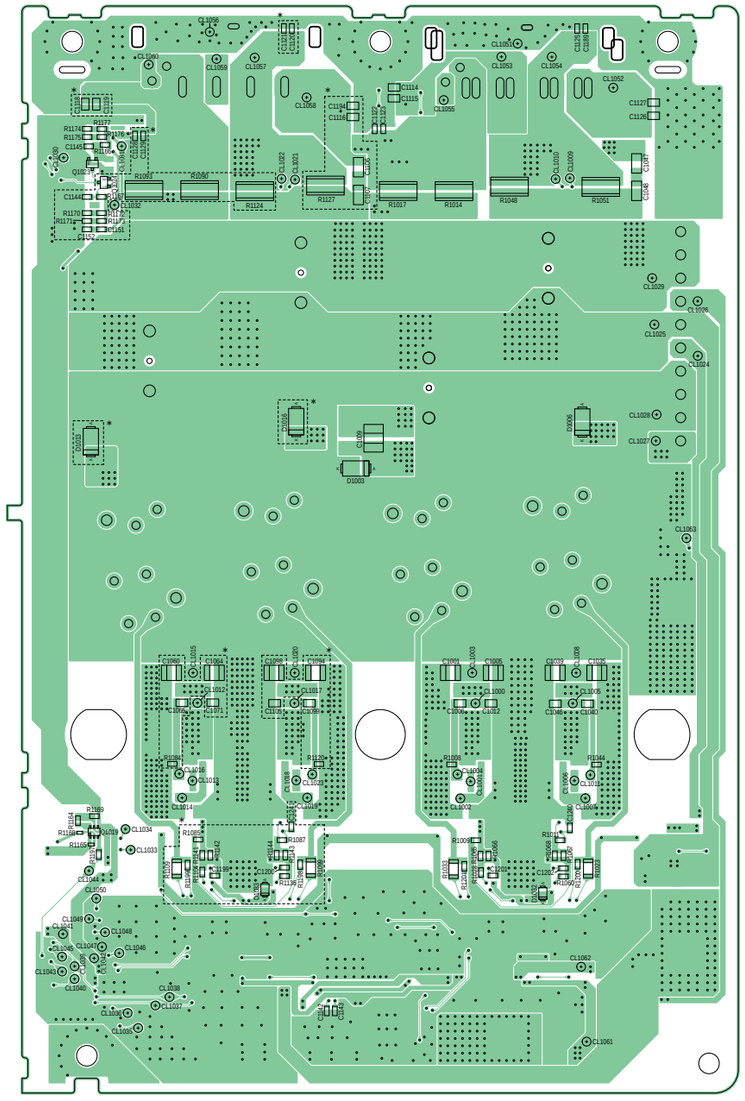

1-893-824-

13
(13)

6-17. SCHEMATIC DIAGRAM - 4CH DAMP Board (1/2) - • See page 57 for IC Block Diagrams.

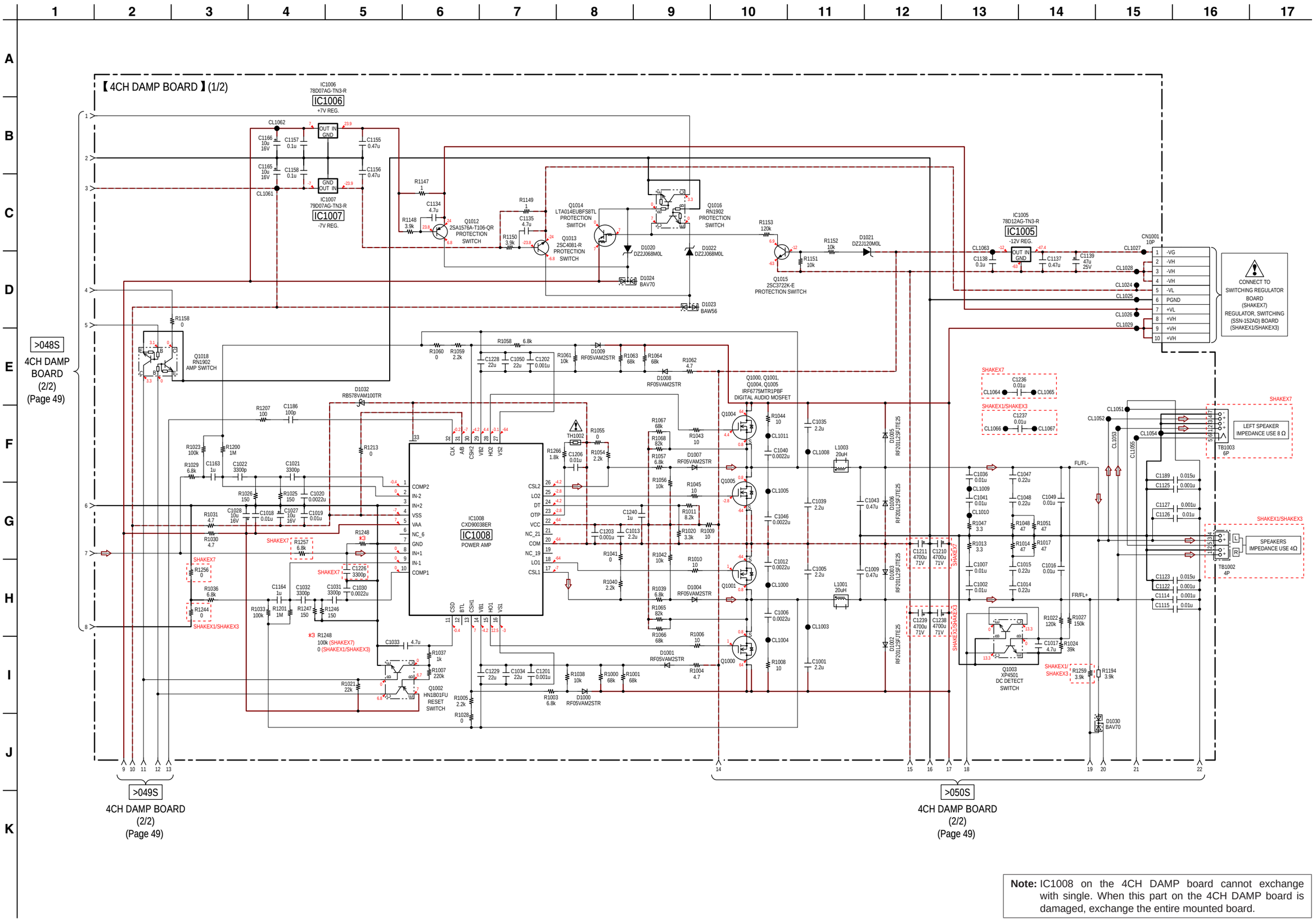

Note: IC1008 on the 4CH DAMP board cannot exchange with single. When this part on the 4CH DAMP board is damaged, exchange the entire mounted board.

6-18. SCHEMATIC DIAGRAM - 4CH DAMP Board (2/2) - • See page 57 for IC Block Diagrams.

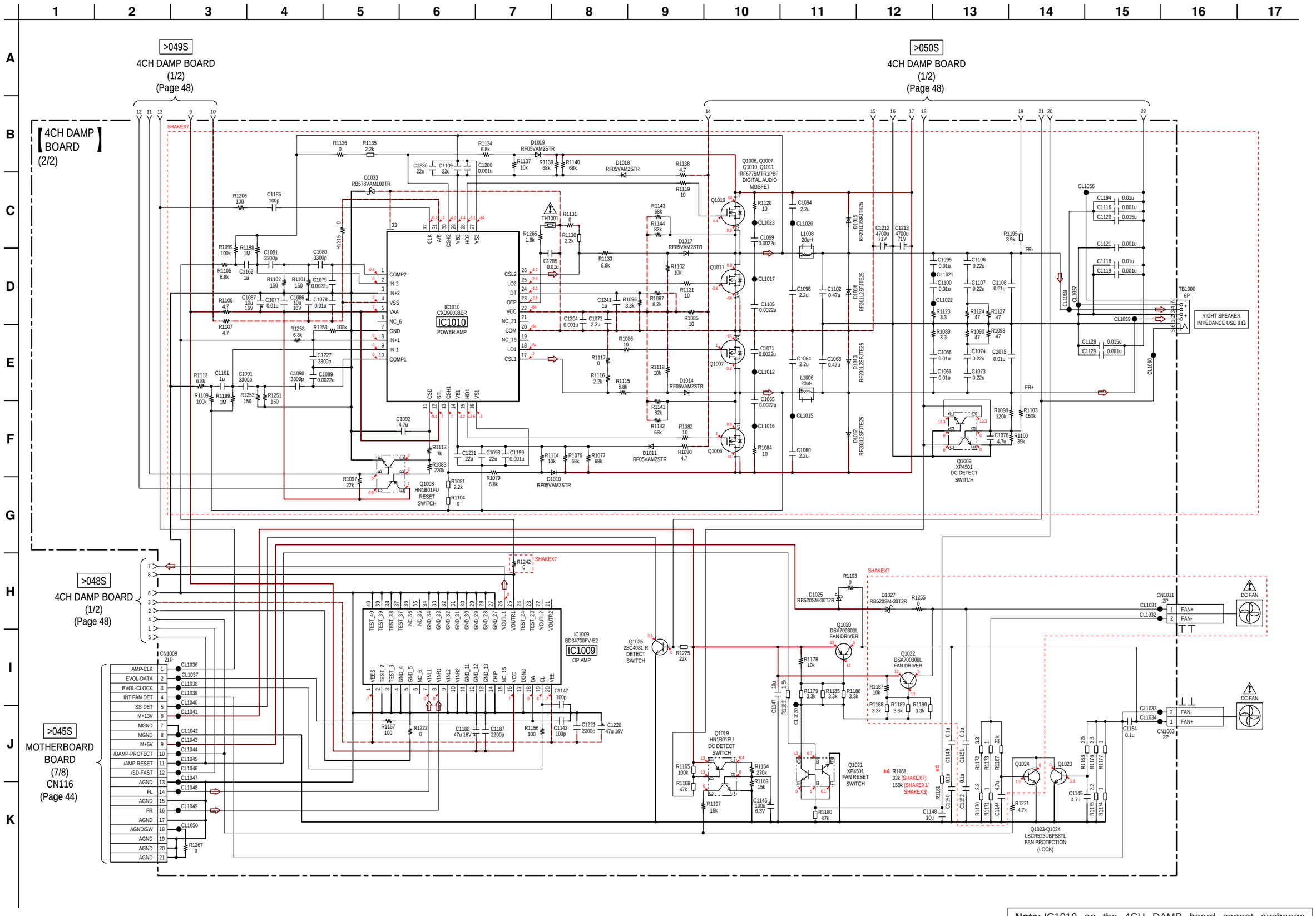

Note: IC1010 on the 4CH DAMP board cannot exchange with single. When this part on the 4CH DAMP board is damaged, exchange the entire mounted board.

6-19. PRINTED WIRING BOARD - STR Board -

• See page 30 for Circuit Boards Location. • : Uses unleaded solder.

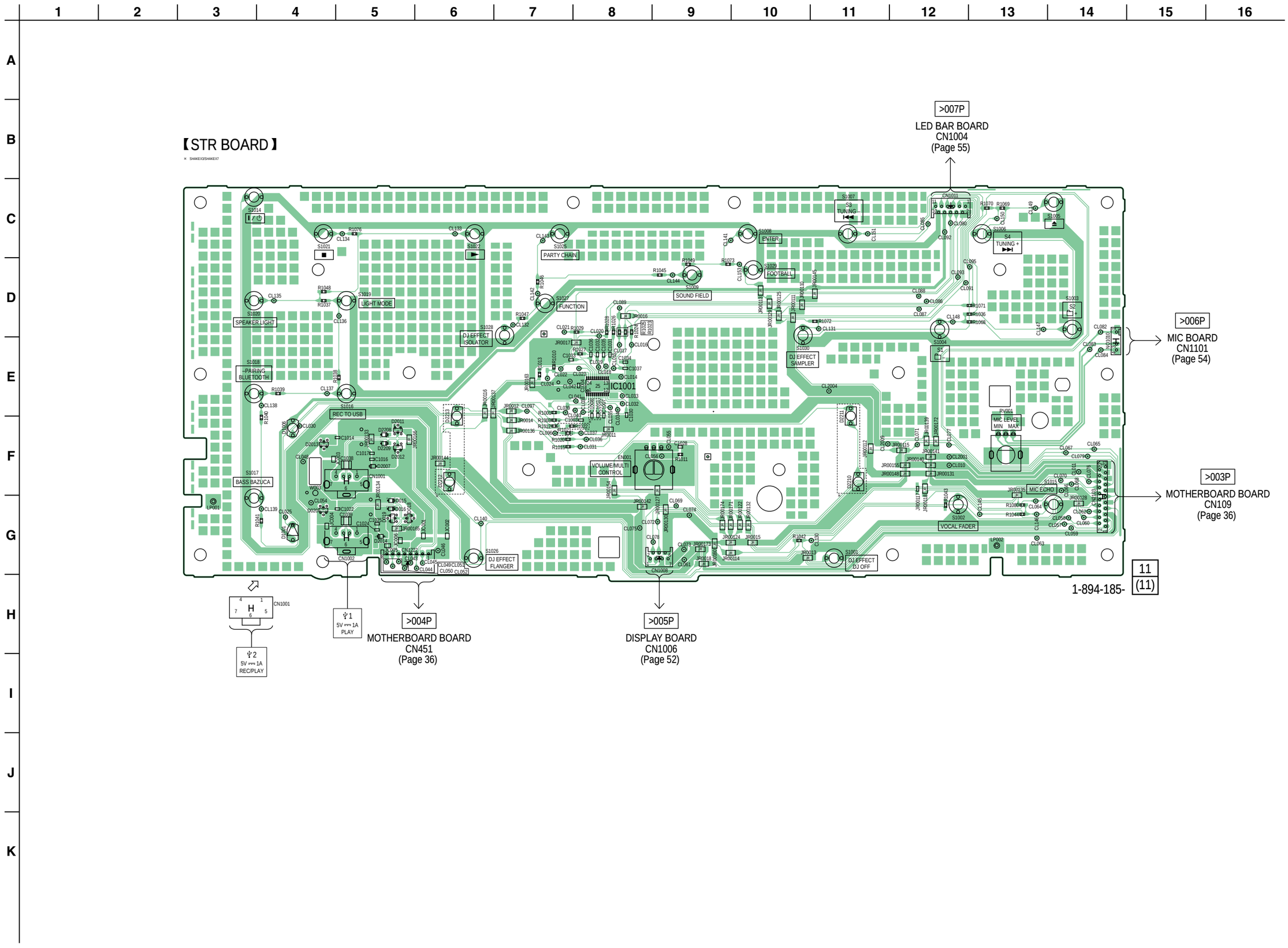

6-20. SCHEMATIC DIAGRAM - STR Board - • See page 57 for IC Block Diagrams.

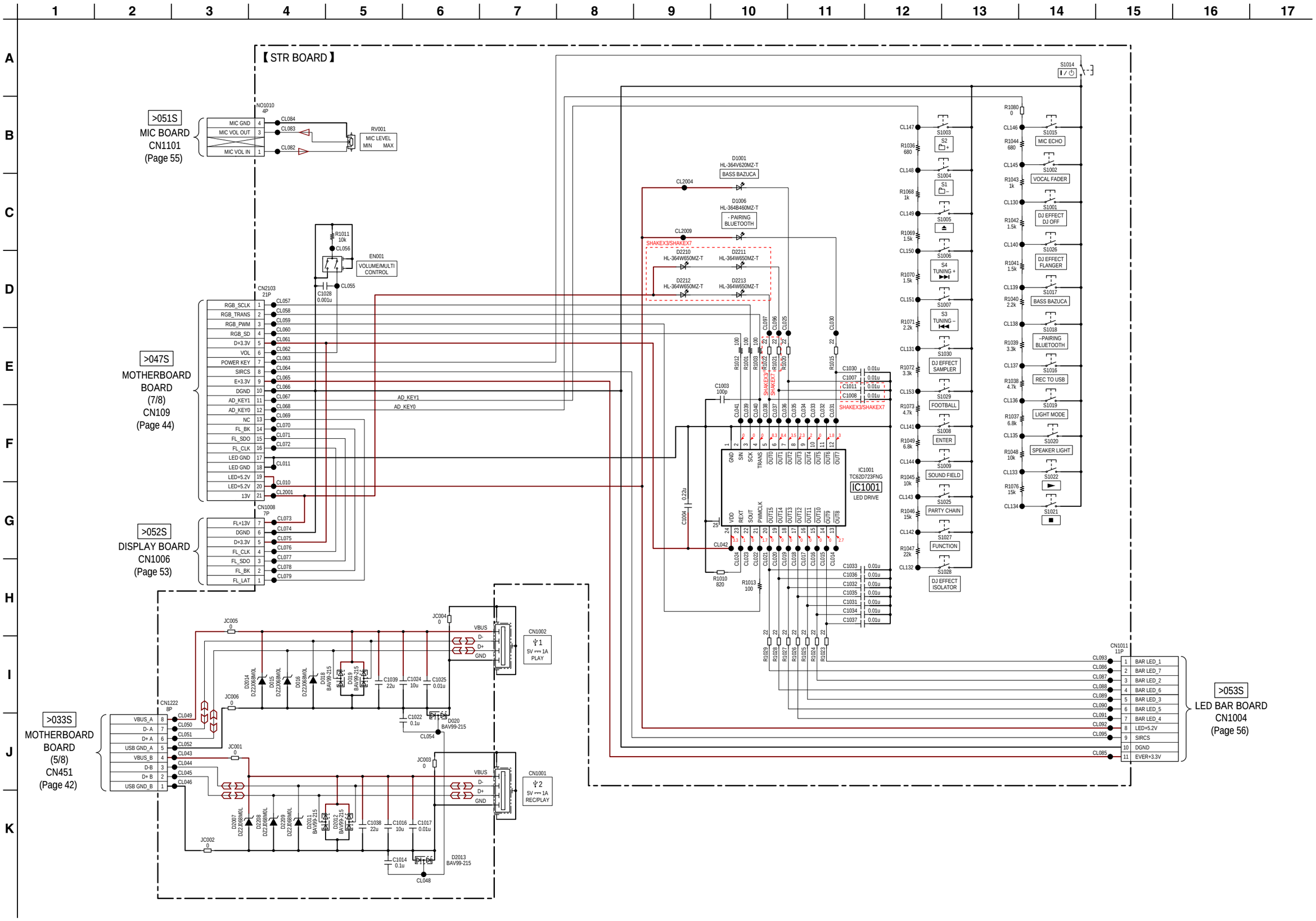

6-21. PRINTED WIRING BOARD - DISPLAY Board -

• See page 30 for Circuit Boards Location. • : Uses unleaded solder.

【DISPLAY BOARD】

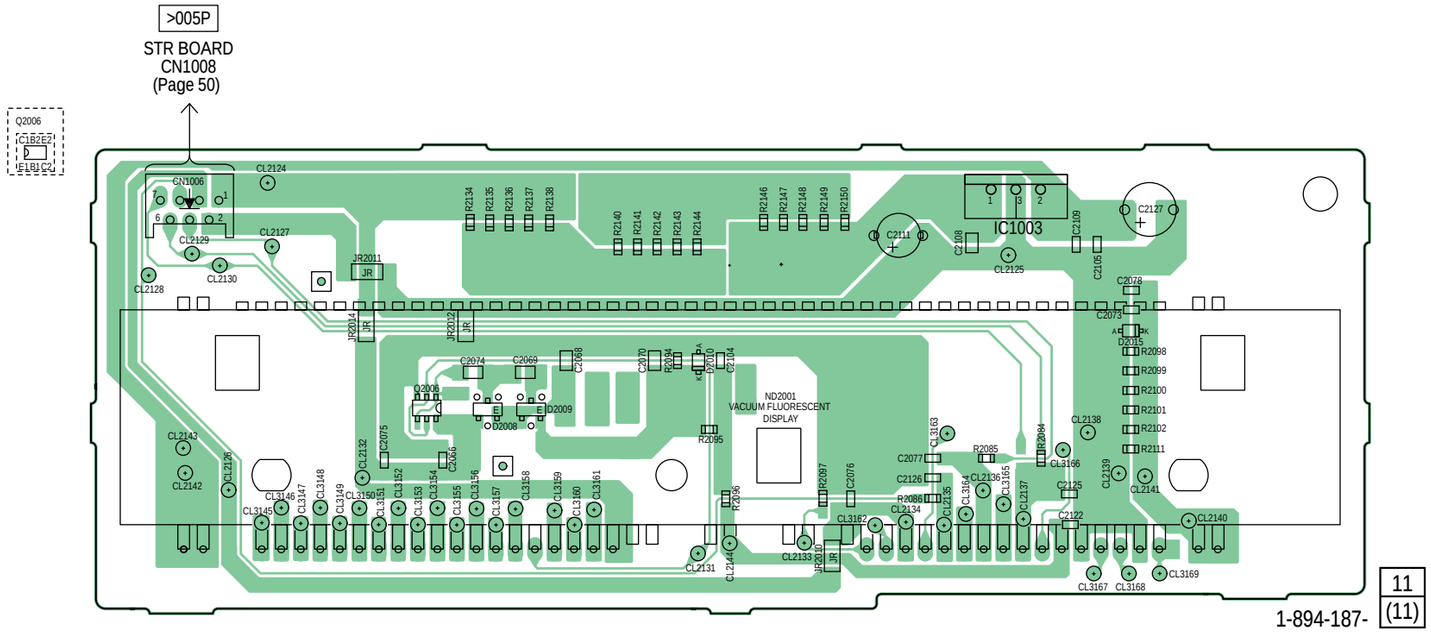

6-22. SCHEMATIC DIAGRAM - DISPLAY Board -

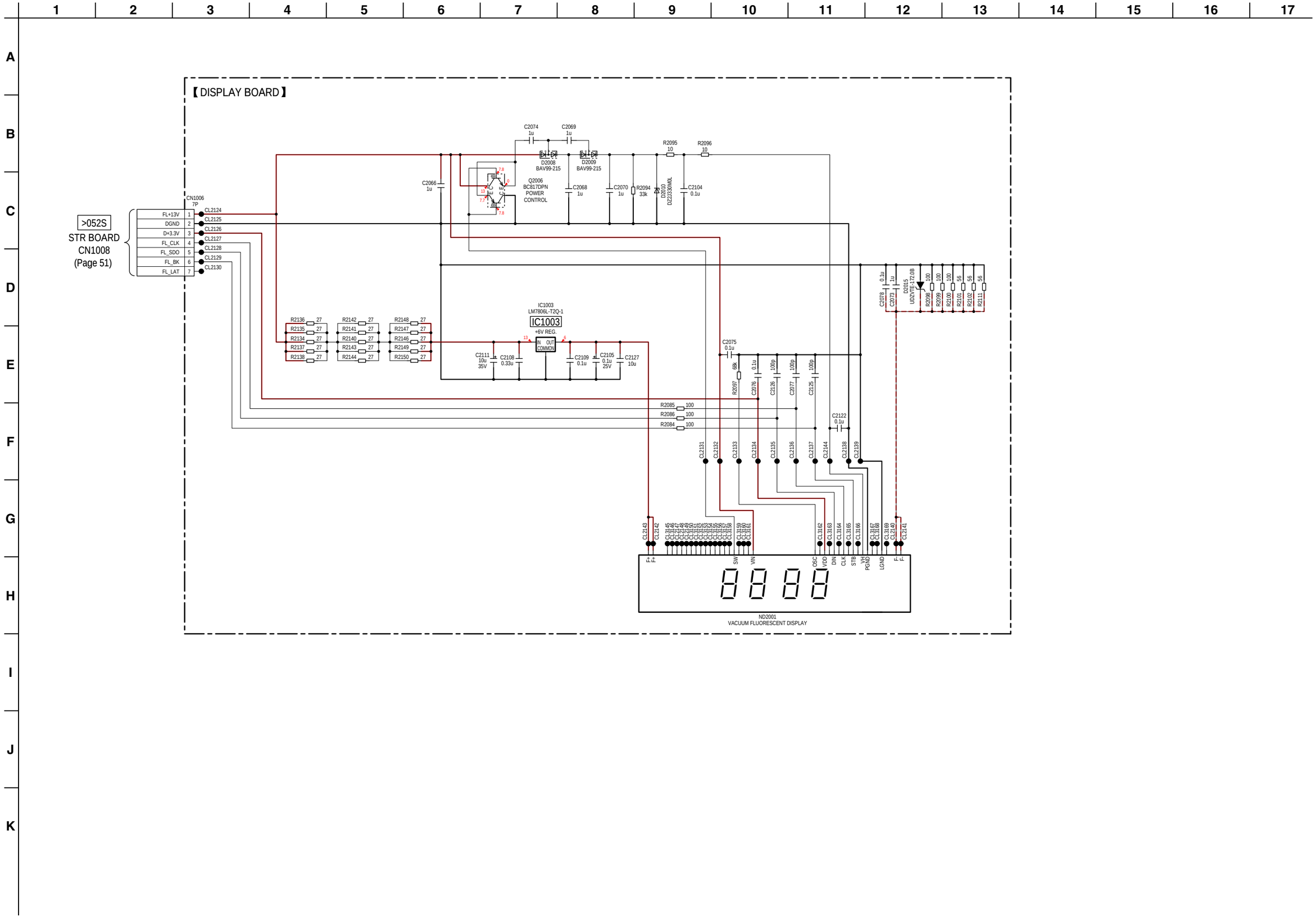

6-23. PRINTED WIRING BOARD - MIC Board -

• See page 30 for Circuit Boards Location. • : Uses unleaded solder.

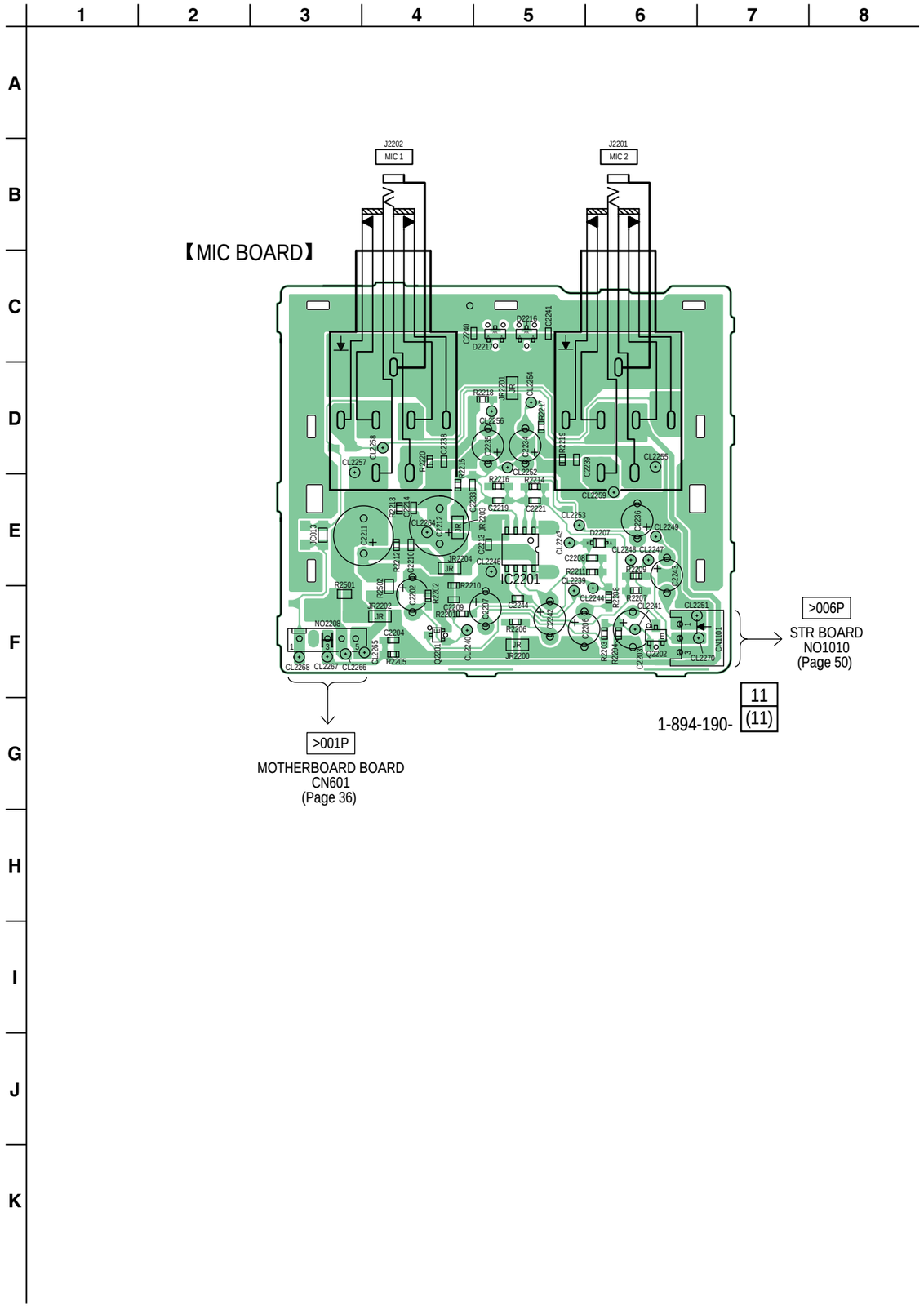

6-24. SCHEMATIC DIAGRAM - MIC Board -

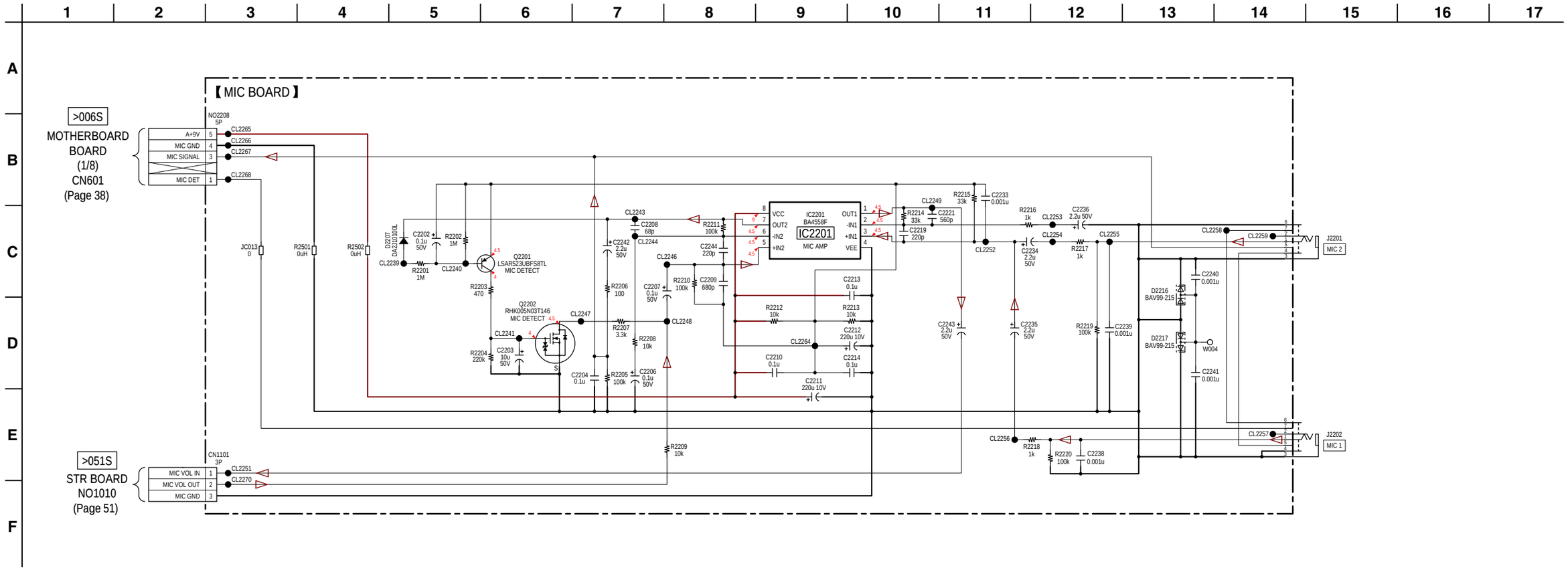

6-25. PRINTED WIRING BOARD - LED BAR Board - • See page 30 for Circuit Boards Location. • : Uses unleaded solder.

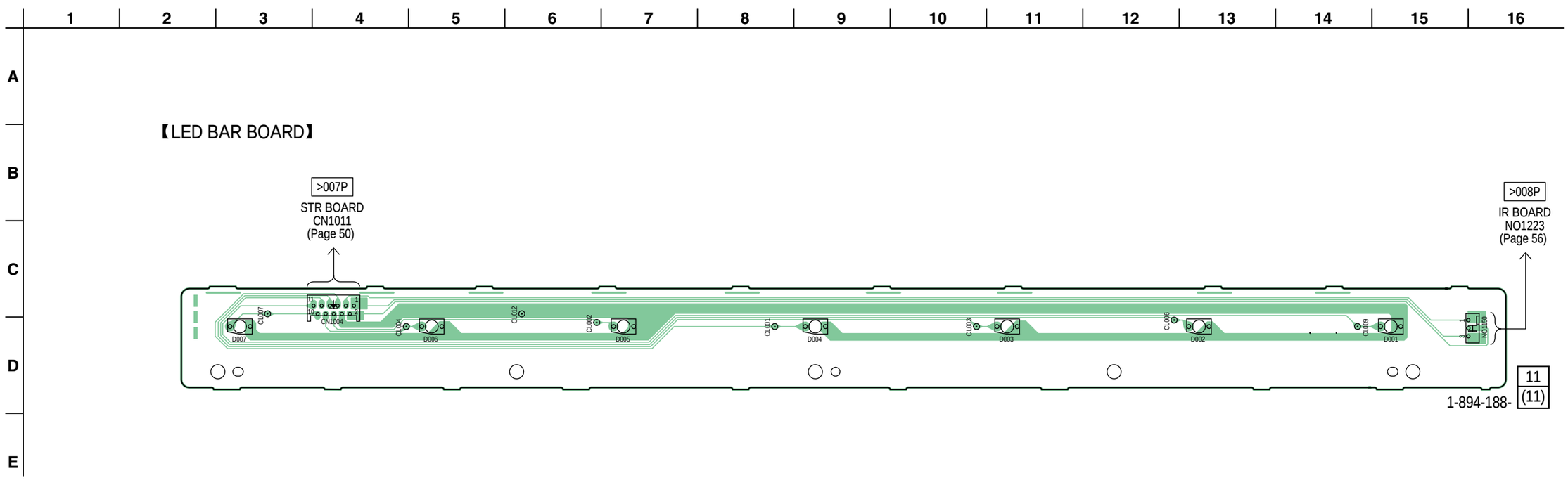

6-26. SCHEMATIC DIAGRAM - LED BAR Board -

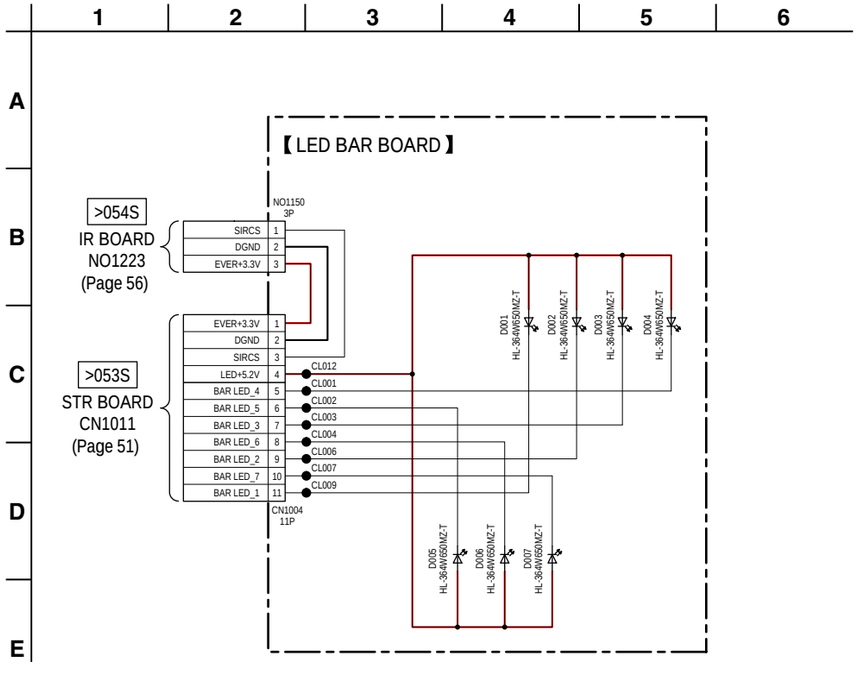

6-27. PRINTED WIRING BOARD - IR Board -

• See page 30 for Circuit Boards Location. • : Uses unleaded solder.

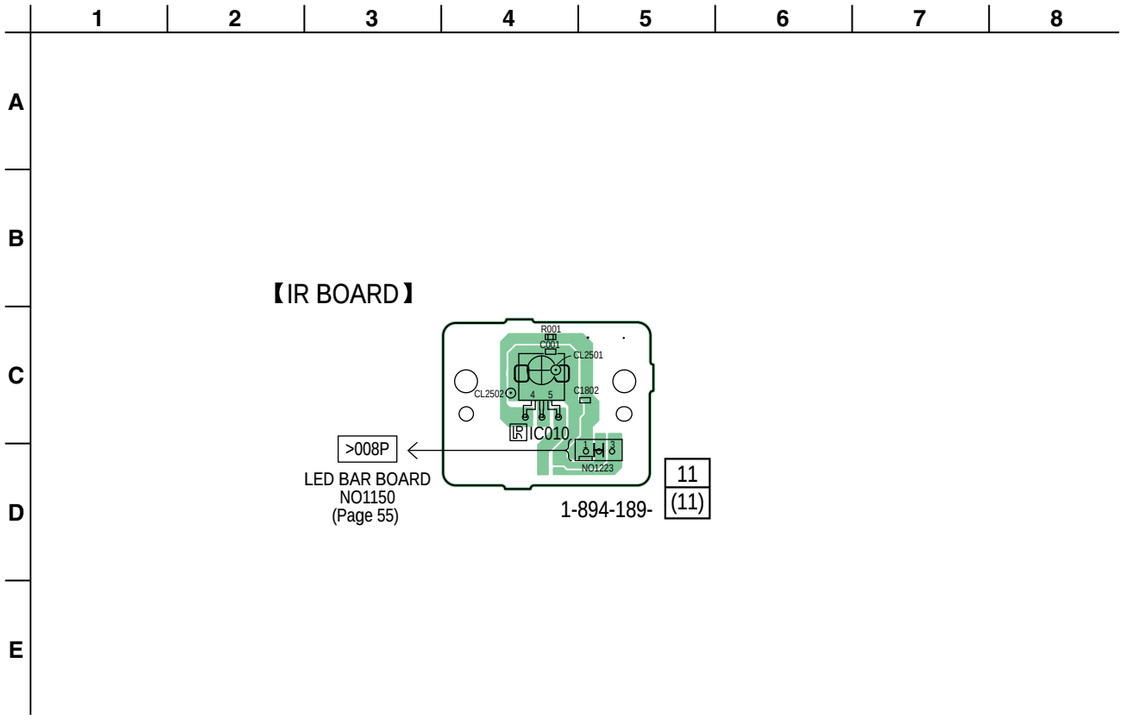

6-28. SCHEMATIC DIAGRAM - IR Board -

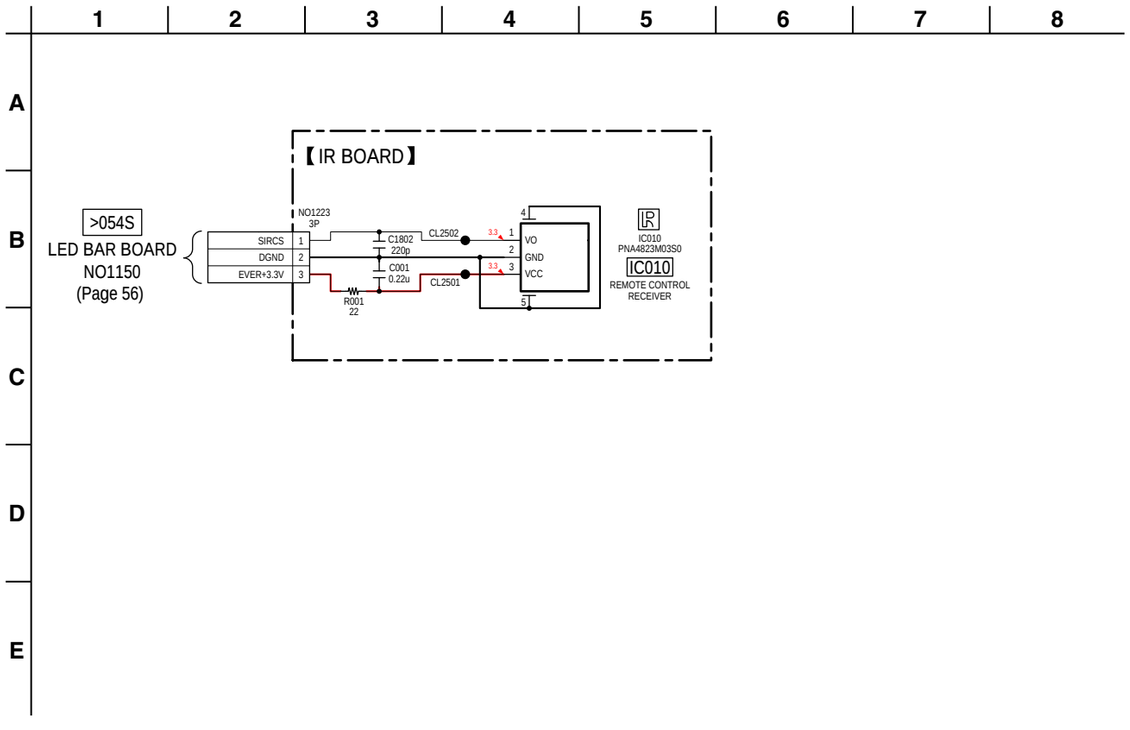

- **IC Block Diagrams**

IC1008 CXD90038ER (4CH DAMP BOARD (1/2))
IC1010 CXD90038ER (4CH DAMP BOARD (2/2)) (SHAKEX7)

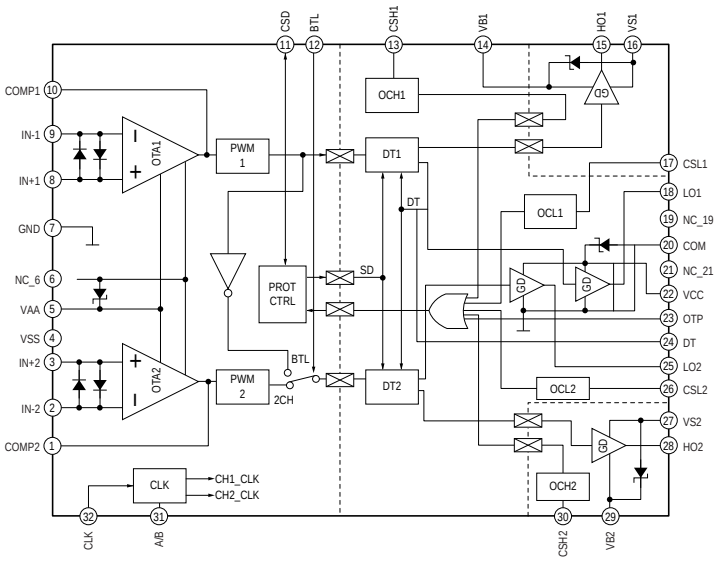

IC1009 BD34700FV-E2 (4CH DAMP BOARD (2/2))

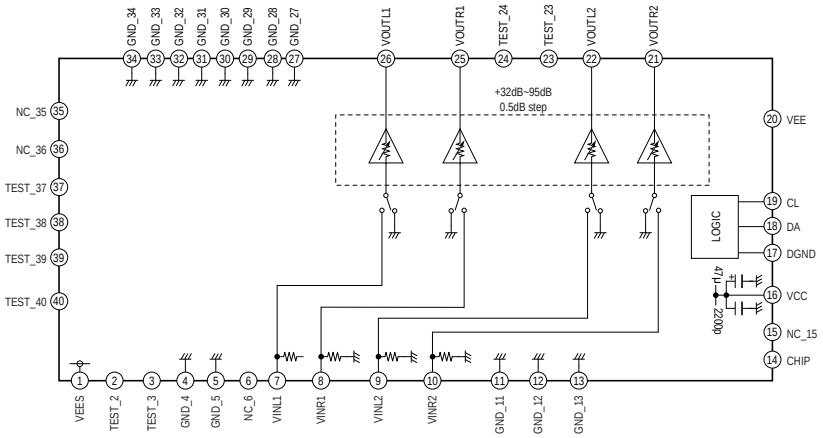

IC102 TC74VHC126FT (EK) (MOTHERBOARD BOARD (7/8))

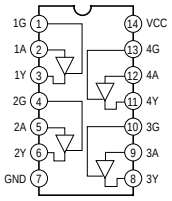

IC103 BU4229F-TR (MOTHERBOARD BOARD (7/8))

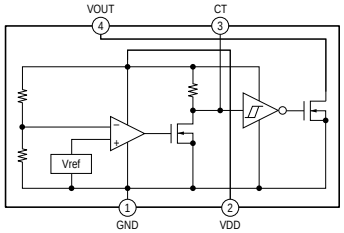

IC106 MX25L3235EM2I-10G (MOTHERBOARD BOARD (8/8))
IC302 MX25L3235EM2I-10G (MOTHERBOARD BOARD (3/8))

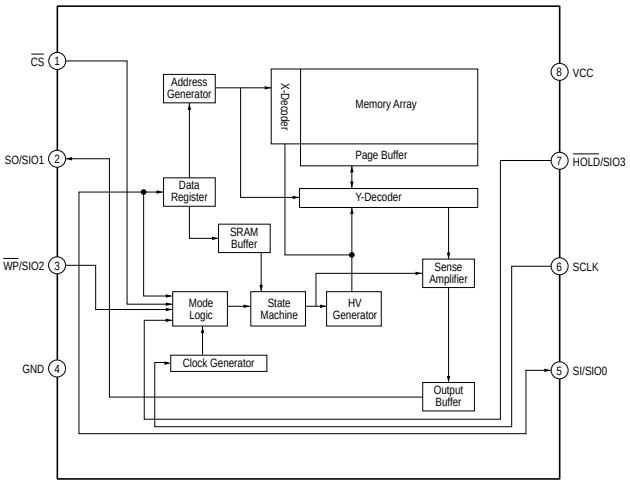

IC305 BU33TD3WG-TR (MOTHERBOARD BOARD (3/8))

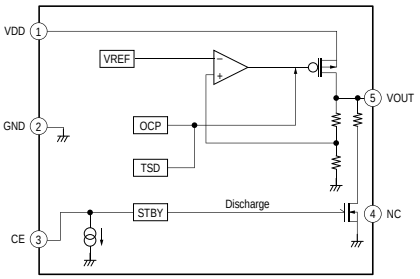

IC306 M12L64164A-7TG2Y (MOTHERBOARD BOARD (3/8))

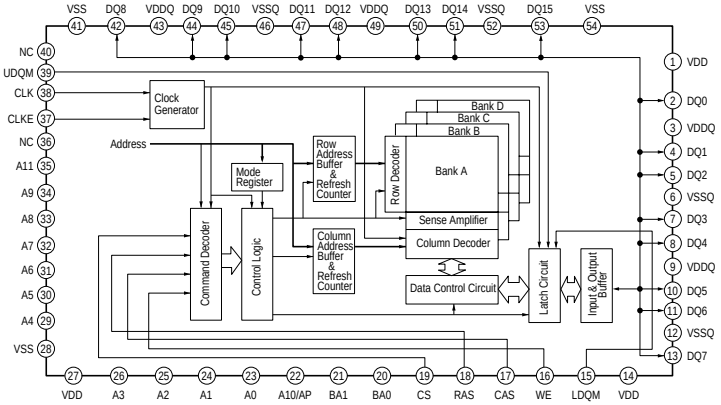

IC401 AM5890S (MOTHERBOARD BOARD (4/8))

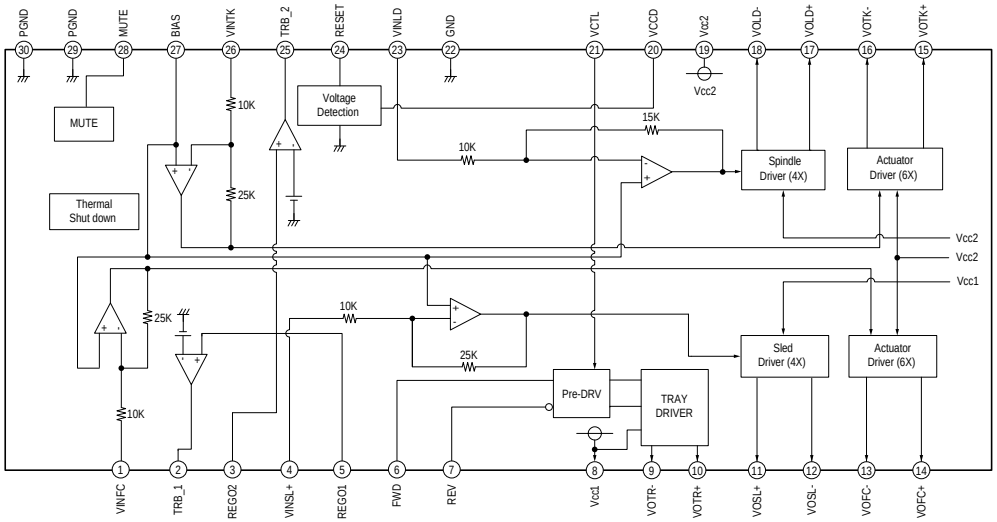

IC451 GL850G-OGY33 (MOTHERBOARD BOARD (5/8))

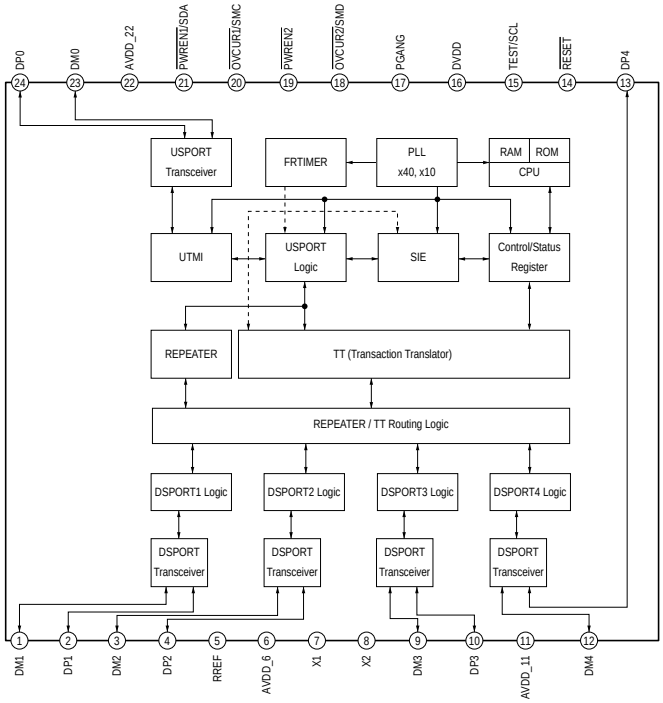

IC452 NJM2903CV (TE1) (MOTHERBOARD BOARD (5/8))

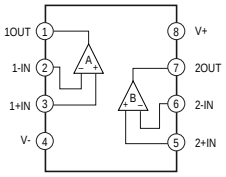

IC453 TC7USB40FT (MOTHERBOARD BOARD (5/8))

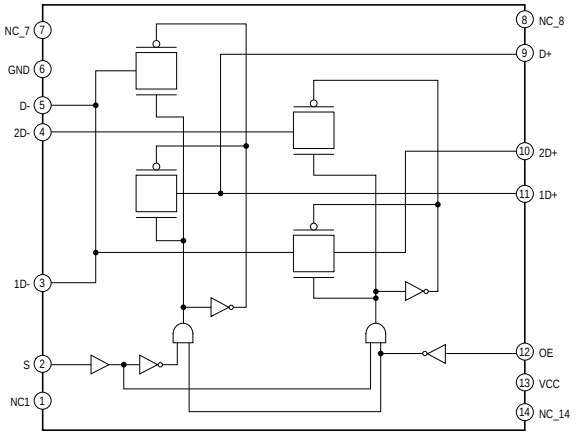

IC502 TC62D723FNG (MOTHERBOARD BOARD (2/8))
IC1001 TC62D723FNG (STR BOARD)

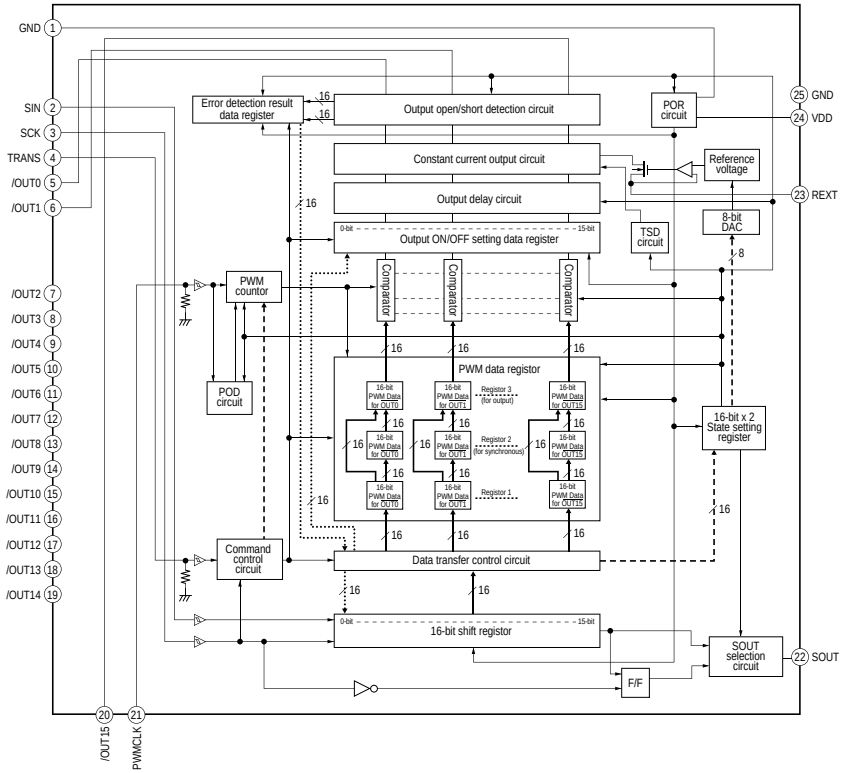

IC602, IC605 SN74LV4052APWR (MOTHERBOARD BOARD (1/8))

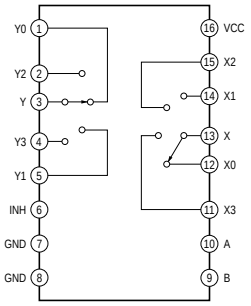

IC604 PCM1754DBQR (MOTHERBOARD BOARD (1/8))

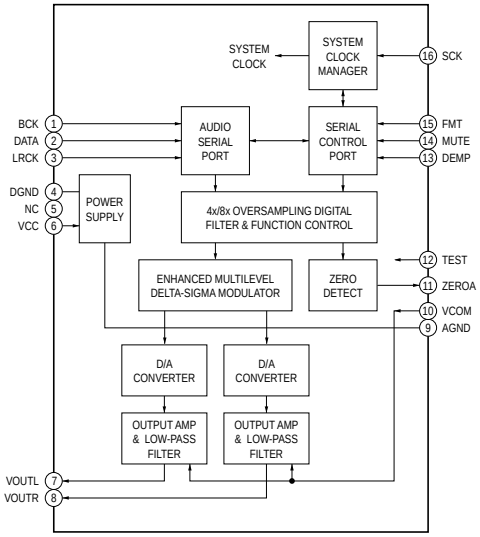

IC606, IC609 PCM1808PWR (MOTHERBOARD BOARD (1/8))

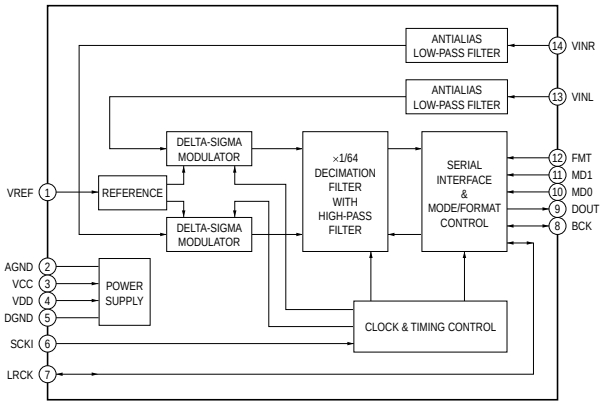

IC901 NJM41031F1 (TE2) (MOTHERBOARD BOARD (1/8))

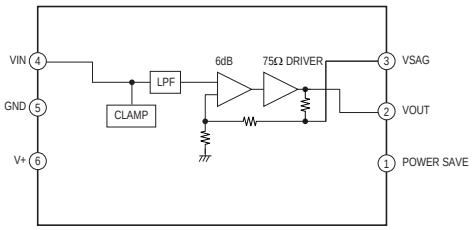

IC902 RN5B801-0002 (MOTHERBOARD BOARD (2/8))

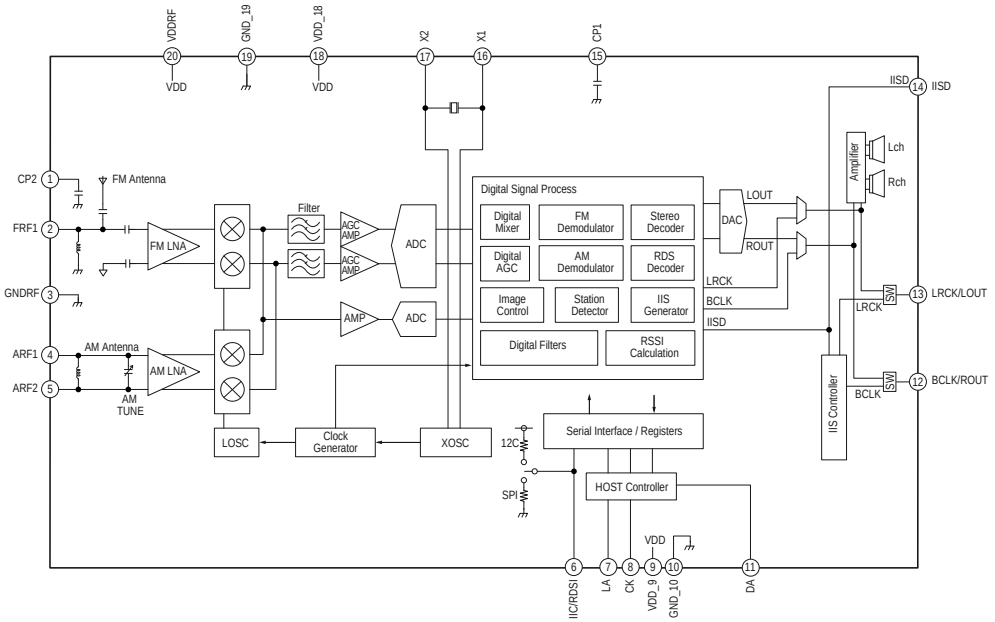

IC913 TC7WH157FK (MOTHERBOARD BOARD (2/8))

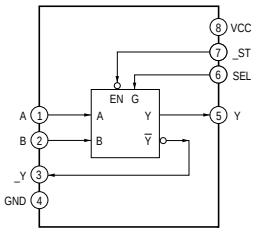

IC914 PCM5101 (MOTHERBOARD BOARD (2/8))

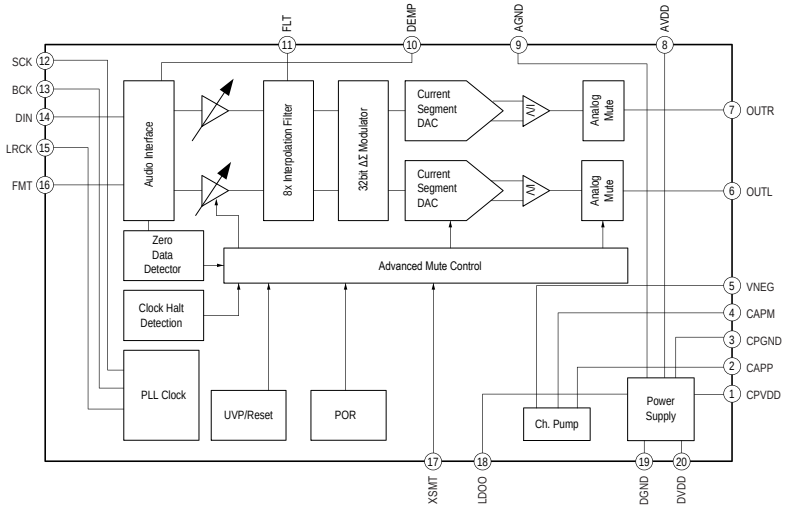

• **IC Pin Function Descriptions**

MOTHERBOARD BOARD (8/8) IC101 R7S7200032CFP-A (SYSTEM CONTROL)

Pin No.	Pin Name	I/O	Description
1	SRC-RST0	O	Not used
2	VIDEO-MUTE	O	Muting Control for Video
3	CDM-UNLOAD-SW	I	CDM UNLOAD SW
4	CDM-LOAD-SW	I	CDM LOAD SW
5	BT-RESET	O	Reset signal output to Bluetooth section
6	AC Supply Low Det	I	AC Supply Low voltage Detection
7	Vcc	-	Power supply terminal (+3.3V)
8	BT-ON	O	Bluetooth on/off control signal output terminal for bluetooth section
9	Vss	-	Ground terminal
10	TEST-MON10	O	Test port for software checking
11	PVcc	-	Power supply terminal (+3.3V)
12	NFC INT	I	NFC interrupt
13	MTK-POWER-CTRL	O	Power Control pin for MTK
14	AUDIO_CLK_OUT	O	Clock Signal from Aragon to MTK master clock
15	MTK-RESET	O	MTK Reset pin
16	MTK-BUSY	O	BUSY Signal communication between MTK
17	MTK-CLK	I	Clock Signal from MTK
18	Vss	-	Ground terminal
19	MTK-XIFCS	I	MTK CHIP SELECT
20	MTK-SDI	I	Data In Signal from MTK
21	Vcc	-	Power supply terminal (+3.3V)
22	MTK-SDO	O	Data Out Signal to MTK
23	Vss	-	Ground terminal
24	SSI3_BCKO	I	Bit clock signal from MTK to Aragon
25	PVcc	-	Power supply terminal (+3.3V)
26	SSI3_LRCKO	I	LR clock signal from MTK to Aragon
27	C-CONT	O	Trigger port to start charging of SPM
28	SSI3_DI	I	SRC from MTK to Aragon data in
29	SSI0_BCKO	O	Clock signal from Aragon to Wf DAC BCK
30	SSI0_LRCKO	O	Clock signal from Aragon to Wf DAC LRCK
31	Vss	-	Ground terminal
32	SSI0_DO	O	Data Out from Aragon to Wf DAC
33	SSI2_DO	O	Data out from Aragon to AUX OUT DAC
34	Vcc	-	Power supply terminal (+3.3V)
35	FL-CLK	O	Serial clock output to FL CIG
36	Vss	-	Ground terminal
37	CKIO	-	Not used
38	TEST-MON38	O	Test port for software checking.
39	PVcc	-	Power supply terminal (+3.3V)
40	FL-SOUT	O	Serial data output to FL CIG
41	ANALOG-ASEL	O	Multiplexer selector A for Analog input
42	ANALOG-BSEL	O	Multiplexer selector B for Analog input
43	DEBUG-TxD	O	TxD (for Debug)
44	TEST-MON44	O	Test port for software checking.
45	POWER-KEY	I	Power Key input terminal
46	Vss	-	Ground terminal
47	USB-OC	I	USB Overcurrent Detection input port
48	RGB-SOUT	O	Serial data output to RGB driver
49	TEST-MON49	O	Test port for software checking.
50	PVcc	-	Power supply terminal (+3.3V)
51	LINK-OUT-B	O	Selector B for Party Chain Signal
52	VBUS-OE	O	MTK Vbus Output enable control pin
53	NFC-RF-DET	I	NFC RF signal detection signal input from the NFC section
54	SSI1_DO	O	Data Out signal from Aragon to Tw DAC

Pin No.	Pin Name	I/O	Description
55	SSI1_DI	I	Data In Signal from ADC to Aragon
56	SD_FAST	I	SD fast detect
57	PCONT-PSAVE-PRO-TECT	O	Main power on/off control signal output “H”:power on
58	Vcc	-	Power supply terminal (+3.3V)
59	LINK-DET	I	Party Chain input bias detection pin
60	USB_HOST_SEL	O	USB update selector
61	Vss	-	Ground terminal
62	PVcc	-	Power supply terminal (+3.3V)
63	AC-CUT	I	AC off detection signal input from the reset signal IC “L”: AC Cut detected
64	DEBUG-RxD	I	RxD (for Debug)
65	BT-RxD	I	RX input signal from Bluetooth section
66	MD-CLK	O	For ARAGON internal SRC
67	RTC_X1	I	RTC clock input terminal
68	RTC_X2	O	RTC clock output terminal
69	PLLVcc	-	Power supply terminal (+3.3V)
70	EXTAL	I	System clock input terminal
71	XTAL	O	System clock output terminal
72	Vss	-	Ground terminal
73	Vss	-	Ground terminal
74	NMI	-	Non-maskable interrupt input terminal
75	Vss	-	Ground terminal
76	RES	I	Reset signal
77	PVcc	-	Power supply terminal (+3.3V)
78	AMP PROTECT	I	Combination of TEMP, PS, SD and DC protect
79	SPM-C-MON	I	Voice coil temperature monitor pin.
80	SPM-AMBIENT-TEMP	I	Ambient temperature monitor pin.
81	MODEL-DEST-IN	I	Model and Destination setting terminal (A/D input)
82	FAN-DET	I	Fan speed detection pin
83	MASTER-VOLUME	I	Jog dial pulse input from the MASTER VOLUME encoder (A/D input)
84	AD-KEY0	I	Key input terminal (A/D input)
85	AD-KEY1	I	Key input terminal (A/D input)
86	Avcc	-	Power supply terminal (+3.3V)
87	Avss	-	Ground terminal
88	Avref	-	A/D Converter reference voltage input terminal (+3.3V)
89	BSCANP	-	Boundary scan setting pin
90	PVcc	-	Power supply terminal (+3.3V)
91	AUDIO_X1	I	Audio clock input terminal
92	AUDIO_X2	O	Audio clock output terminal
93	Vss	-	Ground terminal
94	/LINE-MUTE	O	Muting Control Switch for Party Chain. “L”: mute On
95	Vcc	-	Power supply terminal (+3.3V)
96	PCONT-BTSTBY	O	BT Standby Power Control Pin. “H”: ON
97	TRST	I	Debugging interface: Initialization-signal input pin.
98	TDO	O	Debugging interface: Serial output pin for instructions and data.
99	TDI	I	Debugging interface: Serial input pin for instructions and data.
100	TMS	I	Debugging interface: Test-mode select signal input pin
101	TCK	I	Debugging interface: Test-clock input pin
102	Vss	-	Ground terminal
103	TEST-MON103/ SD_D2_0	O	Test port for software checking.
104	TEST-MON104/ SD_D3_0	O	Test port for software checking.
105	Vcc	-	Power supply terminal (+3.3V)
106	TEST-MON106/ SD_CMD_0	O	Test port for software checking.
107	Vss	-	Ground terminal

Pin No.	Pin Name	I/O	Description
108	TEST-MON108/ SD_CLK	O	Test port for software checking.
109	PVcc	-	Power supply terminal (+3.3V)
110	TEST-MON110/ SD_D0_0	O	Test port for software checking.
111	TEST-MON111/ SD_D1_0	O	Test port for software checking.
112	RGB-TRANS-LED-SPK/SD_WP_0	O	Transfer signal to RGB driver (driver for Speaker LED)
113	RGB-TRANS-LED/ SD_CD_0	O	Transfer signal to RGB driver
114	ST-RDS	I	Input for RDS Text Detect Signal (L: RDS Detect)
115	ST-CE	O	Tuner IC: Tuner enable input pin
116	Vss	-	Ground terminal
117	PCONT-DAMP	O	Digital Amp Module Power Control Pin. “H”: ON
118	RGB-PWM-CLK	O	PWM clock signal to RGB driver
119	Vcc	-	Power supply terminal (+3.3V)
120	/AMP-RESET	O	Digital Amp Reset Pin
121	Vss	-	Ground terminal
122	CD-MOTOR+	O	CDM turning motor control signal output
123	PVcc	-	Power supply terminal (+3.3V)
124	CD-MOTOR-	O	CDM turning motor control signal output
125	DIR_CP-CLK	O	DIR and CP share clock
126	DIR_CP-DATA	I/O	DIR and CP share data
127	ST-CLK	O	Tuner IC: Clock signal for IIC communication
128	ST-DATA	I/O	Tuner IC: Data signal for IIC communication
129	EVOL_CLK	O	EVOL serial clock
130	EVOL_DATA	I/O	EVOL serial data
131	NFC_CLK	O	NFC clock
132	NFC_DATA	I/O	NFC data
133	BT-TxD	O	TX signal output terminal for Bluetooth section
134	FL-LATCH	O	Data Latch signal to FL CIG
135	SIRCS	I	Remote control signal input
136	AMP-CLK-FR	O	Clock to front Amp
137	RGB-SCLK	O	Serial clock output to RGB driver
138	Vss	-	Ground terminal
139	USB_X1	I	USB clock input terminal
140	USB_X2	O	USB clock output terminal
141	USBDPVcc	-	Not used
142	USBDPVss	-	Not used
143	DM1	-	Not used
144	DP1	-	Not used
145	VBUSIN1	-	Not used
146	USBDVcc	-	Power supply terminal (+3.3V)
147	USBDPVss	-	Not used
148	USBDPVcc	-	Not used
149	USBDPVss	-	Not used
150	USB_DM0	I/O	D- PIN for USB 2.0
151	USB_DP0	I/O	D+ PIN for USB 2.0
152	VBUSIN0	-	VBus +5.0V supply monitoring pin
153	USBDVcc	-	Power supply terminal (+3.3V)
154	USBDVss	-	Ground terminal
155	REFRIN	-	Reference input
156	USBAPVss	-	Ground terminal
157	USBAPVcc	-	Power supply terminal (+3.3V)
158	USBAVcc	-	Power supply terminal (+3.3V)
159	USBAVss	-	Ground terminal

Pin No.	Pin Name	I/O	Description
160	USBUVcc	-	Power supply terminal (+3.3V)
161	USBUVss	-	Not used
162	Vss	-	Ground terminal
163	Vss	-	Ground terminal
164	ANALOG-CSEL	O	Multiplexer selector C for Analog input
165	SS-DET	I	Speaker detection pin. “L”: Speaker detected
166	Q-Flash-SIO2	I/O	QSPI: Data I/O pins for channel 0
167	Q-Flash-SIO3	I/O	QSPI: Data I/O pins for channel 0
168	Q-Flash-CLK	O	Clock signal to QSPI
169	Q-Flash-CS	O	Slave select pin to QSPI
170	Q-Flash-SIO0	I/O	QSPI: Data I/O pins for channel 0
171	Vss	-	Ground terminal
172	Q-Flash-SIO1	I	QSPI: Data I/O pins for channel 0
173	MIC-DETECT	I	Mic Input Detection pin. “H”: Mic detected
174	PVcc	-	Power supply terminal (+3.3V)
175	LINK-SET	O	Party Chain output bias pin
176	LINK-OUT-A	O	Selector A for Party Chain Signal

MOTHERBOARD BOARD (3/8) IC301 CXD9990R (CD RF AMP FOCUS/TRACKING ERROR AMP CD SYSTEM PROCESSOR DIGITAL SERVO PROCESSOR)

Pin No.	Pin Name	I/O	Description
1	RF_C	I	RF main beam C input from the optical pick-up block
2	RF_D	I	RF main beam D input from the optical pick-up block
3	RF_E	I	RF sub beam E input from the optical pick-up block
4	RF_F	I	RF sub beam F input from the optical pick-up block
5	AVDD12_2	-	Power supply terminal (+1.2V) (for analog system)
6	AVDD33_1	-	Power supply terminal (+3.3V) (for analog system)
7	XTALI	I	System clock input terminal (27 MHz)
8	XTALO	O	System clock output terminal (27 MHz)
9	AGND33	-	Ground terminal (for analog system)
10	V20	O	Reference voltage (+2V) output to the optical pick-up block
11	V14/VREF0	O	Reference voltage (+1.4V) output to the coil/motor driver
12	REXT	I	Current reference input terminal
13	MDI1	I	Laser power monitor input from the optical pick-up block
14	LDO1	O	Laser diode drive signal output to the optical pick-up block (for CD)
15	LDO2	O	Laser diode drive signal output to the optical pick-up block (for DVD)
16	AVDD33_2	-	Power supply terminal (+3.3V) (for analog system)
17	DMO	O	Spindle motor control signal output to the motor driver
18	FMO	O	Sled motor control signal output to the motor driver
19	CD_VR	O	Variable resistor control signal output to the optical pick-up block (for CD)
20	DVD_VR	O	Variable resistor control signal output to the optical pick-up block (for DVD)
21	TRO	O	Tracking coil control signal output to the coil/motor driver
22	FOO	O	Focus coil control signal output to the coil/motor driver
23	MSW	O	CD/DVD selection signal output terminal “L”: DVD, “H”: CD
24	USB_DM	I/O	Two-way USB data (–) bus terminal
25	USB_DP	I/O	Two-way USB data (+) bus terminal
26	VDD33_USB	-	Power supply terminal (+3.3V) (for USB)
27	VSS33_USB	-	Ground terminal (for USB)
28	PAD_VRT	I/O	USB generating reference current terminal
29	VDD12_USB	-	Power supply terminal (+1.2V) (for USB)
30	SF_CS#	O	Chip select signal output to the serial flash
31	SF_DO	O	Serial data output to the serial flash
32	SF_DI	I	Serial data input from the serial flash
33	SF_CK	O	Serial clock signal output to the flash ROM
34	IFSCK	O	Serial data transfer clock signal output to the system controller
35	IFSDO	O	Serial data output to the system controller
36	RX	I	Serial data input terminal for flash writing
37	TX	O	Serial data output terminal for flash writing
38	PRST#	I	Reset signal input from the system controller “L”: reset
39	NC	-	Not used
40	IFSDI	I	Serial data input from the system controller
41	IFBSY	I	Communication initialization request signal input from the system controller
42	IFCS#	O	Communication initialization request acknowledge signal output to the system controller
43	MFISW	-	Not used
44	LIMITSW	-	Not used
45	MUTE	O	Muting signal output to the coil/motor driver (for focus/tracking coil and sled motor)
46	EEWP	-	Not used
47	SDA	I/O	Two-way I2C data signal with the EEPROM
48	SCL	I/O	Two-way I2C clock signal with the EEPROM
49	NC	-	Not used
50	DVSS33	-	Ground terminal (for digital system)
51	DVDD33	-	Power supply terminal (+3.3V) (for digital system)
52	RD0	I/O	Two-way data bus with the SD-RAM
53	RD1	I/O	Two-way data bus with the SD-RAM
54	RD2	I/O	Two-way data bus with the SD-RAM

Pin No.	Pin Name	I/O	Description
55	RD3	I/O	Two-way data bus with the SD-RAM
56	DVDD12	-	Power supply terminal (+1.2V) (for digital system)
57	RD4	I/O	Two-way data bus with the SD-RAM
58	RD5	I/O	Two-way data bus with the SD-RAM
59	RD6	I/O	Two-way data bus with the SD-RAM
60	RD7	I/O	Two-way data bus with the SD-RAM
61	DQM0	O	Data mask signal output to the SD-RAM
62	RD15	I/O	Two-way data bus with the SD-RAM
63	RD14	I/O	Two-way data bus with the SD-RAM
64	RD13	I/O	Two-way data bus with the SD-RAM
65	RD12	I/O	Two-way data bus with the SD-RAM
66	RD11	I/O	Two-way data bus with the SD-RAM
67	RD10	I/O	Two-way data bus with the SD-RAM
68	RD9	I/O	Two-way data bus with the SD-RAM
69	RD8	I/O	Two-way data bus with the SD-RAM
70	DQM1	O	Data mask signal output to the SD-RAM
71	DVDD33	-	Power supply terminal (+3.3V) (for digital system)
72	RCLK	O	Clock signal output to the SD-RAM
73	RA11	O	Address signal output to the SD-RAM
74	RA9	O	Address signal output to the SD-RAM
75	RA8	O	Address signal output to the SD-RAM
76	RA7	O	Address signal output to the SD-RAM
77	RA6	O	Address signal output to the SD-RAM
78	RA5	O	Address signal output to the SD-RAM
79	RA4	O	Address signal output to the SD-RAM
80	RWE#	O	Write enable signal output to the SD-RAM
81	DVSS12	-	Ground terminal (for digital system)
82	CAS#	O	Column address strobe signal output to the SD-RAM
83	RAS#	O	Row address strobe signal output to the SD-RAM
84	DVDD33	-	Power supply terminal (+3.3V) (for digital system)
85	BA0	O	Bank address signal output to the SD-RAM
86	BA1	O	Bank address signal output to the SD-RAM
87	DVDD12	-	Power supply terminal (+1.2V) (for digital system)
88	RA10	O	Address signal output to the SD-RAM
89	RA0	O	Address signal output to the SD-RAM
90	RA1	O	Address signal output to the SD-RAM
91	RA2	O	Address signal output to the SD-RAM
92	RA3	O	Address signal output to the SD-RAM
93	SPDIF	-	Not used
94	XMAMUTE	-	Not used
95	NC	-	Not used
96	DACVDDC	-	Power supply terminal (+3.3V) (for D/A converter)
97	VREF	I	Band gap reference voltage terminal
98	FS	I	Full scale adjustment terminal
99	DACVSSC	-	Ground terminal (for D/A converter)
100	CVBS	O	Composite video signal output terminal
101	DACVDDB	-	Power supply terminal (+3.3V) (for D/A converter)
102	SY/Y/G	-	Not used
103	SC/CB/B	-	Not used
104	CR/R	-	Not used
105	AADVSS	-	Ground terminal (for A/D converter)
106	ADIN	I	Audio data input from the A/D converter
107	NC	-	Not used
108	NC	-	Not used
109	AADVDD	-	Power supply terminal (+3.3V) (for A/D converter)
110	ADACVSS2	-	Ground terminal (for D/A converter)

Pin No.	Pin Name	I/O	Description
111	ADACVSS1	-	Ground terminal (for D/A converter)
112	ACLK	O	Master clock signal output
113	ABCK	O	Bit clock signal output
114	NC	-	Not used
115	AVCM	I	Audio D/A converter reference voltage terminal
116	NC	-	Not used
117	ALRCK	O	L/R sampling clock signal output
118	ASDATA0	O	Audio data output
119	ADACVDD1	-	Power supply terminal (+3.3V) (for D/A converter)
120	ADACVDD2	-	Power supply terminal (+3.3V) (for D/A converter)
121	AVDD12_1	-	Power supply terminal (+1.2V) (for analog system)
122	AGND12	-	Ground terminal (for analog system)
123	RFIP	I	AC coupled RF signal input from the optical pick-up block
124	OPDIST	I	Optical pick-up block type selection
125	IOPMON/OPO	I	Power monitor terminal
126	SPFG/OP	I	Spindle motor hall sensor input from the motor driver
127	RF_A	I	RF main beam A input from the optical pick-up block
128	RF_B	I	RF main beam B input from the optical pick-up block

SECTION 7
EXPLODED VIEWS

Note:
- The mechanical parts with no reference number in the exploded views are not supplied.
- Items marked "*" are not stocked since they are seldom required for routine service.
  Some delay should be anticipated when ordering these items.
- -XX and -X mean standardized parts, so they may have some difference from the original one.
- Abbreviation
  AR : Argentina model
  AUS : Australian model
  E4 : African model
  E12 : 220 – 240 V AC area in E models
  EA : Saudi Arabia model
  LA9 : Latin-American model
  MY : Malaysia model
  RU : Russian model
  TH : Thai model

The components identified by mark ⚠ or dotted line with mark ⚠ are critical for safety.
Replace only with part number specified.

7-1. PANEL, SIDE SECTION

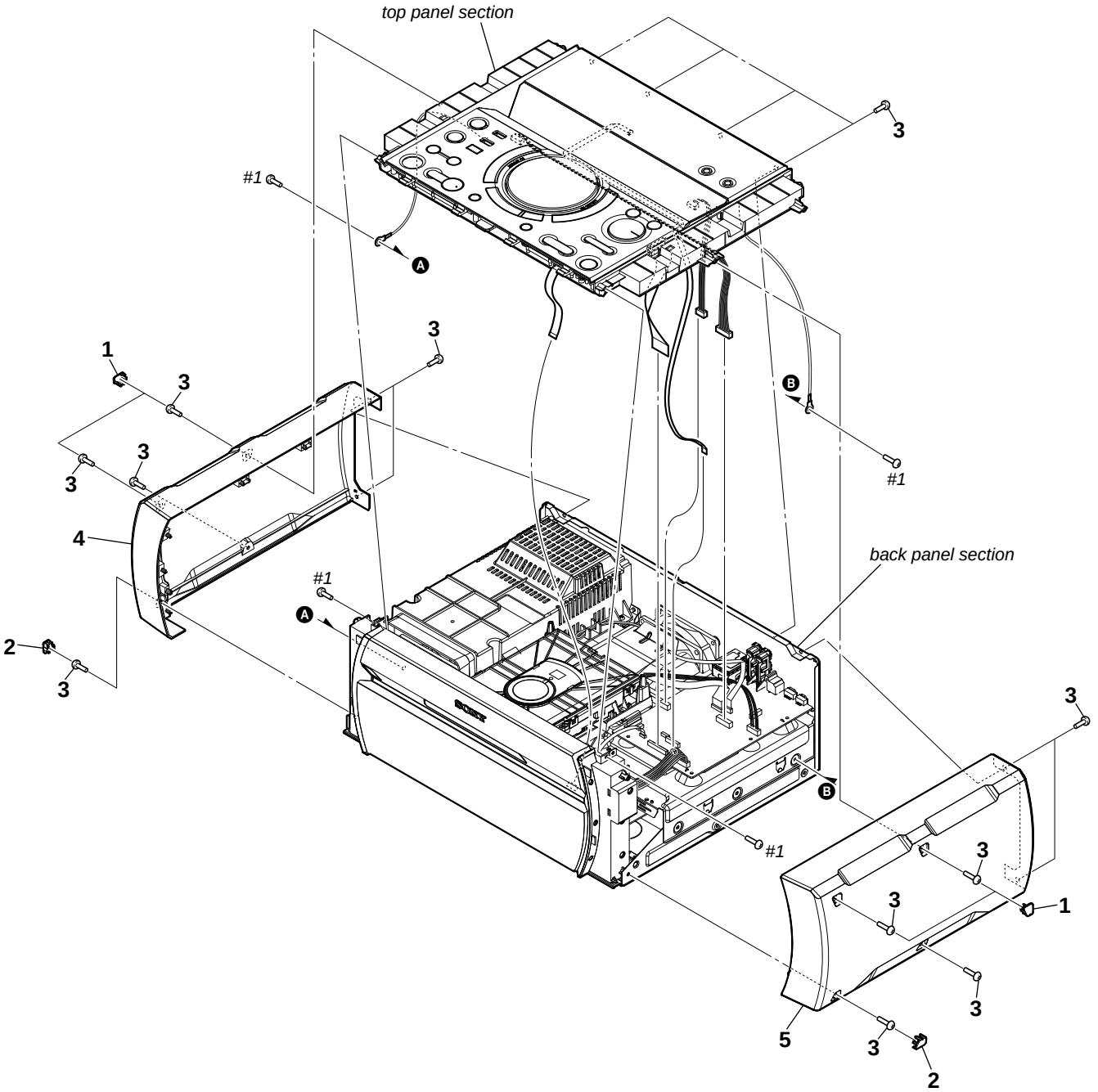

Ref. No.	Part No.	Description	Remark
1	4-558-956-01	COVER SCREW A	
2	4-558-957-01	COVER SCREW B	
3	4-162-271-01	SCREW, TAPPING	
4	4-548-124-01	PANEL, SIDE (L)	
5	4-548-125-01	PANEL, SIDE (R)	
#1	7-685-646-71	SCREW +BVTP 3X8 TYPE2 IT-3	

7-2. BACK PANEL SECTION

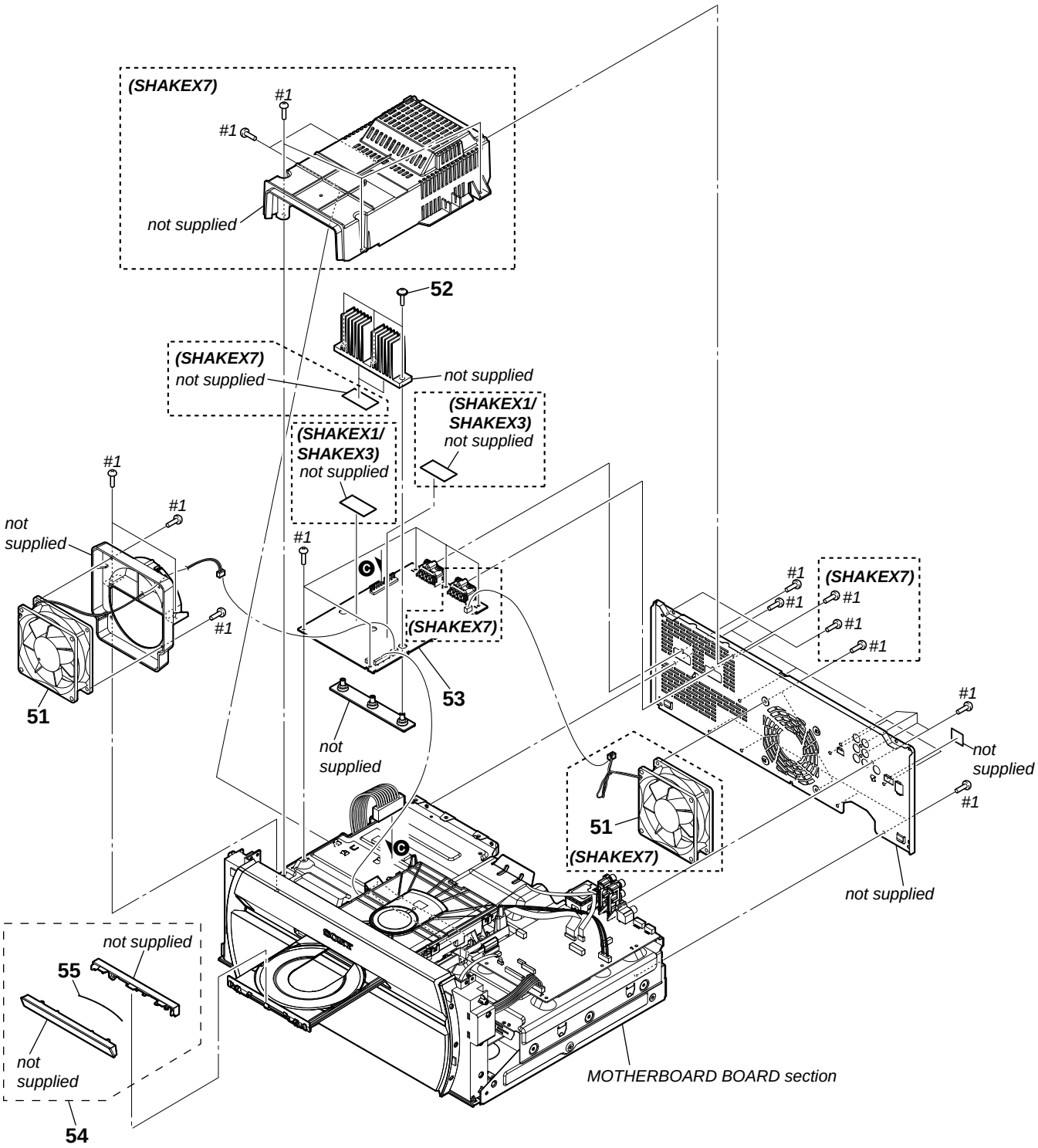

Ref. No.	Part No.	Description	Remark
⚠ 51	1-855-340-11	DC FAN	
52	4-435-965-01	SCREW+PTPWH 2.6XL (DIA8.0)	
53	A-2061-403-A	4CH DAMP BOARD, COMPLETE (SHAKEX7)	
53	A-2061-407-A	4CH DAMP BOARD, COMPLETE (SHAKEX1/SHAKEX3)	
54	X-2590-779-1	PANEL, LOADING ASSY	
55	4-295-431-01	SPRING, LOADING	
#1	7-685-646-71	SCREW +BVTP 3X8 TYPE2 IT-3	

7-3. MOTHERBOARD BOARD SECTION

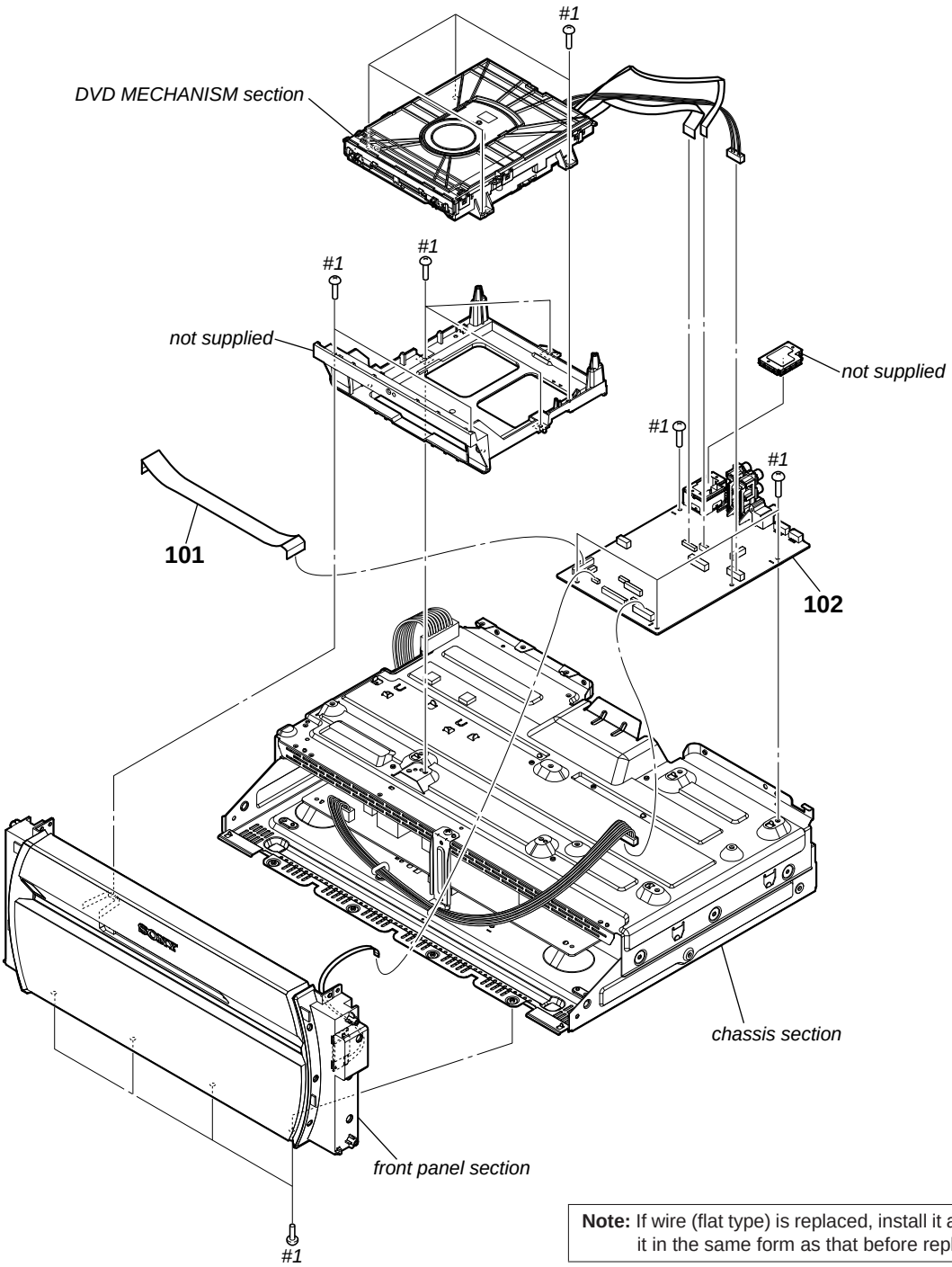

Note: If wire (flat type) is replaced, install it after bending it in the same form as that before replacement.

Ref. No.	Part No.	Description	Remark
101	1-828-372-12	WIRE (FLAT TYPE) (21 CORE)	
102	A-2074-163-A	MOTHERBOARD BOARD, COMPLETE (for SERVICE) (SHAKEX7: AR, LA9)	
102	A-2074-164-A	MOTHERBOARD BOARD, COMPLETE (for SERVICE) (SHAKEX7: MY, TH)	
102	A-2074-165-A	MOTHERBOARD BOARD, COMPLETE (for SERVICE) (SHAKEX7: E4, EA)	
102	A-2074-166-A	MOTHERBOARD BOARD, COMPLETE (for SERVICE) (SHAKEX3: AR, LA9)	
102	A-2074-168-A	MOTHERBOARD BOARD, COMPLETE (for SERVICE) (SHAKEX3: AEP, UK)	
102	A-2074-169-A	MOTHERBOARD BOARD, COMPLETE (for SERVICE) (SHAKEX3: RU)	
102	A-2074-170-A	MOTHERBOARD BOARD, COMPLETE (for SERVICE) (SHAKEX3: MY, TH)	
102	A-2074-171-A	MOTHERBOARD BOARD, COMPLETE (for SERVICE) (SHAKEX3: E4, EA)	
102	A-2077-950-A	MOTHERBOARD BOARD, COMPLETE (for SERVICE) (SHAKEX1: AEP, UK)	
102	A-2077-951-A	MOTHERBOARD BOARD, COMPLETE (for SERVICE) (SHAKEX1: RU)	
102	A-2077-952-A	MOTHERBOARD BOARD, COMPLETE (for SERVICE) (SHAKEX1: AUS)	
102	A-2077-953-A	MOTHERBOARD BOARD, COMPLETE (for SERVICE) (SHAKEX1: MY, TH)	
102	A-2077-954-A	MOTHERBOARD BOARD, COMPLETE (for SERVICE) (SHAKEX1: E4, EA)	
102	A-2077-955-A	MOTHERBOARD BOARD, COMPLETE (for SERVICE) (SHAKEX7: E12)	
102	A-2077-957-A	MOTHERBOARD BOARD, COMPLETE (for SERVICE) (SHAKEX1: AR, LA9)	
102	A-2084-481-A	MOTHERBOARD BOARD, COMPLETE (for SERVICE) (SHAKEX3: AUS)	
#1	7-685-646-71	SCREW +BVTP 3X8 TYPE2 IT-3	

7-4. FRONT PANEL SECTION

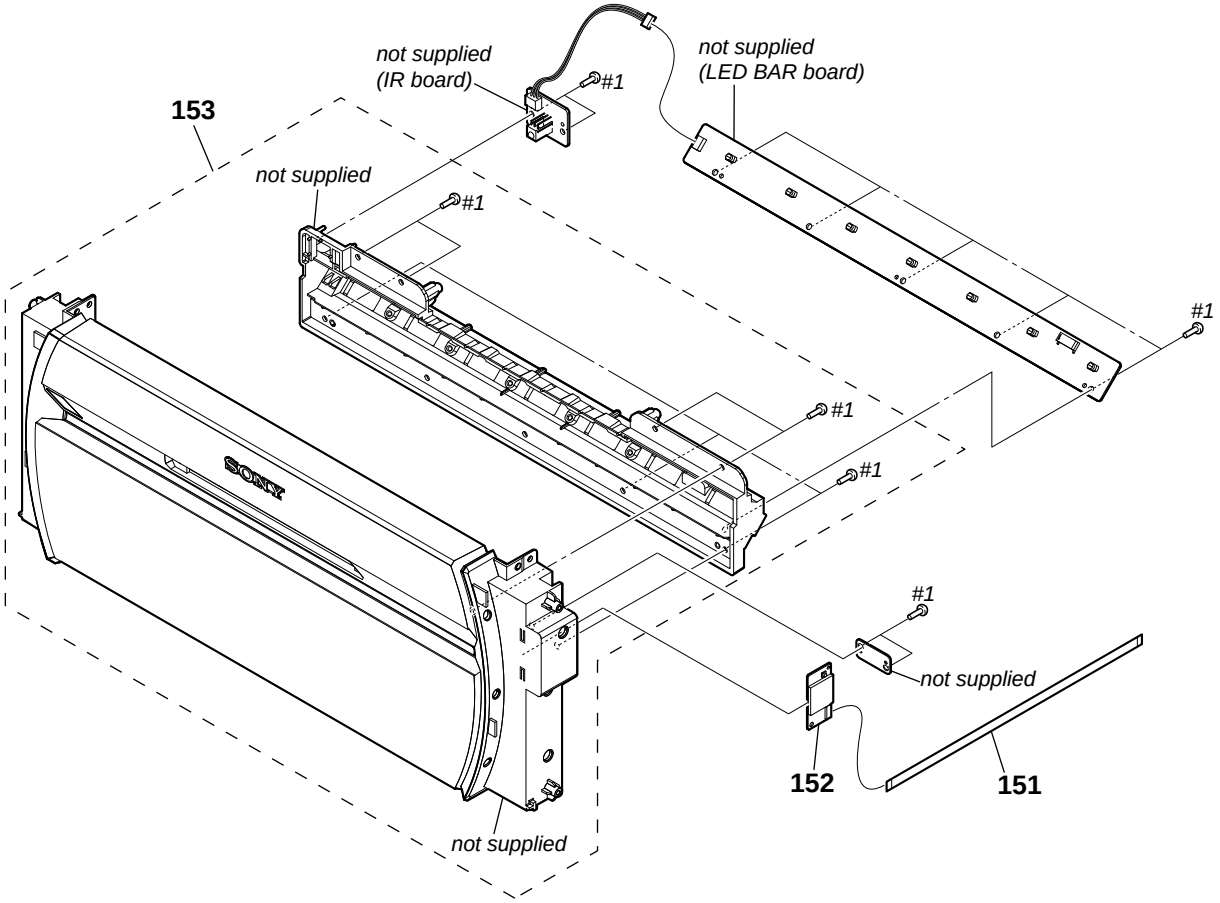

Ref. No.	Part No.	Description	Remark
151	1-828-701-51	WIRE (FLAT TYPE) (10 CORE)	
152	1-492-699-11	BLUETOOTH MODULE	
153	X-2590-776-2	PANEL, FRONT ASSY (RYU) (SHAKEX7)	
153	X-2590-777-2	PANEL, FRONT ASSY (RAI) (SHAKEX3)	
153	X-2591-509-2	PANEL, FRONT ASSY (TETSU) (SHAKEX1)	
#1	7-685-646-71	SCREW +BVTP 3X8 TYPE2 IT-3	

7-5. CHASSIS SECTION

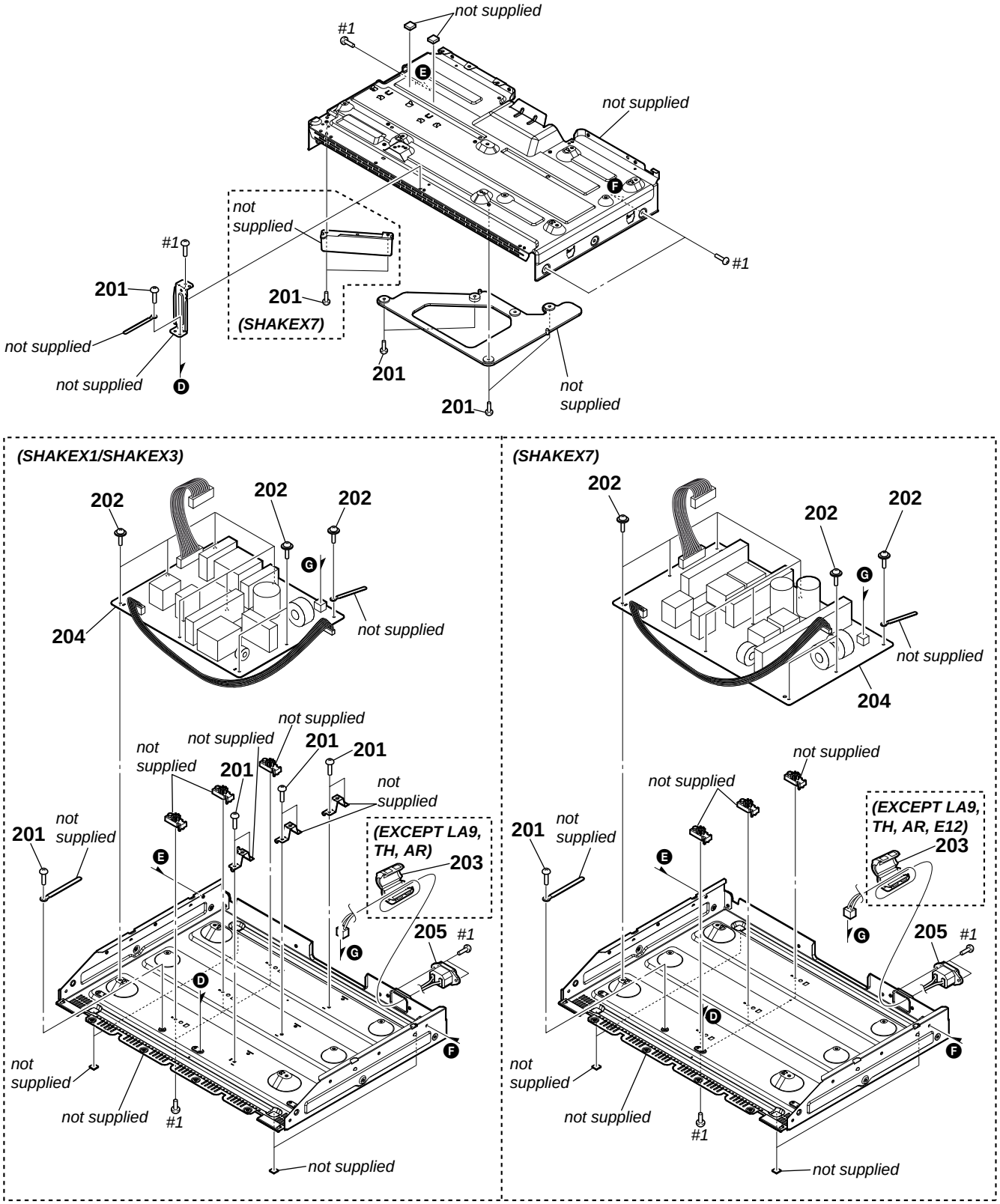

Ref. No.	Part No.	Description	Remark
201	3-077-331-21	+BV3 (3-CR)	
202	2-677-839-01	+PWH 3X8 (SUMITITE)	
203	1-457-369-12	CORE, FERRITE (EXCEPT LA9, TH, AR, E12)	
⚠ 204	1-474-607-11	SWITCHING REGULATOR (SHAKEX7)	
⚠ 204	1-474-608-21	REGULATOR, SWITCHING (SSN-152AD) (SHAKEX1/SHAKEX3)	
⚠ 205	1-844-220-11	AC INLET	
#1	7-685-646-71	SCREW +BVTP 3X8 TYPE2 IT-3	

7-6. TOP PANEL SECTION

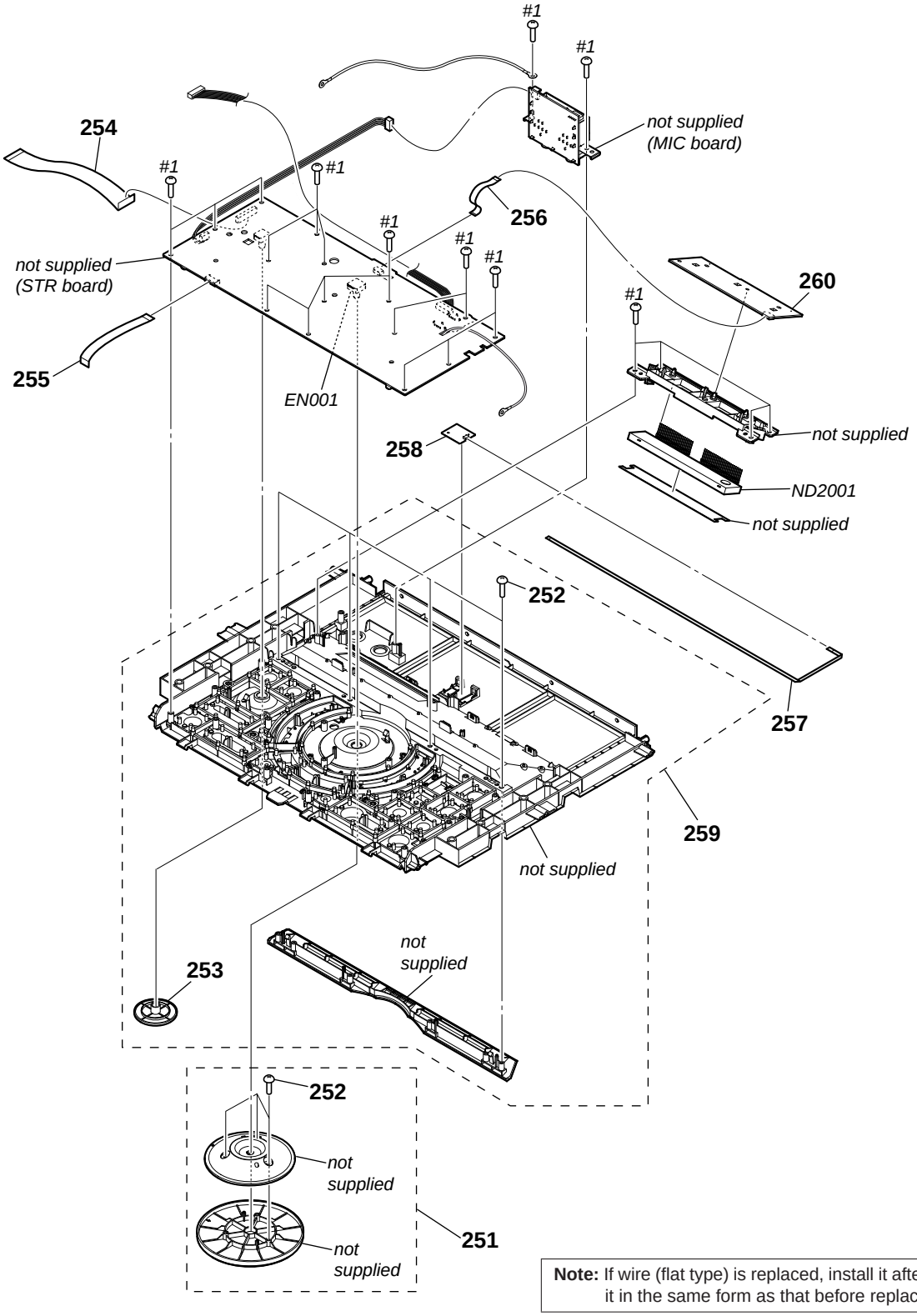

Note: If wire (flat type) is replaced, install it after bending it in the same form as that before replacement.

Ref. No.	Part No.	Description	Remark
251	X-2590-783-1	KNOB, VOLUME ASSY	
252	3-087-053-01	+BVTP2.6 (3CR)	
253	4-548-135-01	KNOB, MIC	
254	1-828-370-21	WIRE (FLAT TYPE) (21 CORE)	
255	1-828-319-21	WIRE (FLAT TYPE) (11 CORE)	
256	1-828-297-21	WIRE (FLAT TYPE) (7 CORE)	
257	1-846-749-11	WIRE (FLAT TYPE) (6 CORE)	

Ref. No.	Part No.	Description	Remark
258	8-989-602-00	RC-S730 (WW)	
259	X-2590-778-3	PANEL, TOP ASSY (SHAKEX3/SHAKEX7)	
259	X-2591-613-2	PANEL, TOP ASSY (TETSU) (SHAKEX1)	
260	A-2061-685-A	DISPLAY BOARD, COMPLETE	
EN001	1-493-008-11	ENCODER, ROTARY (VOLUME/MULTI CONTROL)	
ND2001	1-483-519-11	VACUUM FLUORESCENT DISPLAY	
#1	7-685-646-71	SCREW +BVTP 3X8 TYPE2 IT-3	

7-7. DVD MECHANISM SECTION (CDM90-DVBU204//M)

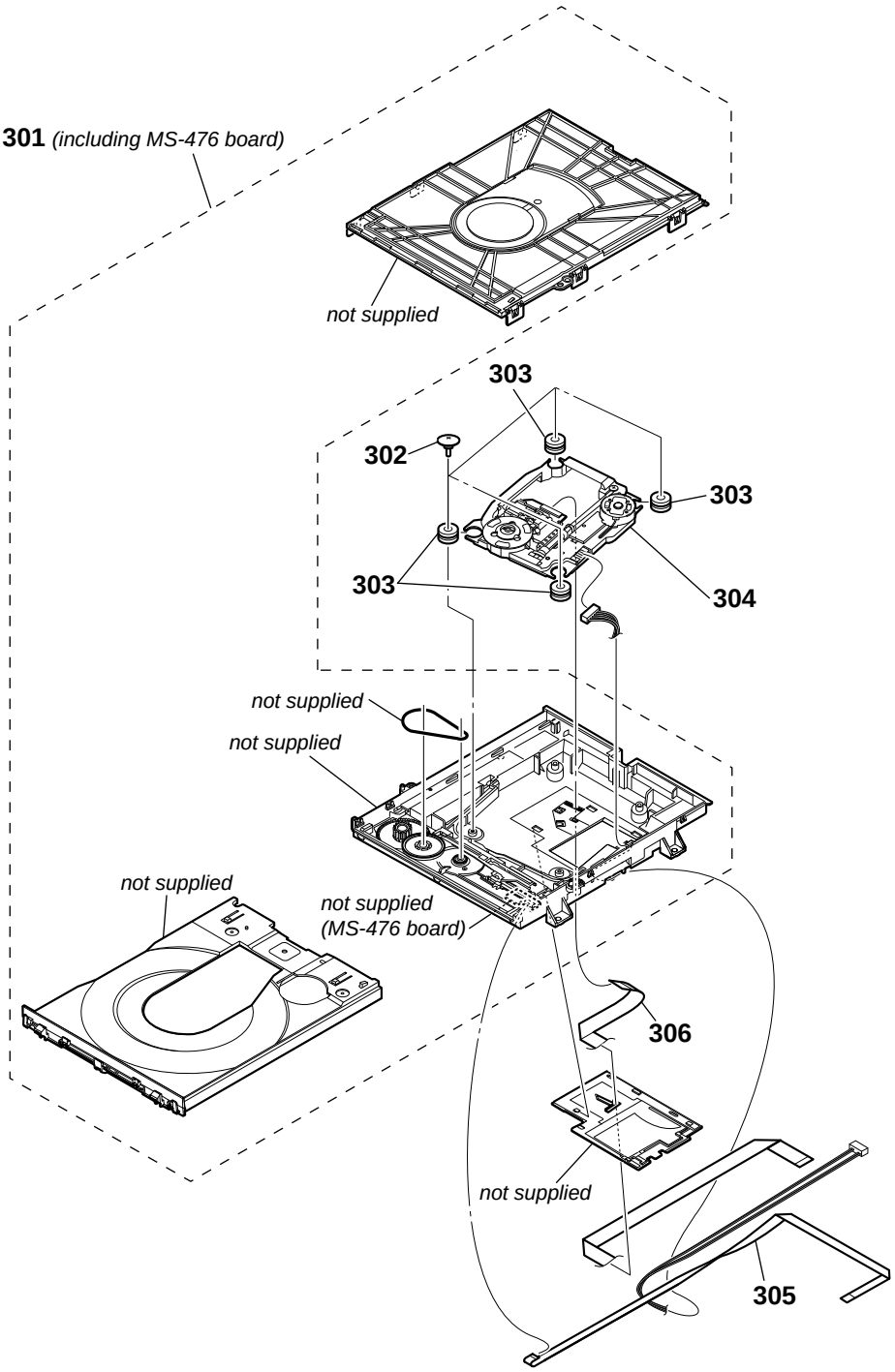

Note: If cable, flexible flat and wires (flat type) is replaced, install it after bending it in the same form as that before replacement.

Ref. No.	Part No.	Description	Remark
301	A-1896-391-B	LOADING COMPLETE ASSY (T) (including MS-476 board)	
302	3-087-599-01	INSULATOR SCREW	
303	2-634-618-21	INSULATOR	
⚠ 304	A-2046-956-A	SERVICE, OPTICAL DEVICE (7G)	
305	1-828-293-12	WIRE (FLAT TYPE) (5 CORE)	
306	1-846-951-11	CABLE, FLEXIBLE FLAT (24 CORE)	

SECTION 8
ELECTRICAL PARTS LIST

Note:
- Due to standardization, replacements in the parts list may be different from the parts specified in the diagrams or the components used on the set.
- -XX and -X mean standardized parts, so they may have some difference from the original one.
- RESISTORS
  All resistors are in ohms.
  METAL: Metal-film resistor.
  METAL OXIDE: Metal oxide-film resistor.
  F: nonflammable
- Items marked "*" are not stocked since they are seldom required for routine service.
  Some delay should be anticipated when ordering these items.
- SEMICONDUCTORS
  In each case, u: µ, for example:
  uA. . : µA. . , uPA. . , µPA. . ,
  uPB. . : µPB. . , uPC. . , µPC. . ,
  uPD. . : µPD. .
- CAPACITORS
  uF: µF
- COILS
  uH: µH
- Abbreviation
  AR : Argentina model
  AUS : Australian model
  E4 : African model
  E12 : 220 – 240 V AC area in E models
  EA : Saudi Arabia model
  LA9 : Latin-American model
  MY : Malaysia model
  RU : Russian model
  TH : Thai model

The components identified by mark ⚠ or dotted line with mark ⚠ are critical for safety.
Replace only with part number specified.

When indicating parts by reference number, please include the board name.

	Ref. No.	Part No.	Description			Remark
		A-2061-403-A	4CH DAMP BOARD, COMPLETE (SHAKEX7)			
		A-2061-407-A	4CH DAMP BOARD, COMPLETE (SHAKEX1/SHAKEX3)			
			**********			
			< CAPACITOR >			
	C1001	1-116-782-91	CERAMIC CHIP	2.2uF	10%	100V
	C1002	1-100-761-21	CERAMIC CHIP	0.01uF	10%	250V
	C1005	1-116-782-91	CERAMIC CHIP	2.2uF	10%	100V
*	C1006	1-100-925-21	CERAMIC CHIP	0.0022uF	10%	250V
	C1007	1-100-761-21	CERAMIC CHIP	0.01uF	10%	250V
	C1009	1-118-978-11	CERAMIC CHIP	0.47uF	10%	250V
*	C1012	1-100-925-21	CERAMIC CHIP	0.0022uF	10%	250V
	C1013	1-118-040-11	CERAMIC CHIP	2.2uF	10%	16V
	C1014	1-118-977-11	CERAMIC CHIP	0.22uF	10%	100V
	C1015	1-118-977-11	CERAMIC CHIP	0.22uF	10%	100V
	C1016	1-100-761-21	CERAMIC CHIP	0.01uF	10%	250V
	C1017	1-118-041-11	CERAMIC CHIP	4.7uF	10%	10V
	C1018	1-118-373-11	CERAMIC CHIP	0.01uF	10%	50V
	C1019	1-118-373-11	CERAMIC CHIP	0.01uF	10%	50V
	C1020	1-116-173-91	CERAMIC CHIP	0.0022uF	5%	50V
	C1021	1-114-339-91	CERAMIC CHIP	3300PF	5%	50V
	C1022	1-114-339-91	CERAMIC CHIP	3300PF	5%	50V
	C1027	1-124-779-00	ELECT CHIP	10uF	20%	16V
	C1028	1-124-779-00	ELECT CHIP	10uF	20%	16V
	C1030	1-116-173-91	CERAMIC CHIP	0.0022uF	5%	50V
	C1031	1-114-339-91	CERAMIC CHIP	3300PF	5%	50V
	C1032	1-114-339-91	CERAMIC CHIP	3300PF	5%	50V
	C1033	1-118-041-11	CERAMIC CHIP	4.7uF	10%	10V
	C1034	1-114-236-21	CERAMIC CHIP	22uF	10%	25V
	C1035	1-116-782-91	CERAMIC CHIP	2.2uF	10%	100V
	C1036	1-100-761-21	CERAMIC CHIP	0.01uF	10%	250V
	C1039	1-116-782-91	CERAMIC CHIP	2.2uF	10%	100V
*	C1040	1-100-925-21	CERAMIC CHIP	0.0022uF	10%	250V
	C1041	1-100-761-21	CERAMIC CHIP	0.01uF	10%	250V
	C1043	1-118-978-11	CERAMIC CHIP	0.47uF	10%	250V
*	C1046	1-100-925-21	CERAMIC CHIP	0.0022uF	10%	250V
	C1047	1-118-977-11	CERAMIC CHIP	0.22uF	10%	100V
	C1048	1-118-977-11	CERAMIC CHIP	0.22uF	10%	100V
	C1049	1-100-761-21	CERAMIC CHIP	0.01uF	10%	250V
	C1050	1-114-236-21	CERAMIC CHIP	22uF	10%	25V
	C1060	1-116-782-91	CERAMIC CHIP	2.2uF	10%	100V (SHAKEX7)
	C1061	1-100-761-21	CERAMIC CHIP	0.01uF	10%	250V (SHAKEX7)
	C1064	1-116-782-91	CERAMIC CHIP	2.2uF	10%	100V (SHAKEX7)
*	C1065	1-100-925-21	CERAMIC CHIP	0.0022uF	10%	250V (SHAKEX7)
	C1066	1-100-761-21	CERAMIC CHIP	0.01uF	10%	250V (SHAKEX7)
	C1068	1-118-978-11	CERAMIC CHIP	0.47uF	10%	250V (SHAKEX7)
*	C1071	1-100-925-21	CERAMIC CHIP	0.0022uF	10%	250V (SHAKEX7)
	C1072	1-118-040-11	CERAMIC CHIP	2.2uF	10%	16V (SHAKEX7)
	C1073	1-118-977-11	CERAMIC CHIP	0.22uF	10%	100V (SHAKEX7)
	C1074	1-118-977-11	CERAMIC CHIP	0.22uF	10%	100V (SHAKEX7)
	C1075	1-100-761-21	CERAMIC CHIP	0.01uF	10%	250V (SHAKEX7)
	C1076	1-118-041-11	CERAMIC CHIP	4.7uF	10%	10V (SHAKEX7)
	C1077	1-118-373-11	CERAMIC CHIP	0.01uF	10%	50V (SHAKEX7)
	C1078	1-118-373-11	CERAMIC CHIP	0.01uF	10%	50V (SHAKEX7)
	C1079	1-116-173-91	CERAMIC CHIP	0.0022uF	5%	50V (SHAKEX7)
	C1080	1-114-339-91	CERAMIC CHIP	3300PF	5%	50V (SHAKEX7)
	C1081	1-114-339-91	CERAMIC CHIP	3300PF	5%	50V (SHAKEX7)
	C1086	1-124-779-00	ELECT CHIP	10uF	20%	16V (SHAKEX7)
	C1087	1-124-779-00	ELECT CHIP	10uF	20%	16V (SHAKEX7)
	C1089	1-116-173-91	CERAMIC CHIP	0.0022uF	5%	50V (SHAKEX7)
	C1090	1-114-339-91	CERAMIC CHIP	3300PF	5%	50V (SHAKEX7)
	C1091	1-114-339-91	CERAMIC CHIP	3300PF	5%	50V (SHAKEX7)
	C1092	1-118-041-11	CERAMIC CHIP	4.7uF	10%	10V (SHAKEX7)
	C1093	1-114-236-21	CERAMIC CHIP	22uF	10%	25V (SHAKEX7)
	C1094	1-116-782-91	CERAMIC CHIP	2.2uF	10%	100V (SHAKEX7)

4CH DAMP

	Ref. No.	Part No.	Description			Remark
	C1095	1-100-761-21	CERAMIC CHIP	0.01uF	10%	250V (SHAKEX7)
	C1098	1-116-782-91	CERAMIC CHIP	2.2uF	10%	100V (SHAKEX7)
*	C1099	1-100-925-21	CERAMIC CHIP	0.0022uF	10%	250V (SHAKEX7)
	C1100	1-100-761-21	CERAMIC CHIP	0.01uF	10%	250V (SHAKEX7)
	C1102	1-118-978-11	CERAMIC CHIP	0.47uF	10%	250V (SHAKEX7)
*	C1105	1-100-925-21	CERAMIC CHIP	0.0022uF	10%	250V (SHAKEX7)
	C1106	1-118-977-11	CERAMIC CHIP	0.22uF	10%	100V (SHAKEX7)
	C1107	1-118-977-11	CERAMIC CHIP	0.22uF	10%	100V (SHAKEX7)
	C1108	1-100-761-21	CERAMIC CHIP	0.01uF	10%	250V (SHAKEX7)
	C1109	1-114-236-21	CERAMIC CHIP	22uF	10%	25V (SHAKEX7)
	C1114	1-100-245-21	CERAMIC CHIP	0.001uF	10%	250V
	C1115	1-100-761-21	CERAMIC CHIP	0.01uF	10%	250V
	C1116	1-100-245-21	CERAMIC CHIP	0.001uF	10%	250V (SHAKEX7)
	C1118	1-100-761-21	CERAMIC CHIP	0.01uF	10%	250V (SHAKEX7)
	C1119	1-100-245-21	CERAMIC CHIP	0.001uF	10%	250V (SHAKEX7)
	C1120	1-164-245-11	CERAMIC CHIP	0.015uF	10%	25V (SHAKEX7)
	C1121	1-118-290-11	CERAMIC CHIP	0.001uF	10%	50V (SHAKEX7)
	C1122	1-118-290-11	CERAMIC CHIP	0.001uF	10%	50V
	C1123	1-164-245-11	CERAMIC CHIP	0.015uF	10%	25V
	C1125	1-118-290-11	CERAMIC CHIP	0.001uF	10%	50V
	C1126	1-100-761-21	CERAMIC CHIP	0.01uF	10%	250V
	C1127	1-100-245-21	CERAMIC CHIP	0.001uF	10%	250V
	C1128	1-164-245-11	CERAMIC CHIP	0.015uF	10%	25V (SHAKEX7)
	C1129	1-118-290-11	CERAMIC CHIP	0.001uF	10%	50V (SHAKEX7)
	C1134	1-118-041-11	CERAMIC CHIP	4.7uF	10%	10V
	C1135	1-118-041-11	CERAMIC CHIP	4.7uF	10%	10V
	C1137	1-116-739-11	CERAMIC CHIP	0.47uF	10%	50V
	C1138	1-118-289-11	CERAMIC CHIP	0.1uF	10%	16V
	C1139	1-128-992-21	ELECT CHIP	47uF	20%	25V
	C1142	1-162-927-11	CERAMIC CHIP	100PF	5%	50V
	C1143	1-162-927-11	CERAMIC CHIP	100PF	5%	50V
	C1144	1-118-041-11	CERAMIC CHIP	4.7uF	10%	10V (SHAKEX7)
	C1145	1-118-041-11	CERAMIC CHIP	4.7uF	10%	10V
	C1146	1-126-206-11	ELECT CHIP	100uF	20%	6.3V
	C1147	1-116-716-11	CERAMIC CHIP	10uF	10%	16V
	C1148	1-116-716-11	CERAMIC CHIP	10uF	10%	16V
	C1149	1-118-347-11	CERAMIC CHIP	0.1uF	10%	25V
	C1150	1-118-347-11	CERAMIC CHIP	0.1uF	10%	25V
	C1151	1-118-347-11	CERAMIC CHIP	0.1uF	10%	25V (SHAKEX7)
	C1152	1-118-347-11	CERAMIC CHIP	0.1uF	10%	25V (SHAKEX7)
	C1154	1-118-347-11	CERAMIC CHIP	0.1uF	10%	25V
	C1155	1-116-739-11	CERAMIC CHIP	0.47uF	10%	50V
	C1156	1-116-739-11	CERAMIC CHIP	0.47uF	10%	50V
	C1157	1-118-347-11	CERAMIC CHIP	0.1uF	10%	25V
	C1158	1-118-347-11	CERAMIC CHIP	0.1uF	10%	25V
	C1161	1-118-039-11	CERAMIC CHIP	1uF	10%	25V (SHAKEX7)
	C1162	1-118-039-11	CERAMIC CHIP	1uF	10%	25V (SHAKEX7)
	C1163	1-118-039-11	CERAMIC CHIP	1uF	10%	25V
	C1164	1-118-039-11	CERAMIC CHIP	1uF	10%	25V
	C1165	1-124-779-00	ELECT CHIP	10uF	20%	16V
	C1166	1-124-779-00	ELECT CHIP	10uF	20%	16V
	C1185	1-118-291-11	CERAMIC CHIP	100PF	5%	50V (SHAKEX7)
	C1186	1-118-291-11	CERAMIC CHIP	100PF	5%	50V
	C1187	1-164-676-11	CERAMIC CHIP	2200PF	5%	16V
	C1188	1-137-765-21	ELECT CHIP	47uF	20%	16V
	C1189	1-164-245-11	CERAMIC CHIP	0.015uF	10%	25V
	C1194	1-100-761-21	CERAMIC CHIP	0.01uF	10%	250V (SHAKEX7)
	C1199	1-118-290-11	CERAMIC CHIP	0.001uF	10%	50V (SHAKEX7)
	C1200	1-118-290-11	CERAMIC CHIP	0.001uF	10%	50V (SHAKEX7)
	C1201	1-118-290-11	CERAMIC CHIP	0.001uF	10%	50V
	C1202	1-118-290-11	CERAMIC CHIP	0.001uF	10%	50V
	C1203	1-118-290-11	CERAMIC CHIP	0.001uF	10%	50V
	C1204	1-118-290-11	CERAMIC CHIP	0.001uF	10%	50V (SHAKEX7)
	C1205	1-118-695-91	CERAMIC CHIP	0.01uF	5%	50V (SHAKEX7)
	C1206	1-118-695-91	CERAMIC CHIP	0.01uF	5%	50V
	C1210	1-118-626-11	ELECT	4700uF	20%	71V (SHAKEX7)
	C1211	1-118-626-11	ELECT	4700uF	20%	71V (SHAKEX7)
	C1212	1-118-626-11	ELECT	4700uF	20%	71V (SHAKEX7)
	C1213	1-118-626-11	ELECT	4700uF	20%	71V (SHAKEX7)
	C1220	1-137-765-21	ELECT CHIP	47uF	20%	16V
	C1221	1-164-676-11	CERAMIC CHIP	2200PF	5%	16V
	C1226	1-114-339-91	CERAMIC CHIP	3300PF	5%	50V (SHAKEX7)
	C1227	1-114-339-91	CERAMIC CHIP	3300PF	5%	50V (SHAKEX7)
	C1228	1-114-236-21	CERAMIC CHIP	22uF	10%	25V
	C1229	1-114-236-21	CERAMIC CHIP	22uF	10%	25V
	C1230	1-114-236-21	CERAMIC CHIP	22uF	10%	25V (SHAKEX7)
	C1231	1-114-236-21	CERAMIC CHIP	22uF	10%	25V (SHAKEX7)
	C1236	1-100-761-21	CERAMIC CHIP	0.01uF	10%	250V (SHAKEX7)
	C1237	1-100-761-21	CERAMIC CHIP	0.01uF	10%	250V (SHAKEX1/SHAKEX3)
	C1238	1-118-626-11	ELECT	4700uF	20%	71V (SHAKEX1/SHAKEX3)
	C1239	1-118-626-11	ELECT	4700uF	20%	71V (SHAKEX1/SHAKEX3)
*	C1240	1-116-735-11	CERAMIC CHIP	1uF	10%	16V
*	C1241	1-116-735-11	CERAMIC CHIP	1uF	10%	16V (SHAKEX7)
			< CONNECTOR >			
	CN1001	1-843-957-11	PIN, CONNECTOR (3.96MM) 10P			

Ref. No.	Part No.	Description	Remark
CN1003	1-843-885-11	PIN, CONNECTOR (PC BOARD) 2P	
CN1009	1-820-119-51	CONNECTOR, FFC/FPC 21P	
CN1011	1-843-885-11	PIN, CONNECTOR (PC BOARD) 2P (SHAKEX7)	
		< DIODE >	
D1000	6-503-987-01	DI RF05VAM2STR	
D1001	6-503-987-01	DI RF05VAM2STR	
D1002	6-503-999-01	DI RF201L2SFJTE25	
D1003	6-503-999-01	DI RF201L2SFJTE25	
D1004	6-503-987-01	DI RF05VAM2STR	
D1005	6-503-999-01	DI RF201L2SFJTE25	
D1006	6-503-999-01	DI RF201L2SFJTE25	
D1007	6-503-987-01	DI RF05VAM2STR	
D1008	6-503-987-01	DI RF05VAM2STR	
D1009	6-503-987-01	DI RF05VAM2STR	
D1010	6-503-987-01	DI RF05VAM2STR (SHAKEX7)	
D1011	6-503-987-01	DI RF05VAM2STR (SHAKEX7)	
D1012	6-503-999-01	DI RF201L2SFJTE25 (SHAKEX7)	
D1013	6-503-999-01	DI RF201L2SFJTE25 (SHAKEX7)	
D1014	6-503-987-01	DI RF05VAM2STR (SHAKEX7)	
D1015	6-503-999-01	DI RF201L2SFJTE25 (SHAKEX7)	
D1016	6-503-999-01	DI RF201L2SFJTE25 (SHAKEX7)	
D1017	6-503-987-01	DI RF05VAM2STR (SHAKEX7)	
D1018	6-503-987-01	DI RF05VAM2STR (SHAKEX7)	
D1019	6-503-987-01	DI RF05VAM2STR (SHAKEX7)	
D1020	6-502-970-01	DI DZ2J068M0L	
D1021	6-503-026-01	DI DZ2J120M0L	
D1022	6-502-970-01	DI DZ2J068M0L	
D1023	6-503-857-01	DI BAW56	
D1024	6-500-514-01	DIODE BAV70	
* D1025	6-503-578-01	DI RB520SM-30T2R	
* D1027	6-503-578-01	DI RB520SM-30T2R (SHAKEX7)	
D1030	6-500-514-01	DIODE BAV70	
D1032	6-504-003-01	DI RB578VAM100TR	
D1033	6-504-003-01	DI RB578VAM100TR (SHAKEX7)	
		< IC >	
IC1005	6-722-001-01	IC 78D12AG-TN3-R	
IC1006	6-722-002-01	IC 78D07AG-TN3-R	
IC1007	6-722-003-01	IC 79D07AG-TN3-R	
IC1008	(Not supplied)	IC CXD90038ER	
IC1009	6-721-937-01	IC BD34700FV-E2	
IC1010	(Not supplied)	IC CXD90038ER (SHAKEX7)	
		< COIL >	
L1001	1-482-160-21	INDUCTOR 20uH	
L1003	1-482-160-21	INDUCTOR 20uH	
L1006	1-482-160-21	INDUCTOR 20uH (SHAKEX7)	
L1008	1-482-160-21	INDUCTOR 20uH (SHAKEX7)	
		< TRANSISTOR >	
Q1000	6-552-698-01	TR IRF6775MTR1PBF	
Q1001	6-552-698-01	TR IRF6775MTR1PBF	
Q1002	8-729-013-28	TR HN1B01FU	
Q1003	8-729-427-72	TRANSISTOR XP4501	
Q1004	6-552-698-01	TR IRF6775MTR1PBF	
Q1005	6-552-698-01	TR IRF6775MTR1PBF	
Q1006	6-552-698-01	TR IRF6775MTR1PBF (SHAKEX7)	
Q1007	6-552-698-01	TR IRF6775MTR1PBF (SHAKEX7)	
Q1008	8-729-013-28	TR HN1B01FU (SHAKEX7)	
Q1009	8-729-427-72	TRANSISTOR XP4501 (SHAKEX7)	

Note: IC1008 and IC1010 on the 4CH DAMP board cannot exchange with single. When these parts on the 4CH DAMP board are damaged, exchange the entire mounted board.

Ref. No.	Part No.	Description	Remark
Q1010	6-552-698-01	TR IRF6775MTR1PBF (SHAKEX7)	
Q1011	6-552-698-01	TR IRF6775MTR1PBF (SHAKEX7)	
Q1012	8-729-026-53	TRANSISTOR 2SA1576A-T106-QR	
Q1013	8-729-905-35	TRANSISTOR 2SC4081-R	
Q1014	6-552-922-01	TR LTA014EUBFS8TL	
Q1015	8-729-924-99	TRANSISTOR 2SC3722K-E	
Q1016	6-550-978-01	TR RN1902	
Q1018	6-550-978-01	TR RN1902	
Q1019	8-729-013-28	TR HN1B01FU	
Q1020	6-552-746-01	TR DSA700300L	
Q1021	8-729-427-72	TRANSISTOR XP4501	
Q1022	6-552-746-01	TR DSA700300L (SHAKEX7)	
Q1023	6-552-892-01	TR LSCR523UBFS8TL	
Q1024	6-552-892-01	TR LSCR523UBFS8TL (SHAKEX7)	
Q1025	8-729-905-35	TRANSISTOR 2SC4081-R	
		< RESISTOR >	
R1000	1-216-843-11	METAL CHIP 68K 5% 1/10W	
R1001	1-216-843-11	METAL CHIP 68K 5% 1/10W	
R1003	1-218-867-11	METAL CHIP 6.8K 0.5% 1/10W	
R1004	1-216-793-11	METAL CHIP 4.7 5% 1/10W	
R1005	1-218-855-11	METAL CHIP 2.2K 0.5% 1/10W	
R1006	1-216-797-11	METAL CHIP 10 5% 1/10W	
R1007	1-216-849-11	METAL CHIP 220K 5% 1/10W	
R1008	1-216-797-11	METAL CHIP 10 5% 1/10W	
R1009	1-216-797-11	METAL CHIP 10 5% 1/10W	
R1010	1-216-797-11	METAL CHIP 10 5% 1/10W	
R1011	1-218-869-11	METAL CHIP 8.2K 0.5% 1/10W	
R1013	1-216-791-11	METAL CHIP 3.3 5% 1/10W	
R1014	1-257-604-11	RES-CHIP 47 5% 2W	
R1017	1-257-604-11	RES-CHIP 47 5% 2W	
R1020	1-218-859-11	METAL CHIP 3.3K 0.5% 1/10W	
R1021	1-216-837-11	METAL CHIP 22K 5% 1/10W	
R1022	1-216-846-11	METAL CHIP 120K 5% 1/10W	
R1023	1-216-246-00	METAL CHIP 100K 5% 1/8W	
R1024	1-216-840-11	METAL CHIP 39K 5% 1/10W	
R1025	1-218-827-11	METAL CHIP 150 0.5% 1/10W	
R1026	1-218-827-11	METAL CHIP 150 0.5% 1/10W	
R1027	1-216-847-11	METAL CHIP 150K 5% 1/10W	
R1028	1-216-864-11	SHORT CHIP 0	
R1029	1-218-867-11	METAL CHIP 6.8K 0.5% 1/10W	
R1030	1-216-793-11	METAL CHIP 4.7 5% 1/10W	
R1031	1-216-793-11	METAL CHIP 4.7 5% 1/10W	
R1033	1-216-246-00	METAL CHIP 100K 5% 1/8W	
R1036	1-218-867-11	METAL CHIP 6.8K 0.5% 1/10W	
R1037	1-216-821-11	METAL CHIP 1K 5% 1/10W	
R1038	1-216-833-11	METAL CHIP 10K 5% 1/10W	
R1039	1-218-867-11	METAL CHIP 6.8K 0.5% 1/10W	
R1040	1-218-855-11	METAL CHIP 2.2K 0.5% 1/10W	
R1041	1-216-864-11	SHORT CHIP 0	
R1042	1-216-833-11	METAL CHIP 10K 5% 1/10W	
R1043	1-216-797-11	METAL CHIP 10 5% 1/10W	
R1044	1-216-797-11	METAL CHIP 10 5% 1/10W	
R1045	1-216-797-11	METAL CHIP 10 5% 1/10W	
R1047	1-216-791-11	METAL CHIP 3.3 5% 1/10W	
R1048	1-257-604-11	RES-CHIP 47 5% 2W	
R1051	1-257-604-11	RES-CHIP 47 5% 2W	
R1054	1-218-855-11	METAL CHIP 2.2K 0.5% 1/10W	
R1055	1-216-864-11	SHORT CHIP 0	
R1056	1-216-833-11	METAL CHIP 10K 5% 1/10W	
R1057	1-218-867-11	METAL CHIP 6.8K 0.5% 1/10W	

4CH DAMP

Ref. No.	Part No.	Description			Remark
R1058	1-218-867-11	METAL CHIP	6.8K	0.5%	1/10W
R1059	1-218-855-11	METAL CHIP	2.2K	0.5%	1/10W
R1060	1-216-864-11	SHORT CHIP	0		
R1061	1-216-833-11	METAL CHIP	10K	5%	1/10W
R1062	1-216-793-11	METAL CHIP	4.7	5%	1/10W
R1063	1-216-843-11	METAL CHIP	68K	5%	1/10W
R1064	1-216-843-11	METAL CHIP	68K	5%	1/10W
R1065	1-216-844-11	METAL CHIP	82K	5%	1/10W
R1066	1-216-843-11	METAL CHIP	68K	5%	1/10W
R1067	1-216-843-11	METAL CHIP	68K	5%	1/10W
R1068	1-216-844-11	METAL CHIP	82K	5%	1/10W
R1076	1-216-843-11	METAL CHIP	68K	5%	1/10W (SHAKEX7)
R1077	1-216-843-11	METAL CHIP	68K	5%	1/10W (SHAKEX7)
R1079	1-218-867-11	METAL CHIP	6.8K	0.5%	1/10W (SHAKEX7)
R1080	1-216-793-11	METAL CHIP	4.7	5%	1/10W (SHAKEX7)
R1081	1-218-855-11	METAL CHIP	2.2K	0.5%	1/10W (SHAKEX7)
R1082	1-216-797-11	METAL CHIP	10	5%	1/10W (SHAKEX7)
R1083	1-216-849-11	METAL CHIP	220K	5%	1/10W (SHAKEX7)
R1084	1-216-797-11	METAL CHIP	10	5%	1/10W (SHAKEX7)
R1085	1-216-797-11	METAL CHIP	10	5%	1/10W (SHAKEX7)
R1086	1-216-797-11	METAL CHIP	10	5%	1/10W (SHAKEX7)
R1087	1-218-869-11	METAL CHIP	8.2K	0.5%	1/10W (SHAKEX7)
R1089	1-216-791-11	METAL CHIP	3.3	5%	1/10W (SHAKEX7)
R1090	1-257-604-11	RES-CHIP	47	5%	2W (SHAKEX7)
R1093	1-257-604-11	RES-CHIP	47	5%	2W (SHAKEX7)
R1096	1-218-859-11	METAL CHIP	3.3K	0.5%	1/10W (SHAKEX7)
R1097	1-216-837-11	METAL CHIP	22K	5%	1/10W (SHAKEX7)
R1098	1-216-846-11	METAL CHIP	120K	5%	1/10W (SHAKEX7)
R1099	1-216-246-00	METAL CHIP	100K	5%	1/8W (SHAKEX7)
R1100	1-216-840-11	METAL CHIP	39K	5%	1/10W (SHAKEX7)
R1101	1-218-827-11	METAL CHIP	150	0.5%	1/10W (SHAKEX7)
R1102	1-218-827-11	METAL CHIP	150	0.5%	1/10W (SHAKEX7)
R1103	1-216-847-11	METAL CHIP	150K	5%	1/10W (SHAKEX7)
R1104	1-216-864-11	SHORT CHIP	0 (SHAKEX7)		
R1105	1-218-867-11	METAL CHIP	6.8K	0.5%	1/10W (SHAKEX7)
R1106	1-216-793-11	METAL CHIP	4.7	5%	1/10W (SHAKEX7)
R1107	1-216-793-11	METAL CHIP	4.7	5%	1/10W (SHAKEX7)
R1109	1-216-246-00	METAL CHIP	100K	5%	1/8W (SHAKEX7)
R1112	1-218-867-11	METAL CHIP	6.8K	0.5%	1/10W (SHAKEX7)
R1113	1-216-821-11	METAL CHIP	1K	5%	1/10W (SHAKEX7)
R1114	1-216-833-11	METAL CHIP	10K	5%	1/10W (SHAKEX7)
R1115	1-218-867-11	METAL CHIP	6.8K	0.5%	1/10W (SHAKEX7)
R1116	1-218-855-11	METAL CHIP	2.2K	0.5%	1/10W (SHAKEX7)
R1117	1-216-864-11	SHORT CHIP	0 (SHAKEX7)		
R1118	1-216-833-11	METAL CHIP	10K	5%	1/10W (SHAKEX7)
R1119	1-216-797-11	METAL CHIP	10	5%	1/10W (SHAKEX7)
R1120	1-216-797-11	METAL CHIP	10	5%	1/10W (SHAKEX7)
R1121	1-216-797-11	METAL CHIP	10	5%	1/10W (SHAKEX7)
R1123	1-216-791-11	METAL CHIP	3.3	5%	1/10W (SHAKEX7)
R1124	1-257-604-11	RES-CHIP	47	5%	2W (SHAKEX7)
R1127	1-257-604-11	RES-CHIP	47	5%	2W (SHAKEX7)
R1130	1-218-855-11	METAL CHIP	2.2K	0.5%	1/10W (SHAKEX7)
R1131	1-216-864-11	SHORT CHIP	0 (SHAKEX7)		
R1132	1-216-833-11	METAL CHIP	10K	5%	1/10W (SHAKEX7)
R1133	1-218-867-11	METAL CHIP	6.8K	0.5%	1/10W (SHAKEX7)
R1134	1-218-867-11	METAL CHIP	6.8K	0.5%	1/10W (SHAKEX7)
R1135	1-218-855-11	METAL CHIP	2.2K	0.5%	1/10W (SHAKEX7)
R1136	1-216-864-11	SHORT CHIP	0 (SHAKEX7)		
R1137	1-216-833-11	METAL CHIP	10K	5%	1/10W (SHAKEX7)
R1138	1-216-793-11	METAL CHIP	4.7	5%	1/10W (SHAKEX7)
R1139	1-216-843-11	METAL CHIP	68K	5%	1/10W (SHAKEX7)
R1140	1-216-843-11	METAL CHIP	68K	5%	1/10W (SHAKEX7)
R1141	1-216-844-11	METAL CHIP	82K	5%	1/10W (SHAKEX7)
R1142	1-216-843-11	METAL CHIP	68K	5%	1/10W (SHAKEX7)
R1143	1-216-843-11	METAL CHIP	68K	5%	1/10W (SHAKEX7)
R1144	1-216-844-11	METAL CHIP	82K	5%	1/10W (SHAKEX7)
R1147	1-257-362-21	METAL CHIP	1	5%	1/2W
R1148	1-216-828-11	METAL CHIP	3.9K	5%	1/10W
R1149	1-257-362-21	METAL CHIP	1	5%	1/2W
R1150	1-216-828-11	METAL CHIP	3.9K	5%	1/10W
R1151	1-216-833-11	METAL CHIP	10K	5%	1/10W
R1152	1-216-833-11	METAL CHIP	10K	5%	1/10W
R1153	1-216-846-11	METAL CHIP	120K	5%	1/10W
R1156	1-216-809-11	METAL CHIP	100	5%	1/10W
R1157	1-216-809-11	METAL CHIP	100	5%	1/10W
R1158	1-216-864-11	SHORT CHIP	0		
R1164	1-216-850-11	METAL CHIP	270K	5%	1/10W

Ref. No.	Part No.	Description			Remark
R1165	1-218-977-11	METAL CHIP	100K	5%	1/16W
R1166	1-216-837-11	METAL CHIP	22K	5%	1/10W
R1167	1-216-837-11	METAL CHIP	22K	5%	1/10W (SHAKEX7)
R1168	1-218-973-11	METAL CHIP	47K	5%	1/16W
R1169	1-216-835-11	METAL CHIP	15K	5%	1/10W
R1170	1-216-791-11	METAL CHIP	3.3	5%	1/10W (SHAKEX7)
R1171	1-218-446-11	METAL CHIP	1	5%	1/10W (SHAKEX7)
R1172	1-216-791-11	METAL CHIP	3.3	5%	1/10W (SHAKEX7)
R1173	1-218-446-11	METAL CHIP	1	5%	1/10W (SHAKEX7)
R1174	1-218-446-11	METAL CHIP	1	5%	1/10W
R1175	1-216-791-11	METAL CHIP	3.3	5%	1/10W
R1176	1-216-791-11	METAL CHIP	3.3	5%	1/10W
R1177	1-218-446-11	METAL CHIP	1	5%	1/10W
R1178	1-216-833-11	METAL CHIP	10K	5%	1/10W
R1179	1-216-827-11	METAL CHIP	3.3K	5%	1/10W
R1180	1-216-841-11	METAL CHIP	47K	5%	1/10W
R1181	1-216-839-11	METAL CHIP	33K	5%	1/10W (SHAKEX7)
R1181	1-216-847-11	METAL CHIP	150K	5%	1/10W (SHAKEX1/SHAKEX3)
R1182	1-216-823-11	METAL CHIP	1.5K	5%	1/10W
R1185	1-216-827-11	METAL CHIP	3.3K	5%	1/10W
R1186	1-216-827-11	METAL CHIP	3.3K	5%	1/10W
R1187	1-216-833-11	METAL CHIP	10K	5%	1/10W (SHAKEX7)
R1188	1-216-827-11	METAL CHIP	3.3K	5%	1/10W (SHAKEX7)
R1189	1-216-827-11	METAL CHIP	3.3K	5%	1/10W (SHAKEX7)
R1190	1-216-827-11	METAL CHIP	3.3K	5%	1/10W (SHAKEX7)
R1193	1-216-864-11	SHORT CHIP	0		
R1194	1-216-828-11	METAL CHIP	3.9K	5%	1/10W
R1195	1-216-828-11	METAL CHIP	3.9K	5%	1/10W (SHAKEX7)
R1197	1-216-836-11	METAL CHIP	18K	5%	1/10W
R1198	1-216-857-11	METAL CHIP	1M	5%	1/10W (SHAKEX7)
R1199	1-216-857-11	METAL CHIP	1M	5%	1/10W (SHAKEX7)
R1200	1-216-857-11	METAL CHIP	1M	5%	1/10W
R1201	1-216-857-11	METAL CHIP	1M	5%	1/10W
R1206	1-216-809-11	METAL CHIP	100	5%	1/10W (SHAKEX7)
R1207	1-216-809-11	METAL CHIP	100	5%	1/10W
R1213	1-216-864-11	SHORT CHIP	0		
R1215	1-216-864-11	SHORT CHIP	0 (SHAKEX7)		
R1221	1-216-829-11	METAL CHIP	4.7K	5%	1/10W
R1222	1-216-295-91	SHORT CHIP	0		
R1225	1-216-837-11	METAL CHIP	22K	5%	1/10W
R1242	1-216-864-11	SHORT CHIP	0 (SHAKEX7)		
R1244	1-216-864-11	SHORT CHIP	0 (SHAKEX1/SHAKEX3)		
R1246	1-218-827-11	METAL CHIP	150	0.5%	1/10W
R1247	1-218-827-11	METAL CHIP	150	0.5%	1/10W
R1248	1-216-845-11	METAL CHIP	100K	5%	1/10W (SHAKEX7)
R1248	1-216-864-11	SHORT CHIP	0 (SHAKEX1/SHAKEX3)		

Ref. No.	Part No.	Description			Remark
R1251	1-218-827-11	METAL CHIP	150	0.5%	1/10W (SHAKEX7)
R1252	1-218-827-11	METAL CHIP	150	0.5%	1/10W (SHAKEX7)
R1253	1-216-845-11	METAL CHIP	100K	5%	1/10W (SHAKEX7)
R1255	1-216-864-11	SHORT CHIP	0 (SHAKEX7)		
R1256	1-216-864-11	SHORT CHIP	0 (SHAKEX7)		
R1257	1-218-867-11	METAL CHIP	6.8K	0.5%	1/10W (SHAKEX7)
R1258	1-218-867-11	METAL CHIP	6.8K	0.5%	1/10W (SHAKEX7)
R1259	1-216-828-11	METAL CHIP	3.9K	5%	1/10W (SHAKEX1/SHAKEX3)
R1265	1-218-853-11	METAL CHIP	1.8K	0.5%	1/10W (SHAKEX7)
R1266	1-218-853-11	METAL CHIP	1.8K	0.5%	1/10W
R1267	1-216-864-11	SHORT CHIP	0		
		< TERMINAL >			
TB1000	1-854-077-11	SPEAKER TERMINAL JACK (RIGHT SPEAKER IMPEDANCE USE 8 Ω)			(SHAKEX7)
TB1002	1-854-001-21	TERMINAL BOARD (SPEAKER) (SPEAKERS R/L IMPEDANCE USE 4Ω)			(SHAKEX1/SHAKEX3)
TB1003	1-854-077-11	SPEAKER TERMINAL JACK (LEFT SPEAKER IMPEDANCE USE 8 Ω)			(SHAKEX7)
		< THERMISTOR >			
⚠ TH1001	1-812-124-11	THERMISTOR, POSITIVE (SHAKEX7)			
⚠ TH1002	1-812-124-11	THERMISTOR, POSITIVE			

****

	A-2061-685-A	DISPLAY BOARD, COMPLETE			
		**********			
		< CAPACITOR >			
C2066	1-116-734-11	CERAMIC CHIP	1uF	20%	16V
C2068	1-116-078-11	CERAMIC CHIP	1uF	10%	50V
C2069	1-116-078-11	CERAMIC CHIP	1uF	10%	50V
C2070	1-116-078-11	CERAMIC CHIP	1uF	10%	50V
C2073	1-116-734-11	CERAMIC CHIP	1uF	20%	16V
C2074	1-116-078-11	CERAMIC CHIP	1uF	10%	50V
C2075	1-118-347-11	CERAMIC CHIP	0.1uF	10%	25V
C2076	1-118-347-11	CERAMIC CHIP	0.1uF	10%	25V
C2077	1-162-927-11	CERAMIC CHIP	100PF	5%	50V
C2078	1-118-347-11	CERAMIC CHIP	0.1uF	10%	25V
C2104	1-118-361-11	CERAMIC CHIP	0.1uF	10%	50V
C2105	1-118-347-11	CERAMIC CHIP	0.1uF	10%	25V
C2108	1-114-814-11	CERAMIC CHIP	0.33uF	10%	25V
C2109	1-118-347-11	CERAMIC CHIP	0.1uF	10%	25V
C2111	1-126-791-11	ELECT	10uF	20%	35V
C2122	1-118-361-11	CERAMIC CHIP	0.1uF	10%	50V
C2125	1-162-927-11	CERAMIC CHIP	100PF	5%	50V
C2126	1-162-927-11	CERAMIC CHIP	100PF	5%	50V
C2127	1-126-964-11	ELECT	10uF	20%	50V
		< CONNECTOR >			
CN1006	1-779-544-21	CONNECTOR, FFC (LIF (NON-ZIF)) 7P			

Ref. No.	Part No.	Description			Remark
		< DIODE >			
D2008	6-500-400-01	DIODE BAV99-215			
D2009	6-500-400-01	DIODE BAV99-215			
D2010	6-503-042-01	DI DZ2J330M0L			
D2015	6-503-605-01	DI UDZVTE-172.0B			
		< IC >			
IC1003	6-722-126-01	IC LM7806L-T2Q-1			
		< JUMPER RESISTOR >			
JR2010	1-216-296-11	SHORT CHIP	0		
JR2011	1-216-296-11	SHORT CHIP	0		
JR2012	1-216-296-11	SHORT CHIP	0		
JR2014	1-216-296-11	SHORT CHIP	0		
		< FLUORESCENT INDICATOR TUBE >			
ND2001	1-483-519-11	VACUUM FLUORESCENT DISPLAY			
		< TRANSISTOR >			
Q2006	6-553-291-01	TR	BC817DPN		
		< RESISTOR >			
R2084	1-216-809-11	METAL CHIP	100	5%	1/10W
R2085	1-216-809-11	METAL CHIP	100	5%	1/10W
R2086	1-216-809-11	METAL CHIP	100	5%	1/10W
R2094	1-216-839-11	METAL CHIP	33K	5%	1/10W
R2095	1-216-797-11	METAL CHIP	10	5%	1/10W
R2096	1-216-797-11	METAL CHIP	10	5%	1/10W
R2097	1-216-843-11	METAL CHIP	68K	5%	1/10W
R2098	1-216-809-11	METAL CHIP	100	5%	1/10W
R2099	1-216-809-11	METAL CHIP	100	5%	1/10W
R2100	1-216-809-11	METAL CHIP	100	5%	1/10W
R2101	1-216-806-11	METAL CHIP	56	5%	1/10W
R2102	1-216-806-11	METAL CHIP	56	5%	1/10W
R2111	1-216-806-11	METAL CHIP	56	5%	1/10W
R2134	1-216-802-11	METAL CHIP	27	5%	1/10W
R2135	1-216-802-11	METAL CHIP	27	5%	1/10W
R2136	1-216-802-11	METAL CHIP	27	5%	1/10W
R2137	1-216-802-11	METAL CHIP	27	5%	1/10W
R2138	1-216-802-11	METAL CHIP	27	5%	1/10W
R2140	1-216-802-11	METAL CHIP	27	5%	1/10W
R2141	1-216-802-11	METAL CHIP	27	5%	1/10W
R2142	1-216-802-11	METAL CHIP	27	5%	1/10W
R2143	1-216-802-11	METAL CHIP	27	5%	1/10W
R2144	1-216-802-11	METAL CHIP	27	5%	1/10W
R2146	1-216-802-11	METAL CHIP	27	5%	1/10W
R2147	1-216-802-11	METAL CHIP	27	5%	1/10W
R2148	1-216-802-11	METAL CHIP	27	5%	1/10W
R2149	1-216-802-11	METAL CHIP	27	5%	1/10W
R2150	1-216-802-11	METAL CHIP	27	5%	1/10W

****

IR BOARD
****

Ref. No.	Part No.	Description			Remark
		< CAPACITOR >			
C001	1-127-715-11	CERAMIC CHIP	0.22uF	10%	16V
C1802	1-164-230-11	CERAMIC CHIP	220PF	5%	50V
		< IC >			
IC010	6-600-768-01	IC PNA4823M03S0			
		< RESISTOR >			
R001	1-216-801-11	METAL CHIP	22	5%	1/10W

****

LED BAR BOARD
****

Ref. No.	Part No.	Description			Remark
		< CONNECTOR >			
CN1004	1-779-548-21	CONNECTOR, FFC (LIF (NON-ZIF)) 11P			
		< DIODE >			
D001	6-504-214-01	DI HL-364W650MZ-T			
D002	6-504-214-01	DI HL-364W650MZ-T			
D003	6-504-214-01	DI HL-364W650MZ-T			
D004	6-504-214-01	DI HL-364W650MZ-T			
D005	6-504-214-01	DI HL-364W650MZ-T			
D006	6-504-214-01	DI HL-364W650MZ-T			
D007	6-504-214-01	DI HL-364W650MZ-T			

****

MIC BOARD
****

Ref. No.	Part No.	Description			Remark
		< CAPACITOR >			
C2202	1-115-867-11	ELECT	0.1uF	20%	50V
C2203	1-126-795-11	ELECT	10uF	20%	50V
C2204	1-118-347-11	CERAMIC CHIP	0.1uF	10%	25V
C2206	1-115-867-11	ELECT	0.1uF	20%	50V
C2207	1-124-463-00	ELECT	0.1uF	20%	50V
C2208	1-162-925-11	CERAMIC CHIP	68PF	5%	50V
C2209	1-162-963-11	CERAMIC CHIP	680PF	10%	50V
C2210	1-118-347-11	CERAMIC CHIP	0.1uF	10%	25V
C2211	1-126-176-11	ELECT	220uF	20%	10V
C2212	1-126-176-11	ELECT	220uF	20%	10V
C2213	1-118-347-11	CERAMIC CHIP	0.1uF	10%	25V
C2214	1-118-347-11	CERAMIC CHIP	0.1uF	10%	25V
C2219	1-162-960-11	CERAMIC CHIP	220PF	10%	50V
C2221	1-164-739-11	CERAMIC CHIP	560PF	5%	50V
C2233	1-118-290-11	CERAMIC CHIP	0.001uF	10%	50V
C2234	1-124-257-00	ELECT	2.2uF	20%	50V
C2235	1-124-257-00	ELECT	2.2uF	20%	50V
C2236	1-124-257-00	ELECT	2.2uF	20%	50V
C2238	1-118-290-11	CERAMIC CHIP	0.001uF	10%	50V
C2239	1-118-290-11	CERAMIC CHIP	0.001uF	10%	50V
C2240	1-118-290-11	CERAMIC CHIP	0.001uF	10%	50V
C2241	1-118-290-11	CERAMIC CHIP	0.001uF	10%	50V
C2242	1-115-872-11	ELECT	2.2uF	20%	50V
C2243	1-124-257-00	ELECT	2.2uF	20%	50V
C2244	1-162-960-11	CERAMIC CHIP	220PF	10%	50V
		< CONNECTOR >			
CN1101	1-564-719-11	PIN, CONNECTOR (SMALL TYPE) 3P			
		< DIODE >			
D2207	6-502-961-01	DI DA2J10100L			
D2216	6-500-400-01	DIODE BAV99-215			
D2217	6-500-400-01	DIODE BAV99-215			

Ref. No.	Part No.	Description			Remark
		< IC >			
IC2201	8-759-909-71	IC BA4558F			
		< JACK >			
J2201	1-822-967-12	JACK (MIC 2)			
J2202	1-822-967-12	JACK (MIC 1)			
		< JUMPER >			
JC013	1-216-295-91	SHORT CHIP	0		
		< JUMPER RESISTOR >			
JR2200	1-216-296-11	SHORT CHIP	0		
JR2201	1-216-296-11	SHORT CHIP	0		
JR2202	1-216-296-11	SHORT CHIP	0		
JR2203	1-216-296-11	SHORT CHIP	0		
JR2204	1-216-296-11	SHORT CHIP	0		
		< TRANSISTOR >			
Q2201	6-552-891-01	TR	LSAR523UBFS8TL		
Q2202	6-552-967-01	TR	RHK005N03T146		
		< RESISTOR >			
R2201	1-216-857-11	METAL CHIP	1M	5%	1/10W
R2202	1-216-857-11	METAL CHIP	1M	5%	1/10W
R2203	1-216-817-11	METAL CHIP	470	5%	1/10W
R2204	1-216-849-11	METAL CHIP	220K	5%	1/10W
R2205	1-216-845-11	METAL CHIP	100K	5%	1/10W
R2206	1-216-809-11	METAL CHIP	100	5%	1/10W
R2207	1-216-827-11	METAL CHIP	3.3K	5%	1/10W
R2208	1-216-833-11	METAL CHIP	10K	5%	1/10W
R2209	1-216-833-11	METAL CHIP	10K	5%	1/10W
R2210	1-216-845-11	METAL CHIP	100K	5%	1/10W
R2211	1-216-845-11	METAL CHIP	100K	5%	1/10W
R2212	1-216-833-11	METAL CHIP	10K	5%	1/10W
R2213	1-216-833-11	METAL CHIP	10K	5%	1/10W
R2214	1-216-839-11	METAL CHIP	33K	5%	1/10W
R2215	1-216-839-11	METAL CHIP	33K	5%	1/10W
R2216	1-216-821-11	METAL CHIP	1K	5%	1/10W
R2217	1-216-821-11	METAL CHIP	1K	5%	1/10W
R2218	1-216-821-11	METAL CHIP	1K	5%	1/10W
R2219	1-216-845-11	METAL CHIP	100K	5%	1/10W
R2220	1-216-845-11	METAL CHIP	100K	5%	1/10W
R2501	1-469-670-21	FERRITE, EMI (SMD) (2012)			
R2502	1-469-670-21	FERRITE, EMI (SMD) (2012)			

****

Ref. No.	Part No.	Description	Remark
	A-2074-163-A	MOTHERBOARD BOARD, COMPLETE (for SERVICE) (SHAKEX7: AR, LA9)	
	A-2074-164-A	MOTHERBOARD BOARD, COMPLETE (for SERVICE) (SHAKEX7: MY, TH)	
	A-2074-165-A	MOTHERBOARD BOARD, COMPLETE (for SERVICE) (SHAKEX7: E4, EA)	
	A-2074-166-A	MOTHERBOARD BOARD, COMPLETE (for SERVICE) (SHAKEX3: AR, LA9)	
	A-2074-168-A	MOTHERBOARD BOARD, COMPLETE (for SERVICE) (SHAKEX3: AEP, UK)	
	A-2074-169-A	MOTHERBOARD BOARD, COMPLETE (for SERVICE) (SHAKEX3: RU)	
	A-2074-170-A	MOTHERBOARD BOARD, COMPLETE (for SERVICE) (SHAKEX3: MY, TH)	
	A-2074-171-A	MOTHERBOARD BOARD, COMPLETE (for SERVICE) (SHAKEX3: E4, EA)	
	A-2077-950-A	MOTHERBOARD BOARD, COMPLETE (for SERVICE) (SHAKEX1: AEP, UK)	
	A-2077-951-A	MOTHERBOARD BOARD, COMPLETE (for SERVICE) (SHAKEX1: RU)	
	A-2077-952-A	MOTHERBOARD BOARD, COMPLETE (for SERVICE) (SHAKEX1: AUS)	
	A-2077-953-A	MOTHERBOARD BOARD, COMPLETE (for SERVICE) (SHAKEX1: MY, TH)	
	A-2077-954-A	MOTHERBOARD BOARD, COMPLETE (for SERVICE) (SHAKEX1: E4, EA)	
	A-2077-955-A	MOTHERBOARD BOARD, COMPLETE (for SERVICE) (SHAKEX7: E12)	
	A-2077-957-A	MOTHERBOARD BOARD, COMPLETE (for SERVICE) (SHAKEX1: AR, LA9)	
	A-2084-481-A	MOTHERBOARD BOARD, COMPLETE (for SERVICE) (SHAKEX3: AUS)	

****

< CAPACITOR >

	Ref. No.	Part No.	Description			
*	C003	1-116-714-11	CERAMIC CHIP	22uF	20%	6.3V
*	C004	1-116-714-11	CERAMIC CHIP	22uF	20%	6.3V
*	C005	1-116-714-11	CERAMIC CHIP	22uF	20%	6.3V
*	C006	1-116-714-11	CERAMIC CHIP	22uF	20%	6.3V
	C010	1-118-358-11	CERAMIC CHIP	100PF	1%	50V
	C011	1-118-347-11	CERAMIC CHIP	0.1uF	10%	25V
	C013	1-118-386-11	CERAMIC CHIP	0.1uF	10%	16V
	C014	1-118-386-11	CERAMIC CHIP	0.1uF	10%	16V
	C017	1-118-386-11	CERAMIC CHIP	0.1uF	10%	16V
	C018	1-118-386-11	CERAMIC CHIP	0.1uF	10%	16V
	C019	1-116-716-11	CERAMIC CHIP	10uF	10%	16V
	C021	1-116-716-11	CERAMIC CHIP	10uF	10%	16V
	C024	1-112-797-11	ELECT CHIP	470uF	20%	25V
	C030	1-116-716-11	CERAMIC CHIP	10uF	10%	16V
	C032	1-116-716-11	CERAMIC CHIP	10uF	10%	16V
	C034	1-118-386-11	CERAMIC CHIP	0.1uF	10%	16V
	C035	1-116-734-11	CERAMIC CHIP	1uF	20%	16V
	C036	1-116-734-11	CERAMIC CHIP	1uF	20%	16V
	C039	1-118-386-11	CERAMIC CHIP	0.1uF	10%	16V
	C040	1-118-386-11	CERAMIC CHIP	0.1uF	10%	16V
*	C049	1-116-714-11	CERAMIC CHIP	22uF	20%	6.3V
*	C050	1-116-714-11	CERAMIC CHIP	22uF	20%	6.3V
	C051	1-118-361-11	CERAMIC CHIP	0.1uF	10%	50V
*	C052	1-116-714-11	CERAMIC CHIP	22uF	20%	6.3V
*	C053	1-116-714-11	CERAMIC CHIP	22uF	20%	6.3V
	C057	1-117-681-11	ELECT CHIP	100uF	20%	16V
	C062	1-118-361-11	CERAMIC CHIP	0.1uF	10%	50V
	C064	1-118-347-11	CERAMIC CHIP	0.1uF	10%	25V
*	C065	1-118-035-11	CERAMIC CHIP	0.1uF	10%	25V
	C066	1-165-492-21	ELECT CHIP	100uF	20%	10V
	C067	1-165-492-21	ELECT CHIP	100uF	20%	10V
*	C068	1-118-035-11	CERAMIC CHIP	0.1uF	10%	25V
	C071	1-116-737-11	CERAMIC CHIP	1uF	20%	10V
	C072	1-165-492-21	ELECT CHIP	100uF	20%	10V
	C073	1-165-492-21	ELECT CHIP	100uF	20%	10V
	C074	1-118-386-11	CERAMIC CHIP	0.1uF	10%	16V
	C075	1-118-386-11	CERAMIC CHIP	0.1uF	10%	16V
	C076	1-118-373-11	CERAMIC CHIP	0.01uF	10%	50V
	C077	1-164-858-11	CERAMIC CHIP	22PF	5%	50V
	C078	1-164-858-11	CERAMIC CHIP	22PF	5%	50V

MOTHERBOARD

	Ref. No.	Part No.	Description			Remark
	C079	1-118-386-11	CERAMIC CHIP	0.1uF	10%	16V
	C080	1-164-858-11	CERAMIC CHIP	22PF	5%	50V
	C081	1-164-858-11	CERAMIC CHIP	22PF	5%	50V
	C083	1-118-347-11	CERAMIC CHIP	0.1uF	10%	25V
	C084	1-117-681-11	ELECT CHIP	100uF	20%	16V
	C085	1-118-361-11	CERAMIC CHIP	0.1uF	10%	50V
	C087	1-118-347-11	CERAMIC CHIP	0.1uF	10%	25V
	C088	1-114-188-11	ELECT CHIP	220uF	20%	16V
	C091	1-118-358-11	CERAMIC CHIP	100PF	1%	50V
	C092	1-118-347-11	CERAMIC CHIP	0.1uF	10%	25V
	C093	1-112-797-11	ELECT CHIP	470uF	20%	25V
*	C100	1-116-738-11	CERAMIC CHIP	1uF	10%	6.3V
*	C101	1-116-738-11	CERAMIC CHIP	1uF	10%	6.3V
*	C102	1-118-035-11	CERAMIC CHIP	0.1uF	10%	25V
	C103	1-126-603-11	ELECT CHIP	4.7uF	20%	35V
	C104	1-118-386-11	CERAMIC CHIP	0.1uF	10%	16V
	C105	1-162-966-91	CERAMIC CHIP	0.0022uF	10%	50V
*	C106	1-118-035-11	CERAMIC CHIP	0.1uF	10%	25V
*	C107	1-118-035-11	CERAMIC CHIP	0.1uF	10%	25V
	C109	1-116-737-11	CERAMIC CHIP	1uF	20%	10V
*	C110	1-118-035-11	CERAMIC CHIP	0.1uF	10%	25V
*	C111	1-118-035-11	CERAMIC CHIP	0.1uF	10%	25V
*	C112	1-118-035-11	CERAMIC CHIP	0.1uF	10%	25V
*	C113	1-118-035-11	CERAMIC CHIP	0.1uF	10%	25V
*	C114	1-118-035-11	CERAMIC CHIP	0.1uF	10%	25V
*	C115	1-118-035-11	CERAMIC CHIP	0.1uF	10%	25V
*	C116	1-118-035-11	CERAMIC CHIP	0.1uF	10%	25V
	C117	1-118-041-11	CERAMIC CHIP	4.7uF	10%	10V
*	C118	1-118-035-11	CERAMIC CHIP	0.1uF	10%	25V
*	C120	1-118-035-11	CERAMIC CHIP	0.1uF	10%	25V
	C121	1-118-391-11	CERAMIC CHIP	0.01uF	10%	50V
*	C122	1-118-035-11	CERAMIC CHIP	0.1uF	10%	25V
*	C123	1-118-035-11	CERAMIC CHIP	0.1uF	10%	25V
	C126	1-164-850-11	CERAMIC CHIP	10PF	0.5PF	50V
	C127	1-164-850-11	CERAMIC CHIP	10PF	0.5PF	50V
	C128	1-116-717-11	CERAMIC CHIP	10uF	20%	10V
*	C129	1-118-035-11	CERAMIC CHIP	0.1uF	10%	25V
	C130	1-164-850-11	CERAMIC CHIP	10PF	0.5PF	50V
*	C131	1-118-035-11	CERAMIC CHIP	0.1uF	10%	25V
	C132	1-164-850-11	CERAMIC CHIP	10PF	0.5PF	50V
*	C133	1-118-035-11	CERAMIC CHIP	0.1uF	10%	25V
*	C134	1-118-035-11	CERAMIC CHIP	0.1uF	10%	25V
*	C135	1-118-035-11	CERAMIC CHIP	0.1uF	10%	25V
*	C136	1-118-035-11	CERAMIC CHIP	0.1uF	10%	25V
*	C137	1-118-035-11	CERAMIC CHIP	0.1uF	10%	25V
*	C138	1-118-035-11	CERAMIC CHIP	0.1uF	10%	25V
	C139	1-164-866-11	CERAMIC CHIP	47PF	5%	50V
*	C140	1-118-035-11	CERAMIC CHIP	0.1uF	10%	25V
	C141	1-164-866-11	CERAMIC CHIP	47PF	5%	50V
	C142	1-164-866-11	CERAMIC CHIP	47PF	5%	50V
	C143	1-164-866-11	CERAMIC CHIP	47PF	5%	50V
*	C144	1-118-035-11	CERAMIC CHIP	0.1uF	10%	25V
*	C146	1-118-035-11	CERAMIC CHIP	0.1uF	10%	25V
*	C147	1-118-035-11	CERAMIC CHIP	0.1uF	10%	25V
*	C148	1-118-035-11	CERAMIC CHIP	0.1uF	10%	25V
	C149	1-165-492-21	ELECT CHIP	100uF	20%	10V
	C150	1-165-492-21	ELECT CHIP	100uF	20%	10V
	C151	1-164-846-11	CERAMIC CHIP	6PF	0.5PF	50V
	C152	1-164-847-11	CERAMIC CHIP	7PF	0.5PF	50V
*	C153	1-118-035-11	CERAMIC CHIP	0.1uF	10%	25V

	Ref. No.	Part No.	Description			Remark
*	C154	1-118-035-11	CERAMIC CHIP	0.1uF	10%	25V
*	C155	1-118-035-11	CERAMIC CHIP	0.1uF	10%	25V
*	C156	1-118-035-11	CERAMIC CHIP	0.1uF	10%	25V
*	C157	1-118-035-11	CERAMIC CHIP	0.1uF	10%	25V
*	C158	1-118-035-11	CERAMIC CHIP	0.1uF	10%	25V
*	C159	1-118-035-11	CERAMIC CHIP	0.1uF	10%	25V
*	C160	1-118-035-11	CERAMIC CHIP	0.1uF	10%	25V
	C161	1-118-459-11	CERAMIC CHIP	0.01uF	10%	25V
	C162	1-118-459-11	CERAMIC CHIP	0.01uF	10%	25V
*	C164	1-118-035-11	CERAMIC CHIP	0.1uF	10%	25V
*	C165	1-118-035-11	CERAMIC CHIP	0.1uF	10%	25V
*	C166	1-118-035-11	CERAMIC CHIP	0.1uF	10%	25V
*	C167	1-118-035-11	CERAMIC CHIP	0.1uF	10%	25V
*	C168	1-118-035-11	CERAMIC CHIP	0.1uF	10%	25V
	C277	1-164-938-11	CERAMIC CHIP	0.0015uF	10%	50V
	C278	1-164-858-11	CERAMIC CHIP	22PF	5%	50V
	C279	1-164-858-11	CERAMIC CHIP	22PF	5%	50V
*	C280	1-118-035-11	CERAMIC CHIP	0.1uF	10%	25V
*	C281	1-118-035-11	CERAMIC CHIP	0.1uF	10%	25V
*	C282	1-118-035-11	CERAMIC CHIP	0.1uF	10%	25V
	C284	1-118-386-11	CERAMIC CHIP	0.1uF	10%	16V
*	C297	1-118-035-11	CERAMIC CHIP	0.1uF	10%	25V
	C298	1-116-737-11	CERAMIC CHIP	1uF	20%	10V
	C299	1-164-874-11	CERAMIC CHIP	100PF	5%	50V
	C302	1-118-386-11	CERAMIC CHIP	0.1uF	10%	16V
	C303	1-118-386-11	CERAMIC CHIP	0.1uF	10%	16V
	C307	1-118-403-11	CERAMIC CHIP	0.001uF	10%	50V
	C308	1-118-403-11	CERAMIC CHIP	0.001uF	10%	50V
	C309	1-118-403-11	CERAMIC CHIP	0.001uF	10%	50V
	C310	1-118-403-11	CERAMIC CHIP	0.001uF	10%	50V
	C311	1-118-386-11	CERAMIC CHIP	0.1uF	10%	16V
*	C315	1-118-360-11	CERAMIC CHIP	0.1uF	10%	25V
	C316	1-116-717-11	CERAMIC CHIP	10uF	20%	10V
	C319	1-116-717-11	CERAMIC CHIP	10uF	20%	10V
	C321	1-116-717-11	CERAMIC CHIP	10uF	20%	10V
	C322	1-164-850-11	CERAMIC CHIP	10PF	0.5PF	50V
	C323	1-164-852-11	CERAMIC CHIP	12PF	5%	50V
	C324	1-118-386-11	CERAMIC CHIP	0.1uF	10%	16V
	C325	1-118-459-11	CERAMIC CHIP	0.01uF	10%	25V
	C326	1-118-459-11	CERAMIC CHIP	0.01uF	10%	25V
	C328	1-116-717-11	CERAMIC CHIP	10uF	20%	10V
	C330	1-118-386-11	CERAMIC CHIP	0.1uF	10%	16V
	C331	1-118-386-11	CERAMIC CHIP	0.1uF	10%	16V
	C334	1-118-459-11	CERAMIC CHIP	0.01uF	10%	25V
	C336	1-118-459-11	CERAMIC CHIP	0.01uF	10%	25V
	C337	1-116-737-11	CERAMIC CHIP	1uF	20%	10V
	C338	1-118-386-11	CERAMIC CHIP	0.1uF	10%	16V
	C339	1-118-459-11	CERAMIC CHIP	0.01uF	10%	25V
	C340	1-116-737-11	CERAMIC CHIP	1uF	20%	10V
	C341	1-116-717-11	CERAMIC CHIP	10uF	20%	10V
	C342	1-118-459-11	CERAMIC CHIP	0.01uF	10%	25V
	C343	1-116-737-11	CERAMIC CHIP	1uF	20%	10V
	C344	1-118-459-11	CERAMIC CHIP	0.01uF	10%	25V
	C345	1-118-386-11	CERAMIC CHIP	0.1uF	10%	16V
	C346	1-118-459-11	CERAMIC CHIP	0.01uF	10%	25V
	C347	1-118-459-11	CERAMIC CHIP	0.01uF	10%	25V
	C348	1-118-459-11	CERAMIC CHIP	0.01uF	10%	25V
	C349	1-118-459-11	CERAMIC CHIP	0.01uF	10%	25V
	C350	1-128-994-21	ELECT CHIP	47uF	20%	10V
	C352	1-118-386-11	CERAMIC CHIP	0.1uF	10%	16V

	Ref. No.	Part No.	Description			Remark
	C353	1-116-737-11	CERAMIC CHIP	1uF	20%	10V
	C354	1-118-386-11	CERAMIC CHIP	0.1uF	10%	16V
	C355	1-118-459-11	CERAMIC CHIP	0.01uF	10%	25V
	C356	1-116-737-11	CERAMIC CHIP	1uF	20%	10V
	C357	1-118-386-11	CERAMIC CHIP	0.1uF	10%	16V
	C358	1-118-386-11	CERAMIC CHIP	0.1uF	10%	16V
	C359	1-118-459-11	CERAMIC CHIP	0.01uF	10%	25V
	C360	1-118-386-11	CERAMIC CHIP	0.1uF	10%	16V
	C362	1-116-717-11	CERAMIC CHIP	10uF	20%	10V
	C363	1-118-386-11	CERAMIC CHIP	0.1uF	10%	16V
	C364	1-118-386-11	CERAMIC CHIP	0.1uF	10%	16V
	C365	1-118-386-11	CERAMIC CHIP	0.1uF	10%	16V
	C366	1-118-459-11	CERAMIC CHIP	0.01uF	10%	25V
	C367	1-118-459-11	CERAMIC CHIP	0.01uF	10%	25V
*	C369	1-118-360-11	CERAMIC CHIP	0.1uF	10%	25V
	C372	1-116-717-11	CERAMIC CHIP	10uF	20%	10V
	C373	1-112-692-11	CERAMIC CHIP	1000PF	5%	50V
	C401	1-165-492-21	ELECT CHIP	100uF	20%	10V
	C402	1-100-904-11	CERAMIC CHIP	330PF	10%	50V
	C403	1-114-807-11	CERAMIC CHIP	0.015uF	10%	25V
*	C404	1-118-035-11	CERAMIC CHIP	0.1uF	10%	25V
*	C405	1-118-035-11	CERAMIC CHIP	0.1uF	10%	25V
*	C406	1-118-035-11	CERAMIC CHIP	0.1uF	10%	25V
*	C407	1-118-035-11	CERAMIC CHIP	0.1uF	10%	25V
*	C408	1-118-035-11	CERAMIC CHIP	0.1uF	10%	25V
*	C409	1-118-035-11	CERAMIC CHIP	0.1uF	10%	25V
	C411	1-100-904-11	CERAMIC CHIP	330PF	10%	50V
	C412	1-165-492-21	ELECT CHIP	100uF	20%	10V
*	C413	1-118-035-11	CERAMIC CHIP	0.1uF	10%	25V
*	C418	1-118-035-11	CERAMIC CHIP	0.1uF	10%	25V
*	C419	1-118-035-11	CERAMIC CHIP	0.1uF	10%	25V
	C420	1-128-403-11	ELECT CHIP	47uF	20%	35V
	C421	1-118-391-11	CERAMIC CHIP	0.01uF	10%	50V
	C423	1-128-403-11	ELECT CHIP	47uF	20%	35V
	C424	1-118-391-11	CERAMIC CHIP	0.01uF	10%	50V
*	C451	1-118-035-11	CERAMIC CHIP	0.1uF	10%	25V
*	C452	1-118-035-11	CERAMIC CHIP	0.1uF	10%	25V
*	C453	1-116-720-11	CERAMIC CHIP	10uF	20%	6.3V
*	C454	1-118-035-11	CERAMIC CHIP	0.1uF	10%	25V
*	C455	1-118-035-11	CERAMIC CHIP	0.1uF	10%	25V
	C456	1-164-860-11	CERAMIC CHIP	27PF	5%	50V
	C457	1-164-860-11	CERAMIC CHIP	27PF	5%	50V
*	C459	1-118-035-11	CERAMIC CHIP	0.1uF	10%	25V
	C460	1-118-347-11	CERAMIC CHIP	0.1uF	10%	25V
	C461	1-118-347-11	CERAMIC CHIP	0.1uF	10%	25V
	C462	1-124-779-00	ELECT CHIP	10uF	20%	16V
	C463	1-118-347-11	CERAMIC CHIP	0.1uF	10%	25V
	C464	1-118-347-11	CERAMIC CHIP	0.1uF	10%	25V
	C465	1-118-347-11	CERAMIC CHIP	0.1uF	10%	25V
	C466	1-118-347-11	CERAMIC CHIP	0.1uF	10%	25V
	C467	1-118-347-11	CERAMIC CHIP	0.1uF	10%	25V
	C468	1-118-347-11	CERAMIC CHIP	0.1uF	10%	25V
	C511	1-118-347-11	CERAMIC CHIP	0.1uF	10%	25V
	C523	1-118-459-11	CERAMIC CHIP	0.01uF	10%	25V
	C524	1-118-459-11	CERAMIC CHIP	0.01uF	10%	25V
	C525	1-118-459-11	CERAMIC CHIP	0.01uF	10%	25V
	C532	1-137-765-21	ELECT CHIP	47uF	20%	16V
	C534	1-118-459-11	CERAMIC CHIP	0.01uF	10%	25V
	C535	1-118-459-11	CERAMIC CHIP	0.01uF	10%	25V
	C542	1-118-459-11	CERAMIC CHIP	0.01uF	10%	25V

	Ref. No.	Part No.	Description			Remark
*	C573	1-118-035-11	CERAMIC CHIP	0.1uF	10%	25V
*	C574	1-118-035-11	CERAMIC CHIP	0.1uF	10%	25V
	C577	1-100-588-21	ELECT CHIP	1000uF	20%	6.3V
	C601	1-118-041-11	CERAMIC CHIP	4.7uF	10%	10V
	C602	1-118-041-11	CERAMIC CHIP	4.7uF	10%	10V
	C603	1-164-936-11	CERAMIC CHIP	680PF	10%	50V
	C604	1-164-866-11	CERAMIC CHIP	47PF	5%	50V
	C605	1-165-708-11	ELECT CHIP	47uF	20%	6.3V
*	C606	1-118-035-11	CERAMIC CHIP	0.1uF	10%	25V
*	C607	1-118-035-11	CERAMIC CHIP	0.1uF	10%	25V
	C608	1-117-949-81	CERAMIC CHIP	820PF	10%	50V
	C609	1-124-779-00	ELECT CHIP	10uF	20%	16V
	C610	1-118-041-11	CERAMIC CHIP	4.7uF	10%	10V
	C612	1-118-041-11	CERAMIC CHIP	4.7uF	10%	10V
*	C613	1-118-035-11	CERAMIC CHIP	0.1uF	10%	25V
	C614	1-165-708-11	ELECT CHIP	47uF	20%	6.3V
*	C615	1-118-035-11	CERAMIC CHIP	0.1uF	10%	25V
*	C616	1-118-035-11	CERAMIC CHIP	0.1uF	10%	25V
	C617	1-118-386-11	CERAMIC CHIP	0.1uF	10%	16V
	C618	1-124-779-00	ELECT CHIP	10uF	20%	16V
	C619	1-116-707-11	CERAMIC CHIP	47uF	20%	10V
	C620	1-116-707-11	CERAMIC CHIP	47uF	20%	10V
	C621	1-116-707-11	CERAMIC CHIP	47uF	20%	10V
	C622	1-124-779-00	ELECT CHIP	10uF	20%	16V
	C624	1-164-874-11	CERAMIC CHIP	100PF	5%	50V
	C625	1-118-041-11	CERAMIC CHIP	4.7uF	10%	10V
	C626	1-116-865-11	CERAMIC CHIP	10uF	10%	25V
	C627	1-116-865-11	CERAMIC CHIP	10uF	10%	25V
*	C628	1-116-727-11	CERAMIC CHIP	2.2uF	10%	16V
	C629	1-116-716-11	CERAMIC CHIP	10uF	10%	16V
	C630	1-164-874-11	CERAMIC CHIP	100PF	5%	50V
	C631	1-118-041-11	CERAMIC CHIP	4.7uF	10%	10V
	C632	1-116-707-11	CERAMIC CHIP	47uF	20%	10V
	C633	1-164-936-11	CERAMIC CHIP	680PF	10%	50V
	C634	1-117-949-81	CERAMIC CHIP	820PF	10%	50V
	C635	1-164-866-11	CERAMIC CHIP	47PF	5%	50V
	C637	1-118-041-11	CERAMIC CHIP	4.7uF	10%	10V
	C638	1-118-041-11	CERAMIC CHIP	4.7uF	10%	10V
	C640	1-118-041-11	CERAMIC CHIP	4.7uF	10%	10V
	C641	1-164-850-11	CERAMIC CHIP	10PF	0.5PF	50V
	C642	1-164-850-11	CERAMIC CHIP	10PF	0.5PF	50V
	C643	1-164-850-11	CERAMIC CHIP	10PF	0.5PF	50V
	C644	1-164-850-11	CERAMIC CHIP	10PF	0.5PF	50V
	C645	1-124-779-00	ELECT CHIP	10uF	20%	16V
	C646	1-118-386-11	CERAMIC CHIP	0.1uF	10%	16V
	C647	1-118-041-11	CERAMIC CHIP	4.7uF	10%	10V
	C648	1-118-041-11	CERAMIC CHIP	4.7uF	10%	10V
	C649	1-112-692-11	CERAMIC CHIP	1000PF	5%	50V
	C650	1-118-041-11	CERAMIC CHIP	4.7uF	10%	10V
*	C651	1-118-035-11	CERAMIC CHIP	0.1uF	10%	25V
	C652	1-118-041-11	CERAMIC CHIP	4.7uF	10%	10V
	C653	1-118-386-11	CERAMIC CHIP	0.1uF	10%	16V
	C655	1-116-717-11	CERAMIC CHIP	10uF	20%	10V
	C656	1-116-744-11	CERAMIC CHIP	0.22uF	10%	10V
	C657	1-118-041-11	CERAMIC CHIP	4.7uF	10%	10V
	C658	1-118-041-11	CERAMIC CHIP	4.7uF	10%	10V
*	C660	1-116-727-11	CERAMIC CHIP	2.2uF	10%	16V
	C661	1-118-041-11	CERAMIC CHIP	4.7uF	10%	10V
	C662	1-118-041-11	CERAMIC CHIP	4.7uF	10%	10V
	C664	1-116-744-11	CERAMIC CHIP	0.22uF	10%	10V

MOTHERBOARD

	Ref. No.	Part No.	Description			Remark
*	C665	1-116-727-11	CERAMIC CHIP	2.2uF	10%	16V
	C666	1-118-041-11	CERAMIC CHIP	4.7uF	10%	10V
	C667	1-118-041-11	CERAMIC CHIP	4.7uF	10%	10V
	C669	1-118-403-11	CERAMIC CHIP	0.001uF	10%	50V
	C670	1-118-403-11	CERAMIC CHIP	0.001uF	10%	50V
	C672	1-124-779-00	ELECT CHIP	10uF	20%	16V
	C673	1-118-386-11	CERAMIC CHIP	0.1uF	10%	16V
	C674	1-118-386-11	CERAMIC CHIP	0.1uF	10%	16V
	C678	1-118-386-11	CERAMIC CHIP	0.1uF	10%	16V
	C679	1-116-717-11	CERAMIC CHIP	10uF	20%	10V
	C689	1-164-676-11	CERAMIC CHIP	2200PF	5%	16V
	C691	1-124-779-00	ELECT CHIP	10uF	20%	16V
	C692	1-164-676-11	CERAMIC CHIP	2200PF	5%	16V
	C694	1-216-864-11	SHORT CHIP	0		
	C695	1-118-386-11	CERAMIC CHIP	0.1uF	10%	16V
	C696	1-124-779-00	ELECT CHIP	10uF	20%	16V
	C699	1-118-386-11	CERAMIC CHIP	0.1uF	10%	16V
	C706	1-216-864-11	SHORT CHIP	0		
	C726	1-128-392-11	ELECT CHIP	470uF	20%	6.3V
	C766	1-118-041-11	CERAMIC CHIP	4.7uF	10%	10V
	C767	1-118-041-11	CERAMIC CHIP	4.7uF	10%	10V
	C904	1-118-386-11	CERAMIC CHIP	0.1uF	10%	16V
	C905	1-165-492-21	ELECT CHIP	100uF	20%	10V
	C906	1-165-908-11	CERAMIC CHIP	1uF	10%	10V
	C917	1-116-716-11	CERAMIC CHIP	10uF	10%	16V
	C922	1-118-386-11	CERAMIC CHIP	0.1uF	10%	16V
	C928	1-110-530-11	ELECT CHIP	1000uF	20%	6.3V
	C930	1-164-870-11	CERAMIC CHIP	68PF	5%	50V
	C931	1-164-866-11	CERAMIC CHIP	47PF	5%	50V
	C932	1-118-388-11	CERAMIC CHIP	0.047uF	10%	25V
	C933	1-164-850-11	CERAMIC CHIP	10PF	0.5PF	50V
	C934	1-118-399-11	CERAMIC CHIP	0.0022uF	10%	50V
	C935	1-164-840-11	CERAMIC CHIP	1PF	0.25PF	50V
	C936	1-118-399-11	CERAMIC CHIP	0.0022uF	10%	50V
	C937	1-164-840-11	CERAMIC CHIP	1PF	0.25PF	50V
*	C938	1-116-720-11	CERAMIC CHIP	10uF	20%	6.3V
*	C941	1-116-738-11	CERAMIC CHIP	1uF	10%	6.3V
*	C943	1-116-738-11	CERAMIC CHIP	1uF	10%	6.3V
	C966	1-116-744-11	CERAMIC CHIP	0.22uF	10%	10V
	C980	1-164-933-11	CERAMIC CHIP	220PF	10%	50V
	C986	1-124-779-00	ELECT CHIP	10uF	20%	16V
	C987	1-118-041-11	CERAMIC CHIP	4.7uF	10%	10V
	C988	1-118-041-11	CERAMIC CHIP	4.7uF	10%	10V
	C989	1-118-386-11	CERAMIC CHIP	0.1uF	10%	16V
	C990	1-164-858-11	CERAMIC CHIP	22PF	5%	50V
	C991	1-164-858-11	CERAMIC CHIP	22PF	5%	50V
	C994	1-118-386-11	CERAMIC CHIP	0.1uF	10%	16V
	C995	1-118-386-11	CERAMIC CHIP	0.1uF	10%	16V
	C996	1-116-732-11	CERAMIC CHIP	2.2uF	20%	6.3V
	C997	1-116-732-11	CERAMIC CHIP	2.2uF	20%	6.3V
	C998	1-118-386-11	CERAMIC CHIP	0.1uF	10%	16V
	C1000	1-124-779-00	ELECT CHIP	10uF	20%	16V
	C1001	1-118-403-11	CERAMIC CHIP	0.001uF	10%	50V
	C1002	1-118-386-11	CERAMIC CHIP	0.1uF	10%	16V
	C1003	1-118-403-11	CERAMIC CHIP	0.001uF	10%	50V
			< CONNECTOR >			
	CN001	1-816-296-21	PIN, CONNECTOR (PC BOARD) 9P			
	CN101	1-844-158-11	PIN, CONNECTOR (PC BOARD) 5P			(FOR SERVICE USE)
	CN102	1-820-825-81	CONNECTOR, FFC/FPC (LIF) 10P			

Ref. No.	Part No.	Description	Remark
CN105	1-844-279-11	FFC ST CONNECTOR (NON-ZIF) 6P	
CN109	1-820-119-51	CONNECTOR, FFC/FPC 21P	
CN116	1-820-119-51	CONNECTOR, FFC/FPC 21P	
CN302	1-844-191-11	FFC ST CONNECTOR (NON-ZIF) 24P	
CN303	1-794-362-51	CONNECTOR, FFC/FPC 5P	
CN401	1-770-470-21	PIN, CONNECTOR (PC BOARD) 6P	
CN501	1-843-881-11	PIN, CONNECTOR (PC BOARD) 4P	(LED SPEAKER R)
CN502	1-843-881-11	PIN, CONNECTOR (PC BOARD) 4P	(LED SPEAKER L)
CN601	1-843-888-11	PIN, CONNECTOR (PC BOARD) 4P	
CN2001	1-774-730-21	PIN, CONNECTOR (PC BOARD) 3P	(ANTENNA FM/AM)
		< DIODE >	
D102	6-502-961-01	DI DA2J10100L	
D401	8-719-069-29	DIODE RB520S-30FJTE61	
D402	8-719-069-29	DIODE RB520S-30FJTE61	
D571	6-502-961-01	DI DA2J10100L	
D572	6-502-961-01	DI DA2J10100L	
D600	6-500-400-01	DIODE BAV99-215	
D601	6-500-400-01	DIODE BAV99-215	
D602	6-500-400-01	DIODE BAV99-215	
		< FERRITE BEAD >	
FB101	1-481-515-11	BEAD, FERRITE (1608)	
FB115	1-400-851-11	EMI, FERRITE (SMD) (1005)	
FB117	1-400-851-11	EMI, FERRITE (SMD) (1005)	
FB320	1-481-348-21	EMI FERRITE (SMD) (1608)	
FB321	1-481-348-21	EMI FERRITE (SMD) (1608)	
FB453	1-481-348-21	EMI FERRITE (SMD) (1608)	
FB455	1-481-348-21	EMI FERRITE (SMD) (1608)	
		< FILTER >	
FL301	1-234-494-21	FILTER, EMI REMOVAL (SMD)	
		< IC >	
IC002	(Not supplied)	IC TPS542941PWPR	
IC004	6-721-872-01	IC 78D09AG-TN3-R	
IC006	6-721-766-01	IC 78D05AG-TN3-R	
IC008	6-719-198-01	IC MM3411A33URE	
IC009	6-721-148-01	IC TPS54394 PWPR	
IC101	(Not supplied)	IC R7S7200032CFP-A	
IC102	6-707-866-01	IC TC74VHC126FT (EK)	
IC103	6-719-856-01	IC BU4229F-TR	
IC105	(Not supplied)	IC MFI337S3959	
IC106	(Not supplied)	IC MX25L3235EM2I-10G	
IC301	(Not supplied)	IC CXD9990R	
IC302	(Not supplied)	IC MX25L3235EM2I-10G	
IC303	(Not supplied)	IC BD00IC0WHFV-GTR	
IC304	6-714-351-01	IC R1EX24016ASAS0A	
IC305	6-717-694-01	IC BU33TD3WG-TR	
IC306	6-720-220-01	IC M12L64164A-7TG2Y	
IC401	6-720-195-01	IC AM5890S	
* IC451	6-721-151-01	IC GL850G-OGY33	
IC452	6-721-822-01	IC NJM2903CV (TE1)	
IC453	6-721-811-01	IC TC7USB40FT	
IC502	6-719-142-01	IC TC62D723FNG	
IC601	8-759-909-71	IC BA4558F	
IC602	8-759-596-39	IC SN74LV4052APWR	

Note: IC002, IC101, IC105, IC106, IC301, IC302 and IC303 on the MOTHERBOARD board cannot exchange with single. When these parts on the MOTHERBOARD board are damaged, exchange the entire mounted board.

Ref. No.	Part No.	Description	Remark
IC603	8-759-909-71	IC BA4558F	
IC604	6-705-973-01	IC PCM1754DBQR	
IC605	8-759-596-39	IC SN74LV4052APWR	
IC606	6-710-554-01	IC PCM1808PWR	
IC609	6-710-554-01	IC PCM1808PWR	
IC901	6-720-187-01	IC NJM41031F1 (TE2)	
IC902	6-720-234-01	IC RN5B801-0002	
IC903	6-719-198-01	IC MM3411A33URE	
IC913	8-759-680-48	IC TC7WH157FK	
IC914	6-721-848-01	IC PCM5101	
		< JACK >	
J601	1-843-547-11	JACK, PIN 6P (AUDIO IN 2 L/R, AUDIO IN 1 R, PARTY CHAIN IN L, AUDIO OUT R, PARTY CHAIN OUT L)	
J907	1-794-970-11	JACK, PIN 1P (VIDEO OUT)	
		< JUMPER >	
JC001	1-216-295-91	SHORT CHIP 0	
JC002	1-216-295-91	SHORT CHIP 0	
JC003	1-216-295-91	SHORT CHIP 0	
JC004	1-216-295-91	SHORT CHIP 0	
JC005	1-216-295-91	SHORT CHIP 0	
JC006	1-216-295-91	SHORT CHIP 0	
JC007	1-216-295-91	SHORT CHIP 0	
JC008	1-216-295-91	SHORT CHIP 0	
		< COIL >	
L002	1-460-358-11	INDUCTOR 2.2uH	
L003	1-400-789-21	INDUCTOR 2.2uH	
L004	1-400-789-21	INDUCTOR 2.2uH	
L006	1-457-439-11	INDUCTOR 4.7uH	
L007	1-460-358-11	INDUCTOR 2.2uH	
L008	1-400-789-21	INDUCTOR 2.2uH	
L009	1-457-439-11	INDUCTOR 4.7uH	
L301	1-400-793-21	INDUCTOR 47uH	
L600	1-460-776-11	COIL, AM ANTENNA (SMT)	
L603	1-469-187-21	INDUCTOR 68nH	
L604	1-469-187-21	INDUCTOR 68nH	
L605	1-414-832-11	INDUCTOR 2.2nH	
		< TRANSISTOR >	
Q004	6-553-509-01	TR KTA1542T-RTK/P	
Q005	6-553-509-01	TR KTA1542T-RTK/P	
Q006	8-729-054-16	TRANSISTOR KRC402-RTK	
Q007	6-553-509-01	TR KTA1542T-RTK/P	
Q008	6-553-509-01	TR KTA1542T-RTK/P	
Q009	8-729-054-16	TRANSISTOR KRC402-RTK	
Q011	6-553-509-01	TR KTA1542T-RTK/P	
Q012	8-729-054-16	TRANSISTOR KRC402-RTK	
Q103	6-553-509-01	TR KTA1542T-RTK/P	
Q104	8-729-054-16	TRANSISTOR KRC402-RTK	
Q107	8-729-054-16	TRANSISTOR KRC402-RTK	
Q108	8-729-054-16	TRANSISTOR KRC402-RTK	
Q109	8-729-054-16	TRANSISTOR KRC402-RTK	
Q401	6-551-120-01	TRANSISTOR 2SA2119K	
Q402	6-551-120-01	TRANSISTOR 2SA2119K	
Q457	6-550-987-01	TR RN1911	
Q459	6-553-509-01	TR KTA1542T-RTK/P	
Q461	8-729-054-16	TRANSISTOR KRC402-RTK	

Ref. No.	Part No.	Description	Remark
Q571	8-729-054-16	TRANSISTOR KRC402-RTK	
Q572	6-553-509-01	TR KTA1542T-RTK/P	
Q574	6-552-967-01	TR RHK005N03T146	
Q575	6-552-922-01	TR LTA014EUBFS8TL	
Q576	8-729-054-16	TRANSISTOR KRC402-RTK	
* Q602	6-551-959-01	TR IMX25T110	
Q603	6-551-039-01	TRANSISTOR RN4902 (T5RSONY, D, F)	
Q604	6-550-978-01	TR RN1902	
Q605	8-729-427-72	TRANSISTOR XP4501	
Q606	6-552-922-01	TR LTA014EUBFS8TL	
Q607	6-551-039-01	TRANSISTOR RN4902 (T5RSONY, D, F)	
Q611	6-550-978-01	TR RN1902	
		< RESISTOR >	
R002	1-208-709-11	METAL CHIP 12K 0.5% 1/16W	
R003	1-208-923-11	METAL CHIP 33K 0.5% 1/16W	
R006	1-208-911-11	METAL CHIP 10K 0.5% 1/16W	
R020	1-216-864-11	SHORT CHIP 0	
R023	1-218-974-11	METAL CHIP 56K 5% 1/16W	
R024	1-208-895-81	METAL CHIP 2.2K 0.5% 1/16W	
R028	1-218-965-11	METAL CHIP 10K 5% 1/16W	
R029	1-216-843-11	METAL CHIP 68K 5% 1/10W	
R030	1-218-843-11	METAL CHIP 680 0.5% 1/10W	
R031	1-208-911-11	METAL CHIP 10K 0.5% 1/16W	
R033	1-216-827-11	METAL CHIP 3.3K 5% 1/10W	
R034	1-216-813-11	METAL CHIP 220 5% 1/10W	
R035	1-216-827-11	METAL CHIP 3.3K 5% 1/10W	
R036	1-216-864-11	SHORT CHIP 0	
R037	1-218-965-11	METAL CHIP 10K 5% 1/16W	
R039	1-218-965-11	METAL CHIP 10K 5% 1/16W	
R040	1-216-817-11	METAL CHIP 470 5% 1/10W	
R041	1-208-709-11	METAL CHIP 12K 0.5% 1/16W	
R043	1-208-715-11	METAL CHIP 22K 0.5% 1/16W	
R048	1-216-864-11	SHORT CHIP 0	
R051	1-216-295-91	SHORT CHIP 0	
R052	1-216-295-91	SHORT CHIP 0	
R053	1-216-864-11	SHORT CHIP 0	
R054	1-216-864-11	SHORT CHIP 0	
R059	1-208-931-11	METAL CHIP 68K 0.5% 1/16W	
R061	1-218-965-11	METAL CHIP 10K 5% 1/16W	
R062	1-216-813-11	METAL CHIP 220 5% 1/10W	
R063	1-216-864-11	SHORT CHIP 0	
R064	1-216-843-11	METAL CHIP 68K 5% 1/10W	
R065	1-216-827-11	METAL CHIP 3.3K 5% 1/10W	
R066	1-216-827-11	METAL CHIP 3.3K 5% 1/10W	
R080	1-216-864-11	SHORT CHIP 0	
R086	1-216-295-91	SHORT CHIP 0	
R087	1-216-295-91	SHORT CHIP 0	
R100	1-218-937-11	METAL CHIP 47 5% 1/16W	
R102	1-218-941-81	METAL CHIP 100 5% 1/16W	
R103	1-218-965-11	METAL CHIP 10K 5% 1/16W	
R104	1-218-947-11	METAL CHIP 330 5% 1/16W (SHAKEX3)	
R104	1-218-957-11	METAL CHIP 2.2K 5% 1/16W (SHAKEX1)	
R104	1-218-961-11	METAL CHIP 4.7K 5% 1/16W (SHAKEX7)	
R105	1-218-941-81	METAL CHIP 100 5% 1/16W	
R106	1-218-965-11	METAL CHIP 10K 5% 1/16W	
R107	1-218-965-11	METAL CHIP 10K 5% 1/16W	
R108	1-218-965-11	METAL CHIP 10K 5% 1/16W	

MOTHERBOARD

Ref. No.	Part No.	Description			Remark
R109	1-218-957-11	METAL CHIP	2.2K	5%	1/16W
R110	1-218-977-11	METAL CHIP	100K	5%	1/16W
R111	1-218-977-11	METAL CHIP	100K	5%	1/16W
R112	1-218-977-11	METAL CHIP	100K	5%	1/16W
R113	1-216-864-11	SHORT CHIP	0		
R114	1-216-864-11	SHORT CHIP	0		
R115	1-218-953-11	METAL CHIP	1K	5%	1/16W
R116	1-218-973-11	METAL CHIP	47K	5%	1/16W
R117	1-218-963-11	METAL CHIP	6.8K	5%	1/16W
R119	1-218-965-11	METAL CHIP	10K	5%	1/16W
R120	1-218-973-11	METAL CHIP	47K	5%	1/16W
R122	1-218-990-81	SHORT CHIP	0		
R123	1-218-965-11	METAL CHIP	10K	5%	1/16W
R125	1-218-973-11	METAL CHIP	47K	5%	1/16W
R126	1-218-990-81	SHORT CHIP	0		
R127	1-218-965-11	METAL CHIP	10K	5%	1/16W
R128	1-218-953-11	METAL CHIP	1K	5%	1/16W
R129	1-218-941-81	METAL CHIP	100	5%	1/16W
R131	1-218-941-81	METAL CHIP	100	5%	1/16W
R132	1-218-937-11	METAL CHIP	47	5%	1/16W
R133	1-218-937-11	METAL CHIP	47	5%	1/16W
R134	1-218-937-11	METAL CHIP	47	5%	1/16W
R135	1-218-937-11	METAL CHIP	47	5%	1/16W
R137	1-218-969-11	METAL CHIP	22K	5%	1/16W
R139	1-218-969-11	METAL CHIP	22K	5%	1/16W
R140	1-218-969-11	METAL CHIP	22K	5%	1/16W
R143	1-218-969-11	METAL CHIP	22K	5%	1/16W
R144	1-218-967-11	METAL CHIP	15K	5%	1/16W
R145	1-218-967-11	METAL CHIP	15K	5%	1/16W
R146	1-218-965-11	METAL CHIP	10K	5%	1/16W
R149	1-218-965-11	METAL CHIP	10K	5%	1/16W
R151	1-218-965-11	METAL CHIP	10K	5%	1/16W
R153	1-218-941-81	METAL CHIP	100	5%	1/16W
R154	1-218-941-81	METAL CHIP	100	5%	1/16W
R155	1-218-941-81	METAL CHIP	100	5%	1/16W
R156	1-218-941-81	METAL CHIP	100	5%	1/16W
R157	1-218-953-11	METAL CHIP	1K	5%	1/16W
R158	1-218-949-11	METAL CHIP	470	5%	1/16W
R159	1-218-949-11	METAL CHIP	470	5%	1/16W
R160	1-218-961-11	METAL CHIP	4.7K	5%	1/16W
R161	1-218-965-11	METAL CHIP	10K	5%	1/16W
R163	1-218-990-81	SHORT CHIP	0		
R164	1-218-941-81	METAL CHIP	100	5%	1/16W
R166	1-218-941-81	METAL CHIP	100	5%	1/16W
R167	1-218-961-11	METAL CHIP	4.7K	5%	1/16W
R168	1-218-941-81	METAL CHIP	100	5%	1/16W
R170	1-218-937-11	METAL CHIP	47	5%	1/16W
R171	1-218-941-81	METAL CHIP	100	5%	1/16W
R172	1-218-941-81	METAL CHIP	100	5%	1/16W
R173	1-218-941-81	METAL CHIP	100	5%	1/16W
R174	1-218-941-81	METAL CHIP	100	5%	1/16W
R175	1-218-965-11	METAL CHIP	10K	5%	1/16W
R176	1-218-941-81	METAL CHIP	100	5%	1/16W
R177	1-218-941-81	METAL CHIP	100	5%	1/16W
R178	1-218-941-81	METAL CHIP	100	5%	1/16W
R179	1-218-941-81	METAL CHIP	100	5%	1/16W
R180	1-218-941-81	METAL CHIP	100	5%	1/16W
R181	1-218-941-81	METAL CHIP	100	5%	1/16W
R182	1-218-965-11	METAL CHIP	10K	5%	1/16W
R183	1-218-965-11	METAL CHIP	10K	5%	1/16W
R185	1-218-990-81	SHORT CHIP	0		
R186	1-218-990-81	SHORT CHIP	0		
R188	1-218-989-11	METAL CHIP	1M	5%	1/16W
R189	1-218-941-81	METAL CHIP	100	5%	1/16W
R190	1-218-977-11	METAL CHIP	100K	5%	1/16W
R191	1-218-941-81	METAL CHIP	100	5%	1/16W
R192	1-218-961-11	METAL CHIP	4.7K	5%	1/16W
R193	1-218-941-81	METAL CHIP	100	5%	1/16W
R194	1-218-965-11	METAL CHIP	10K	5%	1/16W
R195	1-218-965-11	METAL CHIP	10K	5%	1/16W
R196	1-250-567-11	METAL CHIP	1M	1%	1/16W
R197	1-218-941-81	METAL CHIP	100	5%	1/16W
R200	1-218-990-81	SHORT CHIP	0		
R201	1-218-941-81	METAL CHIP	100	5%	1/16W
R202	1-218-965-11	METAL CHIP	10K	5%	1/16W
R203	1-218-941-81	METAL CHIP	100	5%	1/16W
R204	1-218-965-11	METAL CHIP	10K	5%	1/16W
R205	1-218-941-81	METAL CHIP	100	5%	1/16W
R206	1-218-965-11	METAL CHIP	10K	5%	1/16W
R207	1-216-864-11	SHORT CHIP	0		
R209	1-208-911-11	METAL CHIP	10K	0.5%	1/16W
R210	1-218-937-11	METAL CHIP	47	5%	1/16W
R211	1-218-941-81	METAL CHIP	100	5%	1/16W
R212	1-218-937-11	METAL CHIP	47	5%	1/16W
R213	1-218-941-81	METAL CHIP	100	5%	1/16W
R214	1-218-937-11	METAL CHIP	47	5%	1/16W
R215	1-218-941-81	METAL CHIP	100	5%	1/16W
R216	1-218-965-11	METAL CHIP	10K	5%	1/16W
R217	1-218-937-11	METAL CHIP	47	5%	1/16W
R218	1-218-941-81	METAL CHIP	100	5%	1/16W
R219	1-218-941-81	METAL CHIP	100	5%	1/16W
R220	1-218-937-11	METAL CHIP	47	5%	1/16W
R221	1-218-941-81	METAL CHIP	100	5%	1/16W
R222	1-218-965-11	METAL CHIP	10K	5%	1/16W
R223	1-218-941-81	METAL CHIP	100	5%	1/16W
R224	1-218-990-81	SHORT CHIP	0		
R225	1-218-941-81	METAL CHIP	100	5%	1/16W
R226	1-218-941-81	METAL CHIP	100	5%	1/16W
R227	1-218-941-81	METAL CHIP	100	5%	1/16W
R228	1-218-941-81	METAL CHIP	100	5%	1/16W
R229	1-218-941-81	METAL CHIP	100	5%	1/16W
R230	1-218-941-81	METAL CHIP	100	5%	1/16W
R232	1-218-937-11	METAL CHIP	47	5%	1/16W
R233	1-218-941-81	METAL CHIP	100	5%	1/16W
R234	1-218-941-81	METAL CHIP	100	5%	1/16W
R236	1-218-941-81	METAL CHIP	100	5%	1/16W
R237	1-218-941-81	METAL CHIP	100	5%	1/16W
R238	1-218-941-81	METAL CHIP	100	5%	1/16W
R239	1-218-941-81	METAL CHIP	100	5%	1/16W
R241	1-218-941-81	METAL CHIP	100	5%	1/16W
R242	1-218-941-81	METAL CHIP	100	5%	1/16W
R243	1-218-941-81	METAL CHIP	100	5%	1/16W
R244	1-218-961-11	METAL CHIP	4.7K	5%	1/16W
R245	1-218-941-81	METAL CHIP	100	5%	1/16W
R246	1-218-961-11	METAL CHIP	4.7K	5%	1/16W
R248	1-218-941-81	METAL CHIP	100	5%	1/16W
R249	1-216-864-11	SHORT CHIP	0		
R250	1-218-961-11	METAL CHIP	4.7K	5%	1/16W
R251	1-218-941-81	METAL CHIP	100	5%	1/16W
R252	1-218-941-81	METAL CHIP	100	5%	1/16W

Ref. No.	Part No.	Description			Remark
R253	1-218-961-11	METAL CHIP	4.7K	5%	1/16W
R254	1-218-941-81	METAL CHIP	100	5%	1/16W
R255	1-218-941-81	METAL CHIP	100	5%	1/16W
R256	1-218-965-11	METAL CHIP	10K	5%	1/16W
R257	1-218-941-81	METAL CHIP	100	5%	1/16W
R259	1-218-965-11	METAL CHIP	10K	5%	1/16W
R261	1-218-990-81	SHORT CHIP	0		
R262	1-216-864-11	SHORT CHIP	0		
R263	1-218-965-11	METAL CHIP	10K	5%	1/16W
R265	1-250-471-11	METAL CHIP	100	1%	1/16W
R266	1-218-941-81	METAL CHIP	100	5%	1/16W
R267	1-218-965-11	METAL CHIP	10K	5%	1/16W
R269	1-218-989-11	METAL CHIP	1M	5%	1/16W
R270	1-218-941-81	METAL CHIP	100	5%	1/16W
R271	1-218-941-81	METAL CHIP	100	5%	1/16W
R272	1-218-941-81	METAL CHIP	100	5%	1/16W
R273	1-218-941-81	METAL CHIP	100	5%	1/16W
R274	1-218-941-81	METAL CHIP	100	5%	1/16W
R275	1-218-949-11	METAL CHIP	470	5%	1/16W
R276	1-218-941-81	METAL CHIP	100	5%	1/16W
R277	1-218-937-11	METAL CHIP	47	5%	1/16W
R278	1-218-941-81	METAL CHIP	100	5%	1/16W
R279	1-218-941-81	METAL CHIP	100	5%	1/16W
R280	1-218-941-81	METAL CHIP	100	5%	1/16W
R282	1-218-965-11	METAL CHIP	10K	5%	1/16W
R283	1-218-965-11	METAL CHIP	10K	5%	1/16W
R284	1-218-965-11	METAL CHIP	10K	5%	1/16W
R285	1-208-905-11	METAL CHIP	5.6K	0.5%	1/16W
R286	1-218-977-11	METAL CHIP	100K	5%	1/16W
R287	1-218-977-11	METAL CHIP	100K	5%	1/16W
R288	1-218-937-11	METAL CHIP	47	5%	1/16W
R289	1-218-937-11	METAL CHIP	47	5%	1/16W
R290	1-218-937-11	METAL CHIP	47	5%	1/16W
R291	1-218-937-11	METAL CHIP	47	5%	1/16W
R292	1-218-937-11	METAL CHIP	47	5%	1/16W
R293	1-218-937-11	METAL CHIP	47	5%	1/16W
R294	1-218-977-11	METAL CHIP	100K	5%	1/16W
R295	1-218-941-81	METAL CHIP	100	5%	1/16W
R297	1-218-941-81	METAL CHIP	100	5%	1/16W
R298	1-218-965-11	METAL CHIP	10K	5%	1/16W
R300	1-218-965-11	METAL CHIP	10K	5%	1/16W
R301	1-218-941-81	METAL CHIP	100	5%	1/16W
* R302	1-250-529-11	METAL CHIP	27K	1%	1/16W
R303	1-250-535-11	METAL CHIP	47K	1%	1/16W
R310	1-218-961-11	METAL CHIP	4.7K	5%	1/16W
R312	1-218-953-11	METAL CHIP	1K	5%	1/16W
R313	1-218-953-11	METAL CHIP	1K	5%	1/16W
R316	1-218-953-11	METAL CHIP	1K	5%	1/16W
R317	1-218-953-11	METAL CHIP	1K	5%	1/16W
R318	1-218-965-11	METAL CHIP	10K	5%	1/16W
R319	1-218-965-11	METAL CHIP	10K	5%	1/16W
R321	1-218-941-81	METAL CHIP	100	5%	1/16W
R322	1-216-864-11	SHORT CHIP	0		
R326	1-216-864-11	SHORT CHIP	0		
R327	1-218-937-11	METAL CHIP	47	5%	1/16W
R328	1-216-798-11	METAL CHIP	12	5%	1/10W
R329	1-216-864-11	SHORT CHIP	0		
R330	1-218-967-11	METAL CHIP	15K	5%	1/16W
R331	1-218-937-11	METAL CHIP	47	5%	1/16W
R332	1-250-483-11	METAL CHIP	330	1%	1/16W

Ref. No.	Part No.	Description			Remark
* R334	1-250-543-11	METAL CHIP	100K	1%	1/16W
R335	1-216-864-11	SHORT CHIP	0		
R337	1-216-864-11	SHORT CHIP	0		
R339	1-250-512-11	METAL CHIP	5.1K	1%	1/16W
R340	1-218-937-11	METAL CHIP	47	5%	1/16W
R342	1-218-937-11	METAL CHIP	47	5%	1/16W
R343	1-218-959-11	METAL CHIP	3.3K	5%	1/16W
R344	1-218-941-81	METAL CHIP	100	5%	1/16W
R345	1-218-941-81	METAL CHIP	100	5%	1/16W
R346	1-218-959-11	METAL CHIP	3.3K	5%	1/16W
R347	1-218-990-81	SHORT CHIP	0		
R348	1-218-961-11	METAL CHIP	4.7K	5%	1/16W
R349	1-218-941-81	METAL CHIP	100	5%	1/16W
R350	1-218-990-81	SHORT CHIP	0		
R351	1-218-965-11	METAL CHIP	10K	5%	1/16W
R352	1-218-941-81	METAL CHIP	100	5%	1/16W
R354	1-218-990-81	SHORT CHIP	0		
R355	1-218-990-81	SHORT CHIP	0		
R356	1-218-937-11	METAL CHIP	47	5%	1/16W
R357	1-218-959-11	METAL CHIP	3.3K	5%	1/16W
R358	1-218-941-81	METAL CHIP	100	5%	1/16W
R359	1-218-953-11	METAL CHIP	1K	5%	1/16W
R360	1-218-941-81	METAL CHIP	100	5%	1/16W
R361	1-218-961-11	METAL CHIP	4.7K	5%	1/16W
R362	1-218-965-11	METAL CHIP	10K	5%	1/16W
R363	1-218-990-81	SHORT CHIP	0		
R364	1-218-990-81	SHORT CHIP	0		
R365	1-218-937-11	METAL CHIP	47	5%	1/16W
R366	1-218-990-81	SHORT CHIP	0		
R367	1-218-947-11	METAL CHIP	330	5%	1/16W
R368	1-250-475-11	METAL CHIP	150	1%	1/16W
R369	1-218-933-11	METAL CHIP	22	5%	1/16W
* R370	1-250-489-11	METAL CHIP	560	1%	1/16W
R371	1-216-864-11	SHORT CHIP	0		
R372	1-218-965-11	METAL CHIP	10K	5%	1/16W
R373	1-216-864-11	SHORT CHIP	0		
R374	1-218-965-11	METAL CHIP	10K	5%	1/16W
R376	1-218-961-11	METAL CHIP	4.7K	5%	1/16W
R377	1-218-961-11	METAL CHIP	4.7K	5%	1/16W
R378	1-216-864-11	SHORT CHIP	0		
R379	1-218-933-11	METAL CHIP	22	5%	1/16W
R380	1-218-941-81	METAL CHIP	100	5%	1/16W
R381	1-218-965-11	METAL CHIP	10K	5%	1/16W
R382	1-218-965-11	METAL CHIP	10K	5%	1/16W
R386	1-469-670-21	FERRITE, EMI (SMD) (2012)			
R387	1-218-959-11	METAL CHIP	3.3K	5%	1/16W
R388	1-218-977-11	METAL CHIP	100K	5%	1/16W
R389	1-218-941-81	METAL CHIP	100	5%	1/16W
R390	1-218-929-11	METAL CHIP	10	5%	1/16W
R401	1-218-965-11	METAL CHIP	10K	5%	1/16W
R402	1-218-970-81	METAL CHIP	27K	5%	1/16W
R404	1-257-362-21	METAL CHIP	1	5%	1/2W
R406	1-218-990-81	SHORT CHIP	0		
R407	1-218-990-81	SHORT CHIP	0		
R408	1-218-965-11	METAL CHIP	10K	5%	1/16W
R409	1-218-965-11	METAL CHIP	10K	5%	1/16W
R410	1-218-965-11	METAL CHIP	10K	5%	1/16W
R411	1-218-965-11	METAL CHIP	10K	5%	1/16W
R415	1-218-970-81	METAL CHIP	27K	5%	1/16W
R418	1-218-967-11	METAL CHIP	15K	5%	1/16W

MOTHERBOARD

	Ref. No.	Part No.	Description			Remark
	R421	1-218-941-81	METAL CHIP	100	5%	1/16W
	R422	1-218-973-11	METAL CHIP	47K	5%	1/16W
*	R423	1-250-572-11	METAL CHIP	15	1%	1/10W
	R424	1-218-977-11	METAL CHIP	100K	5%	1/16W
*	R425	1-250-572-11	METAL CHIP	15	1%	1/10W
*	R426	1-250-572-11	METAL CHIP	15	1%	1/10W
*	R427	1-250-572-11	METAL CHIP	15	1%	1/10W
*	R428	1-250-572-11	METAL CHIP	15	1%	1/10W
	R429	1-218-977-11	METAL CHIP	100K	5%	1/16W
*	R430	1-250-572-11	METAL CHIP	15	1%	1/10W
	R431	1-218-973-11	METAL CHIP	47K	5%	1/16W
	R432	1-218-941-81	METAL CHIP	100	5%	1/16W
	R433	1-216-295-91	SHORT CHIP	0		
	R451	1-218-990-81	SHORT CHIP	0		
	R452	1-218-965-11	METAL CHIP	10K	5%	1/16W
	R453	1-218-977-11	METAL CHIP	100K	5%	1/16W
	R454	1-218-965-11	METAL CHIP	10K	5%	1/16W
	R455	1-218-965-11	METAL CHIP	10K	5%	1/16W
	R456	1-218-953-11	METAL CHIP	1K	5%	1/16W
	R457	1-218-953-11	METAL CHIP	1K	5%	1/16W
	R458	1-218-990-81	SHORT CHIP	0		
*	R460	1-250-491-11	METAL CHIP	680	1%	1/16W
	R462	1-218-941-81	METAL CHIP	100	5%	1/16W
	R463	1-218-958-11	METAL CHIP	2.7K	5%	1/16W
	R464	1-218-971-81	METAL CHIP	33K	5%	1/16W
	R465	1-218-941-81	METAL CHIP	100	5%	1/16W
	R470	1-218-990-81	SHORT CHIP	0		
	R471	1-218-990-81	SHORT CHIP	0		
	R472	1-218-990-81	SHORT CHIP	0		
	R473	1-218-990-81	SHORT CHIP	0		
	R476	1-218-990-81	SHORT CHIP	0		
	R478	1-216-864-11	SHORT CHIP	0		
	R479	1-218-981-81	METAL CHIP	220K	5%	1/16W
	R480	1-218-990-81	SHORT CHIP	0		
	R483	1-218-953-11	METAL CHIP	1K	5%	1/16W
	R485	1-218-953-11	METAL CHIP	1K	5%	1/16W
	R487	1-220-804-11	METAL CHIP	2.2M	5%	1/16W
	R489	1-250-515-11	METAL CHIP	6.8K	1%	1/16W
	R491	1-218-965-11	METAL CHIP	10K	5%	1/16W
	R493	1-218-971-81	METAL CHIP	33K	5%	1/16W
	R494	1-218-949-11	METAL CHIP	470	5%	1/16W
	R496	1-218-957-11	METAL CHIP	2.2K	5%	1/16W
	R497	1-248-311-11	RES-CHIP	0.1	1%	1/4W
	R498	1-248-311-11	RES-CHIP	0.1	1%	1/4W
	R500	1-218-990-81	SHORT CHIP	0		
	R505	1-218-935-11	METAL CHIP	33	5%	1/16W (SHAKEX1/SHAKEX3)
	R505	1-218-937-11	METAL CHIP	47	5%	1/16W (SHAKEX7)
	R517	1-218-935-11	METAL CHIP	33	5%	1/16W (SHAKEX1/SHAKEX3)
	R517	1-218-937-11	METAL CHIP	47	5%	1/16W (SHAKEX7)
	R520	1-218-935-11	METAL CHIP	33	5%	1/16W (SHAKEX1/SHAKEX3)
	R520	1-218-937-11	METAL CHIP	47	5%	1/16W (SHAKEX7)
	R522	1-216-295-91	SHORT CHIP	0 (SHAKEX7)		
	R524	1-218-935-11	METAL CHIP	33	5%	1/16W (SHAKEX1/SHAKEX3)
	R524	1-218-937-11	METAL CHIP	47	5%	1/16W (SHAKEX7)
	R527	1-216-864-11	SHORT CHIP	0		
	R534	1-218-952-11	METAL CHIP	820	5%	1/16W
	R538	1-216-295-91	SHORT CHIP	0 (SHAKEX1/SHAKEX3)		
	R541	1-216-809-11	METAL CHIP	100	5%	1/10W
	R542	1-216-809-11	METAL CHIP	100	5%	1/10W
	R543	1-216-809-11	METAL CHIP	100	5%	1/10W
	R559	1-218-965-11	METAL CHIP	10K	5%	1/16W
	R561	1-218-935-11	METAL CHIP	33	5%	1/16W (SHAKEX1/SHAKEX3)
	R561	1-218-937-11	METAL CHIP	47	5%	1/16W (SHAKEX7)
	R562	1-218-935-11	METAL CHIP	33	5%	1/16W (SHAKEX1/SHAKEX3)
	R562	1-218-937-11	METAL CHIP	47	5%	1/16W (SHAKEX7)
	R569	1-216-809-11	METAL CHIP	100	5%	1/10W
	R571	1-218-981-81	METAL CHIP	220K	5%	1/16W
	R574	1-218-937-11	METAL CHIP	47	5%	1/16W
	R576	1-218-941-81	METAL CHIP	100	5%	1/16W
	R577	1-218-949-11	METAL CHIP	470	5%	1/16W
	R578	1-218-990-81	SHORT CHIP	0		
	R579	1-218-990-81	SHORT CHIP	0		
	R580	1-218-990-81	SHORT CHIP	0		
	R582	1-218-941-81	METAL CHIP	100	5%	1/16W
	R583	1-248-311-11	RES-CHIP	0.1	1%	1/4W
	R584	1-248-311-11	RES-CHIP	0.1	1%	1/4W
	R585	1-218-990-81	SHORT CHIP	0		
	R586	1-218-990-81	SHORT CHIP	0		
	R587	1-218-965-11	METAL CHIP	10K	5%	1/16W
	R588	1-218-965-11	METAL CHIP	10K	5%	1/16W
	R589	1-218-965-11	METAL CHIP	10K	5%	1/16W
	R590	1-218-990-81	SHORT CHIP	0		
	R600	1-208-931-11	METAL CHIP	68K	0.5%	1/16W
	R602	1-218-973-11	METAL CHIP	47K	5%	1/16W
	R603	1-218-973-11	METAL CHIP	47K	5%	1/16W
	R604	1-218-973-11	METAL CHIP	47K	5%	1/16W
	R605	1-218-989-11	METAL CHIP	1M	5%	1/16W
	R606	1-218-990-81	SHORT CHIP	0		
	R607	1-218-985-11	METAL CHIP	470K	5%	1/16W
	R608	1-218-961-11	METAL CHIP	4.7K	5%	1/16W
	R609	1-218-961-11	METAL CHIP	4.7K	5%	1/16W
	R610	1-218-973-11	METAL CHIP	47K	5%	1/16W
	R611	1-218-973-11	METAL CHIP	47K	5%	1/16W
	R612	1-218-973-11	METAL CHIP	47K	5%	1/16W
	R613	1-218-989-11	METAL CHIP	1M	5%	1/16W
	R614	1-218-965-11	METAL CHIP	10K	5%	1/16W
	R615	1-218-985-11	METAL CHIP	470K	5%	1/16W
	R616	1-218-961-11	METAL CHIP	4.7K	5%	1/16W
	R617	1-218-955-11	METAL CHIP	1.5K	5%	1/16W
	R618	1-218-958-11	METAL CHIP	2.7K	5%	1/16W
	R619	1-218-958-11	METAL CHIP	2.7K	5%	1/16W
	R620	1-218-959-11	METAL CHIP	3.3K	5%	1/16W
	R621	1-218-990-81	SHORT CHIP	0		
	R622	1-218-961-11	METAL CHIP	4.7K	5%	1/16W
	R624	1-218-957-11	METAL CHIP	2.2K	5%	1/16W
	R625	1-218-957-11	METAL CHIP	2.2K	5%	1/16W
	R626	1-218-961-11	METAL CHIP	4.7K	5%	1/16W
	R627	1-218-961-11	METAL CHIP	4.7K	5%	1/16W
	R628	1-218-961-11	METAL CHIP	4.7K	5%	1/16W

Ref. No.	Part No.	Description			Remark
R629	1-216-864-11	SHORT CHIP	0		
R630	1-218-929-11	METAL CHIP	10	5%	1/16W
R631	1-218-929-11	METAL CHIP	10	5%	1/16W
R632	1-218-929-11	METAL CHIP	10	5%	1/16W
R633	1-218-973-11	METAL CHIP	47K	5%	1/16W
R634	1-218-989-11	METAL CHIP	1M	5%	1/16W
R635	1-218-973-11	METAL CHIP	47K	5%	1/16W
R636	1-218-973-11	METAL CHIP	47K	5%	1/16W
R638	1-218-955-11	METAL CHIP	1.5K	5%	1/16W
R639	1-218-973-11	METAL CHIP	47K	5%	1/16W
R640	1-218-961-11	METAL CHIP	4.7K	5%	1/16W
R641	1-218-967-11	METAL CHIP	15K	5%	1/16W
R642	1-218-970-11	METAL CHIP	27K	5%	1/16W
R643	1-216-864-11	SHORT CHIP	0		
R644	1-208-931-11	METAL CHIP	68K	0.5%	1/16W
R645	1-218-973-11	METAL CHIP	47K	5%	1/16W
R646	1-218-989-11	METAL CHIP	1M	5%	1/16W
R647	1-218-973-11	METAL CHIP	47K	5%	1/16W
R648	1-218-973-11	METAL CHIP	47K	5%	1/16W
R649	1-218-970-11	METAL CHIP	27K	5%	1/16W
R650	1-218-969-11	METAL CHIP	22K	5%	1/16W
R651	1-218-979-11	METAL CHIP	150K	5%	1/16W
R652	1-218-958-11	METAL CHIP	2.7K	5%	1/16W
R653	1-250-515-11	METAL CHIP	6.8K	1%	1/16W
R654	1-218-958-11	METAL CHIP	2.7K	5%	1/16W
R655	1-218-965-11	METAL CHIP	10K	5%	1/16W
R656	1-218-959-11	METAL CHIP	3.3K	5%	1/16W
R658	1-218-989-11	METAL CHIP	1M	5%	1/16W
R659	1-218-973-11	METAL CHIP	47K	5%	1/16W
R661	1-218-941-81	METAL CHIP	100	5%	1/16W
R662	1-218-974-11	METAL CHIP	56K	5%	1/16W
R663	1-218-987-11	METAL CHIP	680K	5%	1/16W
R665	1-218-989-11	METAL CHIP	1M	5%	1/16W
R666	1-218-973-11	METAL CHIP	47K	5%	1/16W
R669	1-218-987-11	METAL CHIP	680K	5%	1/16W
R671	1-218-974-11	METAL CHIP	56K	5%	1/16W
R674	1-218-941-81	METAL CHIP	100	5%	1/16W
R677	1-218-990-81	SHORT CHIP	0		
R681	1-218-989-11	METAL CHIP	1M	5%	1/16W
R682	1-218-973-11	METAL CHIP	47K	5%	1/16W
R684	1-218-973-11	METAL CHIP	47K	5%	1/16W
R685	1-218-978-11	METAL CHIP	120K	5%	1/16W
R686	1-218-978-11	METAL CHIP	120K	5%	1/16W
R687	1-218-933-11	METAL CHIP	22	5%	1/16W
R688	1-218-929-11	METAL CHIP	10	5%	1/16W
R689	1-218-979-11	METAL CHIP	150K	5%	1/16W
R690	1-218-929-11	METAL CHIP	10	5%	1/16W
R691	1-218-929-11	METAL CHIP	10	5%	1/16W
R692	1-218-969-11	METAL CHIP	22K	5%	1/16W
R693	1-218-989-11	METAL CHIP	1M	5%	1/16W
R694	1-218-973-11	METAL CHIP	47K	5%	1/16W
R696	1-218-973-11	METAL CHIP	47K	5%	1/16W
R697	1-218-973-11	METAL CHIP	47K	5%	1/16W
R698	1-218-973-11	METAL CHIP	47K	5%	1/16W
R700	1-218-969-11	METAL CHIP	22K	5%	1/16W
R708	1-218-937-11	METAL CHIP	47	5%	1/16W
R709	1-218-937-11	METAL CHIP	47	5%	1/16W
R711	1-218-953-11	METAL CHIP	1K	5%	1/16W
R716	1-218-953-11	METAL CHIP	1K	5%	1/16W
R718	1-218-990-81	SHORT CHIP	0		

Ref. No.	Part No.	Description			Remark
R719	1-218-929-11	METAL CHIP	10	5%	1/16W
R720	1-218-929-11	METAL CHIP	10	5%	1/16W
R722	1-218-929-11	METAL CHIP	10	5%	1/16W
R723	1-218-929-11	METAL CHIP	10	5%	1/16W
R733	1-216-864-11	SHORT CHIP	0		
R747	1-216-864-11	SHORT CHIP	0		
R750	1-218-941-81	METAL CHIP	100	5%	1/16W
R751	1-218-941-81	METAL CHIP	100	5%	1/16W
R752	1-218-941-81	METAL CHIP	100	5%	1/16W
R753	1-218-941-81	METAL CHIP	100	5%	1/16W
R756	1-250-515-11	METAL CHIP	6.8K	1%	1/16W
R760	1-218-929-11	METAL CHIP	10	5%	1/16W
R761	1-218-929-11	METAL CHIP	10	5%	1/16W
R762	1-218-929-11	METAL CHIP	10	5%	1/16W
R763	1-216-864-11	SHORT CHIP	0		
R780	1-216-864-11	SHORT CHIP	0		
R785	1-218-990-81	SHORT CHIP	0		
R790	1-218-990-81	SHORT CHIP	0		
R791	1-218-990-81	SHORT CHIP	0		
R792	1-216-864-11	SHORT CHIP	0		
R794	1-216-864-11	SHORT CHIP	0		
R817	1-218-929-11	METAL CHIP	10	5%	1/16W
R820	1-218-929-11	METAL CHIP	10	5%	1/16W
R826	1-218-949-11	METAL CHIP	470	5%	1/16W
R827	1-216-833-11	METAL CHIP	10K	5%	1/10W
R829	1-218-949-11	METAL CHIP	470	5%	1/16W
R830	1-216-833-11	METAL CHIP	10K	5%	1/10W
R857	1-216-864-11	SHORT CHIP	0		
R859	1-216-864-11	SHORT CHIP	0		
R905	1-218-990-81	SHORT CHIP	0		
R911	1-218-985-11	METAL CHIP	470K	5%	1/16W
R912	1-218-985-11	METAL CHIP	470K	5%	1/16W
R913	1-218-975-11	METAL CHIP	68K	5%	1/16W
R914	1-218-975-11	METAL CHIP	68K	5%	1/16W
R915	1-208-699-11	METAL CHIP	4.7K	0.5%	1/16W
R916	1-208-699-11	METAL CHIP	4.7K	0.5%	1/16W
R935	1-250-468-11	METAL CHIP	75	1%	1/16W
R937	1-218-941-81	METAL CHIP	100	5%	1/16W
R938	1-216-864-11	SHORT CHIP	0		
R939	1-218-965-11	METAL CHIP	10K	5%	1/16W
R940	1-218-941-81	METAL CHIP	100	5%	1/16W
R943	1-218-933-11	METAL CHIP	22	5%	1/16W
R944	1-218-933-11	METAL CHIP	22	5%	1/16W
R948	1-218-990-81	SHORT CHIP	0		
R963	1-218-929-11	METAL CHIP	10	5%	1/16W
R964	1-218-929-11	METAL CHIP	10	5%	1/16W
R965	1-218-941-81	METAL CHIP	100	5%	1/16W
R966	1-218-929-11	METAL CHIP	10	5%	1/16W
R967	1-218-990-81	SHORT CHIP	0		
R978	1-218-990-81	SHORT CHIP	0		
R982	1-218-990-81	SHORT CHIP	0		
R987	1-218-970-81	METAL CHIP	27K	5%	1/16W
R988	1-218-970-81	METAL CHIP	27K	5%	1/16W
R989	1-218-978-11	METAL CHIP	120K	5%	1/16W
R990	1-218-978-11	METAL CHIP	120K	5%	1/16W
R991	1-218-978-11	METAL CHIP	120K	5%	1/16W
R992	1-218-978-11	METAL CHIP	120K	5%	1/16W
R993	1-218-978-11	METAL CHIP	120K	5%	1/16W
R994	1-218-978-11	METAL CHIP	120K	5%	1/16W
R997	1-216-295-91	SHORT CHIP	0		

Ref. No.	Part No.	Description	Remark
R998	1-216-295-91	SHORT CHIP 0	
		< COMPOSITION CIRCUIT BLOCK >	
RB301	1-234-370-21	RES, NETWORK 22 (1005X4)	
RB302	1-234-370-21	RES, NETWORK 22 (1005X4)	
RB303	1-234-370-21	RES, NETWORK 22 (1005X4)	
RB304	1-234-370-21	RES, NETWORK 22 (1005X4)	
RB305	1-234-370-21	RES, NETWORK 22 (1005X4)	
RB306	1-234-370-21	RES, NETWORK 22 (1005X4)	
RB307	1-234-370-21	RES, NETWORK 22 (1005X4)	
RB308	1-234-370-21	RES, NETWORK 22 (1005X4)	
RB309	1-234-370-21	RES, NETWORK 22 (1005X4)	
		< THERMISTOR >	
TH571	1-804-949-11	THERMISTOR, NTC (SMD)	
		< VIBRATOR >	
X101	1-814-273-11	QUARTZ CRYSTAL UNITS (32.768 kHz)	
X102	1-814-767-11	QUARTZ CRYSTAL UNITS (13.333MHz)	
X103	1-814-466-11	QUARTZ CRYSTAL UNITS (12.288MHz)	
X104	1-814-356-11	QUARTZ CRYSTAL UNIT (48MHz)	
X301	1-814-023-11	QUARTS CRYSTAL UNIT (27MHz)	
X451	1-814-365-11	QUARTZ CRYSTAL UNITS (12MHz)	
X600	1-814-365-11	QUARTZ CRYSTAL UNITS (12MHz)	

****

MS-476 BOARD
****

When the MS-476 board is defective, exchange the entire LOADING ASSY (T).

****

STR BOARD
****

Ref. No.	Part No.	Description	Remark
		< CAPACITOR >	
C1003	1-162-927-11	CERAMIC CHIP 100PF 5% 50V	
C1004	1-127-715-11	CERAMIC CHIP 0.22uF 10% 16V	
C1007	1-118-345-11	CERAMIC CHIP 0.01uF 10% 25V	
C1008	1-118-345-11	CERAMIC CHIP 0.01uF 10% 25V (SHAKEX3/SHAKEX7)	
C1011	1-118-345-11	CERAMIC CHIP 0.01uF 10% 25V (SHAKEX3/SHAKEX7)	
C1014	1-118-347-11	CERAMIC CHIP 0.1uF 10% 25V	
* C1016	1-116-720-11	CERAMIC CHIP 10uF 20% 6.3V	
C1017	1-118-345-11	CERAMIC CHIP 0.01uF 10% 25V	
C1022	1-118-347-11	CERAMIC CHIP 0.1uF 10% 25V	
* C1024	1-116-720-11	CERAMIC CHIP 10uF 20% 6.3V	
C1025	1-118-345-11	CERAMIC CHIP 0.01uF 10% 25V	
C1028	1-118-290-11	CERAMIC CHIP 0.001uF 10% 50V	
C1030	1-118-345-11	CERAMIC CHIP 0.01uF 10% 25V	
C1031	1-118-345-11	CERAMIC CHIP 0.01uF 10% 25V	
C1032	1-118-345-11	CERAMIC CHIP 0.01uF 10% 25V	
C1033	1-118-345-11	CERAMIC CHIP 0.01uF 10% 25V	
C1034	1-118-345-11	CERAMIC CHIP 0.01uF 10% 25V	
C1035	1-118-345-11	CERAMIC CHIP 0.01uF 10% 25V	
C1036	1-118-345-11	CERAMIC CHIP 0.01uF 10% 25V	
C1037	1-118-345-11	CERAMIC CHIP 0.01uF 10% 25V	
C1038	1-100-055-21	CERAMIC CHIP 22uF 20% 16V	
C1039	1-100-055-21	CERAMIC CHIP 22uF 20% 16V	
		< CONNECTOR >	
CN1001	1-819-866-11	USB CONNECTOR (A) (2 5V ⎓ 1A REC/PLAY)	
CN1002	1-819-866-11	USB CONNECTOR (A) (1 5V ⎓ 1A PLAY)	
CN1008	1-779-544-21	CONNECTOR, FFC (LIF (NON-ZIF)) 7P	
CN1011	1-779-548-21	CONNECTOR, FFC (LIF (NON-ZIF)) 11P	
* CN1222	1-564-724-11	PIN, CONNECTOR (SMALL TYPE) 8P	
CN2103	1-779-289-11	CONNECTOR, FFC (LIF (NON-ZIF)) 21P	
		< DIODE >	
D015	6-502-970-01	DI DZ2J068M0L	
D016	6-502-970-01	DI DZ2J068M0L	
D018	6-500-400-01	DIODE BAV99-215	
D019	6-500-400-01	DIODE BAV99-215	
D020	6-500-400-01	DIODE BAV99-215	
D1001	6-504-215-01	DI HL-364V620MZ-T	
D1006	6-504-213-01	DI HL-364B460MZ-T	
D2007	6-502-970-01	DI DZ2J068M0L	
D2011	6-500-400-01	DIODE BAV99-215	
D2012	6-500-400-01	DIODE BAV99-215	
D2013	6-500-400-01	DIODE BAV99-215	
D2014	6-502-970-01	DI DZ2J068M0L	
D2208	6-502-970-01	DI DZ2J068M0L	
D2209	6-502-970-01	DI DZ2J068M0L	
D2210	6-504-214-01	DI HL-364W650MZ-T (SHAKEX3/SHAKEX7)	
D2211	6-504-214-01	DI HL-364W650MZ-T (SHAKEX3/SHAKEX7)	
D2212	6-504-214-01	DI HL-364W650MZ-T (SHAKEX3/SHAKEX7)	
D2213	6-504-214-01	DI HL-364W650MZ-T (SHAKEX3/SHAKEX7)	
		< ROTARY ENCODER >	
EN001	1-493-008-11	ENCODER, ROTARY (VOLUME/MULTI CONTROL)	
		< IC >	
IC1001	6-719-142-01	IC TC62D723FNG	
		< JUMPER >	
JC001	1-216-295-91	SHORT CHIP 0	
JC002	1-216-295-91	SHORT CHIP 0	
JC003	1-216-295-91	SHORT CHIP 0	
JC004	1-216-295-91	SHORT CHIP 0	
JC005	1-216-295-91	SHORT CHIP 0	
JC006	1-216-295-91	SHORT CHIP 0	
		< JUMPER RESISTOR >	
JR0011	1-216-296-11	SHORT CHIP 0	
JR0012	1-216-296-11	SHORT CHIP 0	
JR0013	1-216-296-11	SHORT CHIP 0	
JR0014	1-216-296-11	SHORT CHIP 0	
JR0015	1-216-296-11	SHORT CHIP 0	
JR0016	1-216-296-11	SHORT CHIP 0	
JR0017	1-216-296-11	SHORT CHIP 0	
JR0018	1-216-296-11	SHORT CHIP 0	
JR00110	1-216-296-11	SHORT CHIP 0	
JR00111	1-216-296-11	SHORT CHIP 0	
JR00112	1-216-296-11	SHORT CHIP 0	
JR00113	1-216-296-11	SHORT CHIP 0	
JR00114	1-216-296-11	SHORT CHIP 0	
JR00115	1-216-296-11	SHORT CHIP 0	
JR00116	1-216-296-11	SHORT CHIP 0	

Ref. No.	Part No.	Description			Remark
JR00117	1-216-864-11	SHORT CHIP	0		
JR00118	1-216-296-11	SHORT CHIP	0		
JR00122	1-216-296-11	SHORT CHIP	0		
JR00124	1-216-296-11	SHORT CHIP	0		
JR00125	1-216-296-11	SHORT CHIP	0		
JR00127	1-216-296-11	SHORT CHIP	0		
JR00128	1-216-296-11	SHORT CHIP	0		
JR00129	1-216-296-11	SHORT CHIP	0		
JR00130	1-216-296-11	SHORT CHIP	0		
JR00131	1-216-296-11	SHORT CHIP	0		
JR00132	1-216-296-11	SHORT CHIP	0		
JR00133	1-216-296-11	SHORT CHIP	0		
JR00134	1-216-296-11	SHORT CHIP	0		
JR00135	1-216-296-11	SHORT CHIP	0		
JR00136	1-216-296-11	SHORT CHIP	0		
JR00137	1-216-296-11	SHORT CHIP	0		
JR00139	1-216-296-11	SHORT CHIP	0		
JR00140	1-216-296-11	SHORT CHIP	0		
JR00141	1-216-296-11	SHORT CHIP	0		
JR00142	1-216-296-11	SHORT CHIP	0		
JR00144	1-216-296-11	SHORT CHIP	0		
JR00145	1-216-296-11	SHORT CHIP	0		
JR00148	1-216-296-11	SHORT CHIP	0		
JR00154	1-216-296-11	SHORT CHIP	0		
JR00155	1-216-296-11	SHORT CHIP	0		
JR00160	1-216-296-11	SHORT CHIP	0		
JR00163	1-216-296-11	SHORT CHIP	0		
JR00165	1-216-296-11	SHORT CHIP	0		
JR00166	1-216-296-11	SHORT CHIP	0		
JR00171	1-216-296-11	SHORT CHIP	0		
JR00172	1-216-296-11	SHORT CHIP	0		
JR00173	1-216-296-11	SHORT CHIP	0		
JR00174	1-216-296-11	SHORT CHIP	0		
		< RESISTOR >			
R1001	1-216-809-11	METAL CHIP	100	5%	1/10W
R1003	1-216-809-11	METAL CHIP	100	5%	1/10W
R1010	1-216-820-11	METAL CHIP	820	5%	1/10W
R1011	1-216-833-11	METAL CHIP	10K	5%	1/10W
R1012	1-216-809-11	METAL CHIP	100	5%	1/10W
R1013	1-216-809-11	METAL CHIP	100	5%	1/10W
R1015	1-216-801-11	METAL CHIP	22	5%	1/10W
R1020	1-216-801-11	METAL CHIP	22	5%	1/10W
R1021	1-216-801-11	METAL CHIP	22	5%	1/10W
				(SHAKEX3/SHAKEX7)	
R1022	1-216-801-11	METAL CHIP	22	5%	1/10W
				(SHAKEX3/SHAKEX7)	
R1023	1-216-801-11	METAL CHIP	22	5%	1/10W
R1024	1-216-801-11	METAL CHIP	22	5%	1/10W
R1025	1-216-801-11	METAL CHIP	22	5%	1/10W
R1026	1-216-801-11	METAL CHIP	22	5%	1/10W
R1027	1-216-801-11	METAL CHIP	22	5%	1/10W
R1028	1-216-801-11	METAL CHIP	22	5%	1/10W
R1029	1-216-801-11	METAL CHIP	22	5%	1/10W
R1036	1-216-819-11	METAL CHIP	680	5%	1/10W
R1037	1-218-867-11	METAL CHIP	6.8K	0.5%	1/10W
R1038	1-216-829-11	METAL CHIP	4.7K	5%	1/10W
R1039	1-216-827-11	METAL CHIP	3.3K	5%	1/10W
R1040	1-216-825-11	METAL CHIP	2.2K	5%	1/10W
R1041	1-216-823-11	METAL CHIP	1.5K	5%	1/10W
R1042	1-216-823-11	METAL CHIP	1.5K	5%	1/10W
R1043	1-216-821-11	METAL CHIP	1K	5%	1/10W
R1044	1-216-819-11	METAL CHIP	680	5%	1/10W
R1045	1-216-833-11	METAL CHIP	10K	5%	1/10W
R1046	1-216-835-11	METAL CHIP	15K	5%	1/10W
R1047	1-216-837-11	METAL CHIP	22K	5%	1/10W
R1048	1-216-833-11	METAL CHIP	10K	5%	1/10W
R1049	1-218-867-11	METAL CHIP	6.8K	0.5%	1/10W
R1068	1-216-821-11	METAL CHIP	1K	5%	1/10W
R1069	1-216-823-11	METAL CHIP	1.5K	5%	1/10W
R1070	1-216-823-11	METAL CHIP	1.5K	5%	1/10W
R1071	1-216-825-11	METAL CHIP	2.2K	5%	1/10W
R1072	1-216-827-11	METAL CHIP	3.3K	5%	1/10W
R1073	1-216-829-11	METAL CHIP	4.7K	5%	1/10W
R1076	1-216-835-11	METAL CHIP	15K	5%	1/10W
R1080	1-216-864-11	SHORT CHIP	0		
		< VARISTOR >			
RV001	1-227-919-11	RES, VAR, CARBON 50K (MIC LEVEL MIN MAX)			
		< SWITCH >			
S1001	1-762-875-21	SWITCH, TACTILE (DJ EFFECT DJ OFF)			
S1002	1-762-875-21	SWITCH, TACTILE (VOCAL FADER)			
S1003	1-762-875-21	SWITCH, TACTILE (S2 🗀 +)			
S1004	1-762-875-21	SWITCH, TACTILE (S1 🗀 –)			
S1005	1-762-875-21	SWITCH, TACTILE (⏏)			
S1006	1-762-875-21	SWITCH, TACTILE (S4 TUNING + ▶▶I)			
S1007	1-762-875-21	SWITCH, TACTILE (S3 TUNING – I◀◀)			
S1008	1-762-875-21	SWITCH, TACTILE (ENTER)			
S1009	1-762-875-21	SWITCH, TACTILE (SOUND FIELD)			
S1014	1-762-875-21	SWITCH, TACTILE (I/⏻)			
S1015	1-762-875-21	SWITCH, TACTILE (MIC ECHO)			
S1016	1-762-875-21	SWITCH, TACTILE (REC TO USB)			
S1017	1-762-875-21	SWITCH, TACTILE (BASS BAZUCA)			
S1018	1-762-875-21	SWITCH, TACTILE (➖ PAIRING BLUETOOTH)			
S1019	1-762-875-21	SWITCH, TACTILE (LIGHT MODE)			
S1020	1-762-875-21	SWITCH, TACTILE (SPEAKER LIGHT)			
S1021	1-762-875-21	SWITCH, TACTILE (■)			
S1022	1-762-875-21	SWITCH, TACTILE (▶)			
S1025	1-762-875-21	SWITCH, TACTILE (PARTY CHAIN)			
S1026	1-762-875-21	SWITCH, TACTILE (DJ EFFECT FLANGER)			
S1027	1-762-875-21	SWITCH, TACTILE (FUNCTION)			
S1028	1-762-875-21	SWITCH, TACTILE (DJ EFFECT ISOLATOR)			
S1029	1-762-875-21	SWITCH, TACTILE (FOOTBALL)			
S1030	1-762-875-21	SWITCH, TACTILE (DJ EFFECT SAMPLER)			

****

MISCELLANEOUS
****

⚠ 51	1-855-340-11	DC FAN
101	1-828-372-12	WIRE (FLAT TYPE) (21 CORE)
151	1-828-701-51	WIRE (FLAT TYPE) (10 CORE)
152	1-492-699-11	BLUETOOTH MODULE
203	1-457-369-12	CORE, FERRITE (EXCEPT LA9, TH, AR, E12)
⚠ 204	1-474-607-11	SWITCHING REGULATOR (SHAKEX7)
⚠ 204	1-474-608-21	REGULATOR, SWITCHING (SSN-152AD) (SHAKEX1/SHAKEX3)
⚠ 205	1-844-220-11	AC INLET
254	1-828-370-21	WIRE (FLAT TYPE) (21 CORE)
255	1-828-319-21	WIRE (FLAT TYPE) (11 CORE)
256	1-828-297-21	WIRE (FLAT TYPE) (7 CORE)

Note: If wires (flat type) is replaced, install it after bending it in the same form as that before replacement.

Ref. No.	Part No.	Description	Remark
257	1-846-749-11	WIRE (FLAT TYPE) (6 CORE)	
258	8-989-602-00	RC-S730 (WW)	
301	A-1896-391-B	LOADING COMPLETE ASSY (T) (including MS-476 board)	
⚠ 304	A-2046-956-A	SERVICE, OPTICAL DEVICE (7G)	
305	1-828-293-12	WIRE (FLAT TYPE) (5 CORE)	
306	1-846-951-11	CABLE, FLEXIBLE FLAT (24 CORE)	

Note: If wire (flat type) and cable, flexible flat is replaced, install it after bending it in the same form as that before replacement.

REVISION HISTORY

Ver.	Date	Description of Revision
1.0	2015.01	New
1.1	2015.04	Addition of HCD-SHAKEX1 model. Addition of African, Argentina, Malaysia, Russian, Saudi Arabia and Thai models (HCD-SHAKEX3). Addition of 220 – 240 V AC area in E model, African, Saudi Arabia, Argentina, Malaysia and Thai models (HCD-SHAKEX7). Add C1003 in STR board. Add illustration of GND wire in page 10, 70 and 75. Add Servicing Notes for IC105 and IC301 in MOTHERBOARD board (Service code changed). Change description of CN302 in MOTHERBOARD board. Change description of IC1008 and IC1010 in 4CH DAMP board. Change of 4CH DAMP board (suffix 12). Change P/N of R002 in MOTHERBOARD board. Change P/N of R367 in MOTHERBOARD board (HCD-SHAKEX3). Change P/N and description of R367, R380 and FB117 in MOTHERBOARD board (HCD-SHAKEX7). Change P/N of REGULATOR, SWITCHING (SSN-152AD) (HCD-SHAKEX1/SHAKEX3). Change P/N and description of C2221 in MIC board (Service code changed). Change P/N and description of CLAMP in page 74 and 93 (Service code changed). Change P/N and description of R386 in MOTHERBOARD board. Delete of “MODEL & DEST WRITE MODE” in page 18. Delete of L602 in MOTHERBOARD board. Delete of R208 in MOTHERBOARD board.
1.2	2015.05	Change description of Ref. No. 53 in page 71.
1.3	2015.07	Addition of Malaysia and Russian models (HCD-SHAKEX1). Addition of Australian model (HCD-SHAKEX3). Add CUSHION, SEAL on 4CH DAMP board in page 11 and 71 (HCD-SHAKEX1/SHAKEX3). Change illustration of IC902 in page 62. Change location of SHEET, THERMAL in page 11 and 71 (HCD-SHAKEX1/SHAKEX3). Change pin name of IC1008, IC1009, IC1010, IC102 and IC103 in page 57. Change pin name of IC106, IC302 and IC306 in page 58. Change pin name of IC452 in page 59. Change pin name of IC453, IC602 and IC605 in page 60. Change pin name of IC604 in page 61. Change pin name of IC902, IC913 and IC914 in page 62. Change of 4CH DAMP board (suffix 13). Change P/N and description of C1238 and C1239 in 4CH DAMP board. Change P/N and description of CN105 in MOTHERBOARD board. Change P/N and description of D001, D002, D003, D004, D005, D006 and D007 in LED BAR board. Change P/N and description of D1001, D1006, D2210, D2211, D2212 and D2213 in STR board.

Ver.	Date	Description of Revision
		Change P/N of CN101 and CN601 in MOTHERBOARD board. Change P/N of L1001, L1003, L1006 and L1008 in 4CH DAMP board. Change P/N of Ref. No. 153 in page 73. Change P/N of Ref. No. 259 in page 75. Delete CN451 in MOTHERBOARD board for Electrical Part List section (Service code changed). Delete CORE, FERRITE for 220 – 240 V AC area in E model, Argentina, Latin- American and Thai models in page 74 and 93. Delete eight SCREW (+BVTP 3X8) in page 73. Delete illustration of LENS (L) and LENS (R) in page 73. Delete two SCREW (+BVTP2.6 (3CR)) in page 75. Delete two SCREW (+BVTP 3X8) in page 11, 15, 71, 74 and 75.

How to search for a contact point of signal lines or the like in DIAGRAMS SECTION

If a contact point of a BLOCK DIAGRAM, PRINTED WIRING BOARD or SCHEMATIC DIAGRAM is shown in a different page, use the PDF file search function to find one.

e.g.) If a contact point is shown as >001Z, follow the procedure below.

Procedure:

1. Press the [F] key while pressing the [Ctrl] key.
2. Input “>001Z” in the search box and press the [Enter] key.
3. The relevant part (page), where the contact point is shown, appears.

Note: If you still see the original page, press the [Enter] key again.