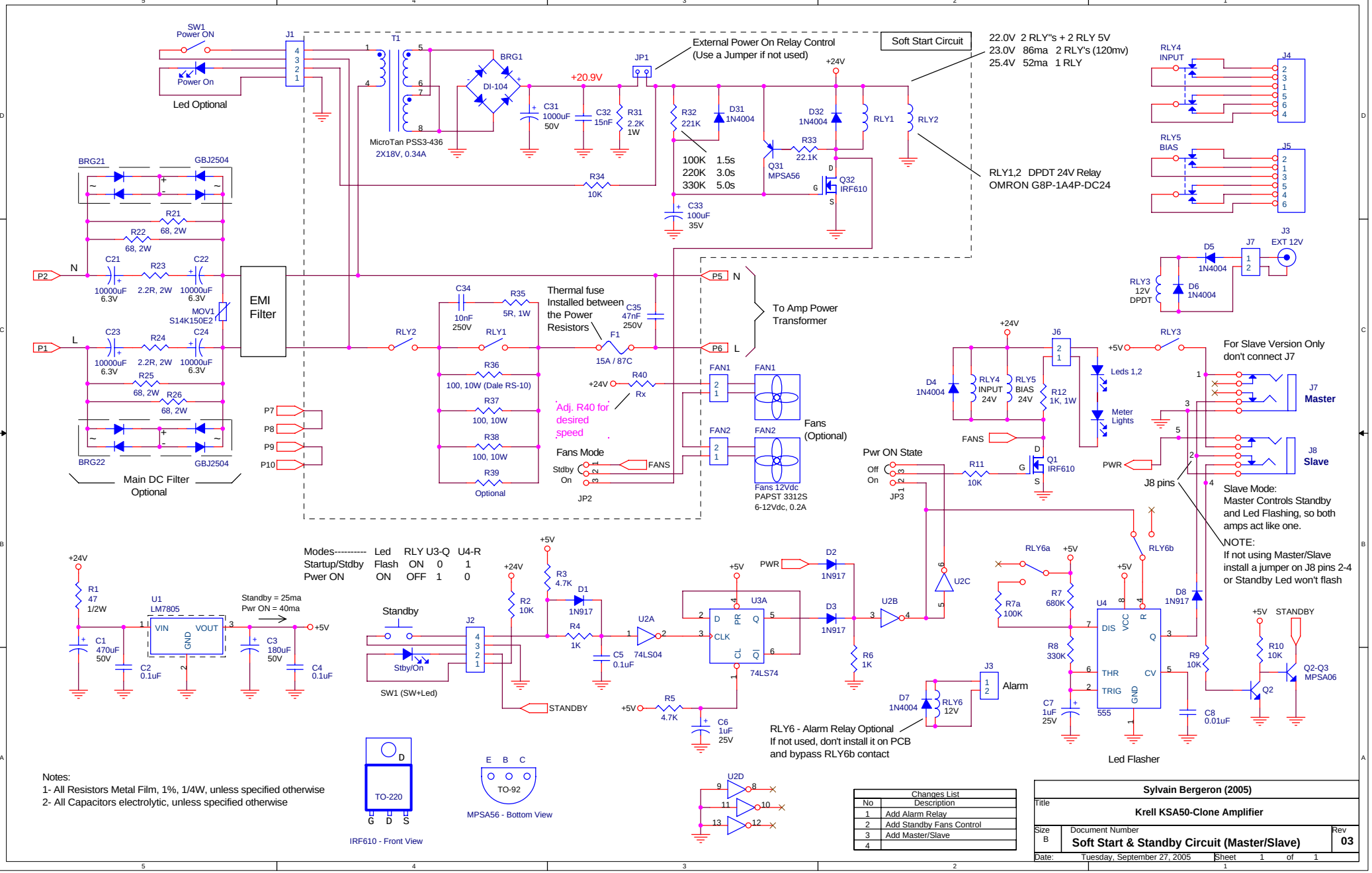

Notes:
1- All Resistors Metal Film, 1%, 1/4W, unless specified otherwise
2- All Capacitors electrolytic, unless specified otherwise

Changes List	
No	Description
1	Add Alarm Relay
2	Add Standby Fans Control
3	Add Master/Slave
4	

Sylvain Bergeron (2005)	
Title	Krell KSA50-Clone Amplifier
Size B	Document Number: Soft Start & Standby Circuit (Master/Slave) — Rev 03
Date: Tuesday, September 27, 2005	Sheet 1 of 1