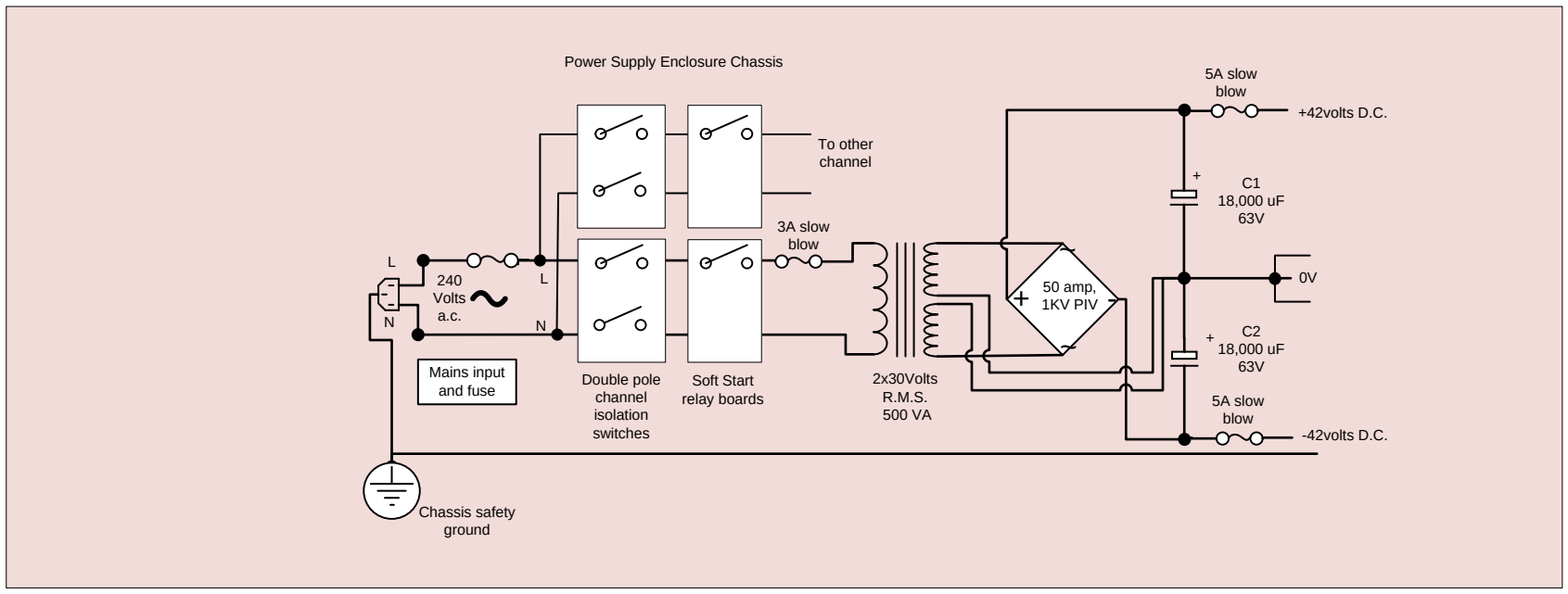
Power Supply Enclosure Chassis
5A slow blow
+42volts D.C.
To other channel
C1
18,000 uF
63V
3A slow blow
L
240 Volts a.c.
N
0V
50 amp, 1KV PIV
C2
18,000 uF
63V
Mains input and fuse
Double pole channel isolation switches
Soft Start relay boards
2x30Volts R.M.S. 500 VA
5A slow blow
-42volts D.C.
Chassis safety ground

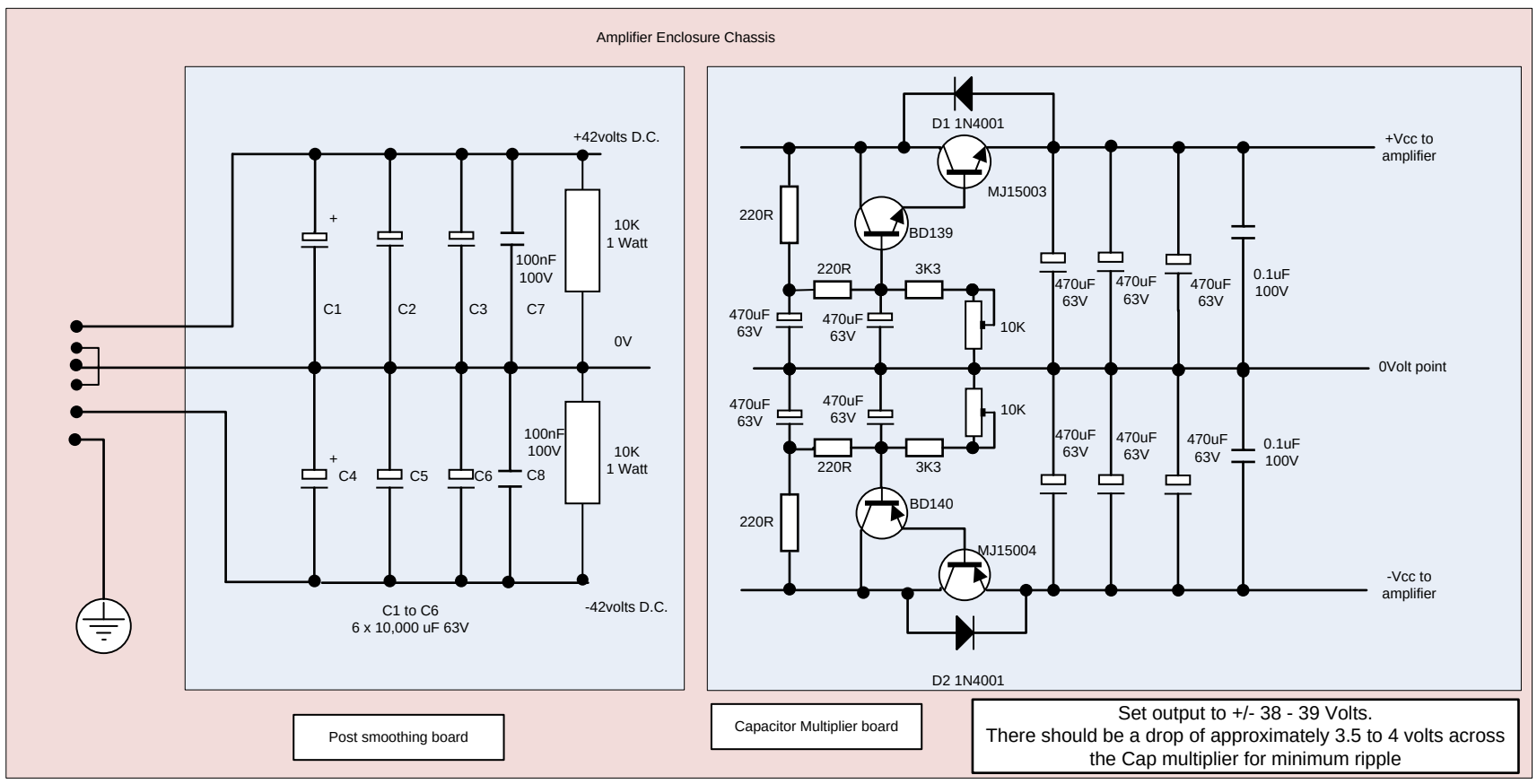
Amplifier Enclosure Chassis
+42volts D.C.
10K 1 Watt
100nF 100V
C1
C2
C3
C7
0V
C4
C5
C6
C8
C1 to C6
6 x 10,000 uF 63V
-42volts D.C.
Post smoothing board
D1 1N4001
+Vcc to amplifier
MJ15003
BD139
220R
3K3
10K
470uF 63V
0.1uF 100V
0Volt point
BD140
MJ15004
-Vcc to amplifier
D2 1N4001
Capacitor Multiplier board
Set output to +/- 38 - 39 Volts.
There should be a drop of approximately 3.5 to 4 volts across the Cap multiplier for minimum ripple