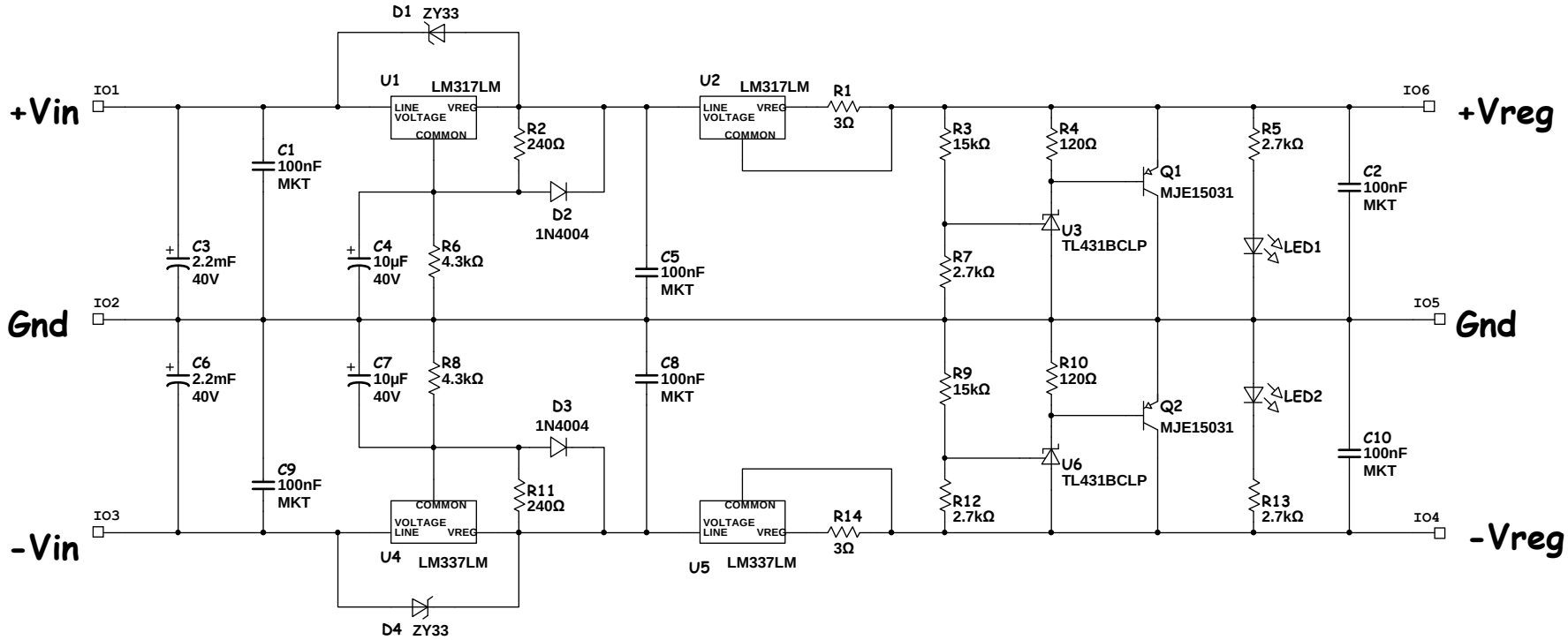

All resistors 0.5/0.6 W 1% metal film, except R1 and R14, as per current requirements

Vout	+/-15V	+/-22.5V	+/-25V	+/-30V
R3=R9=	15k	24k	27k	33k
R7=R12=	3k	3k	3k	3k
R2=R11=	240	240	240	240
R6=R8=	4k3	5k6	6k2	6k8
Vin=	2x22V	2x25V	2x27V	2x32V

Oli + DVV

2009

R1=R14= 1.25/(2 Iout) - calculate with required output current