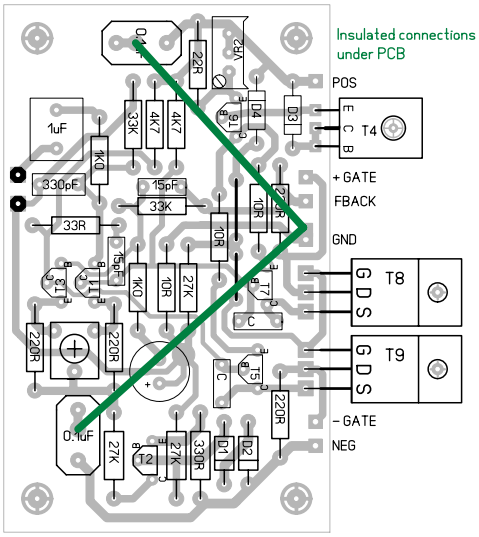

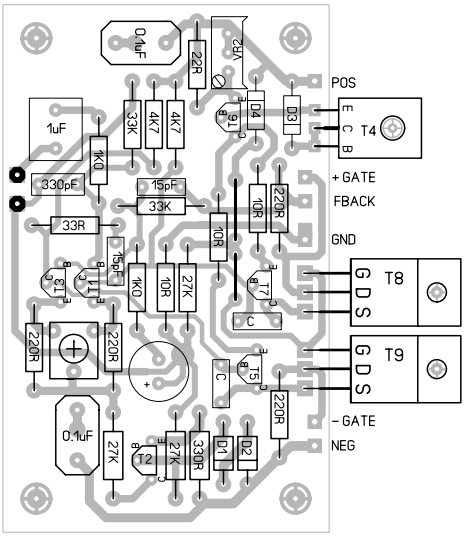
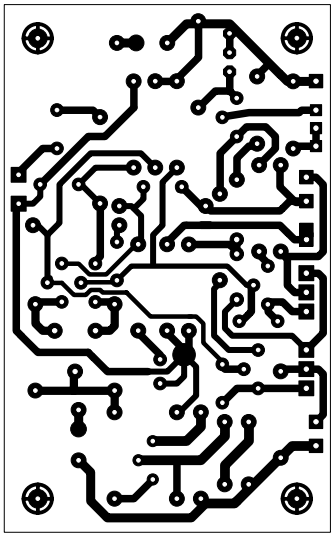
Layout without under PCB connections