SlewMaster 2P/5P OPS

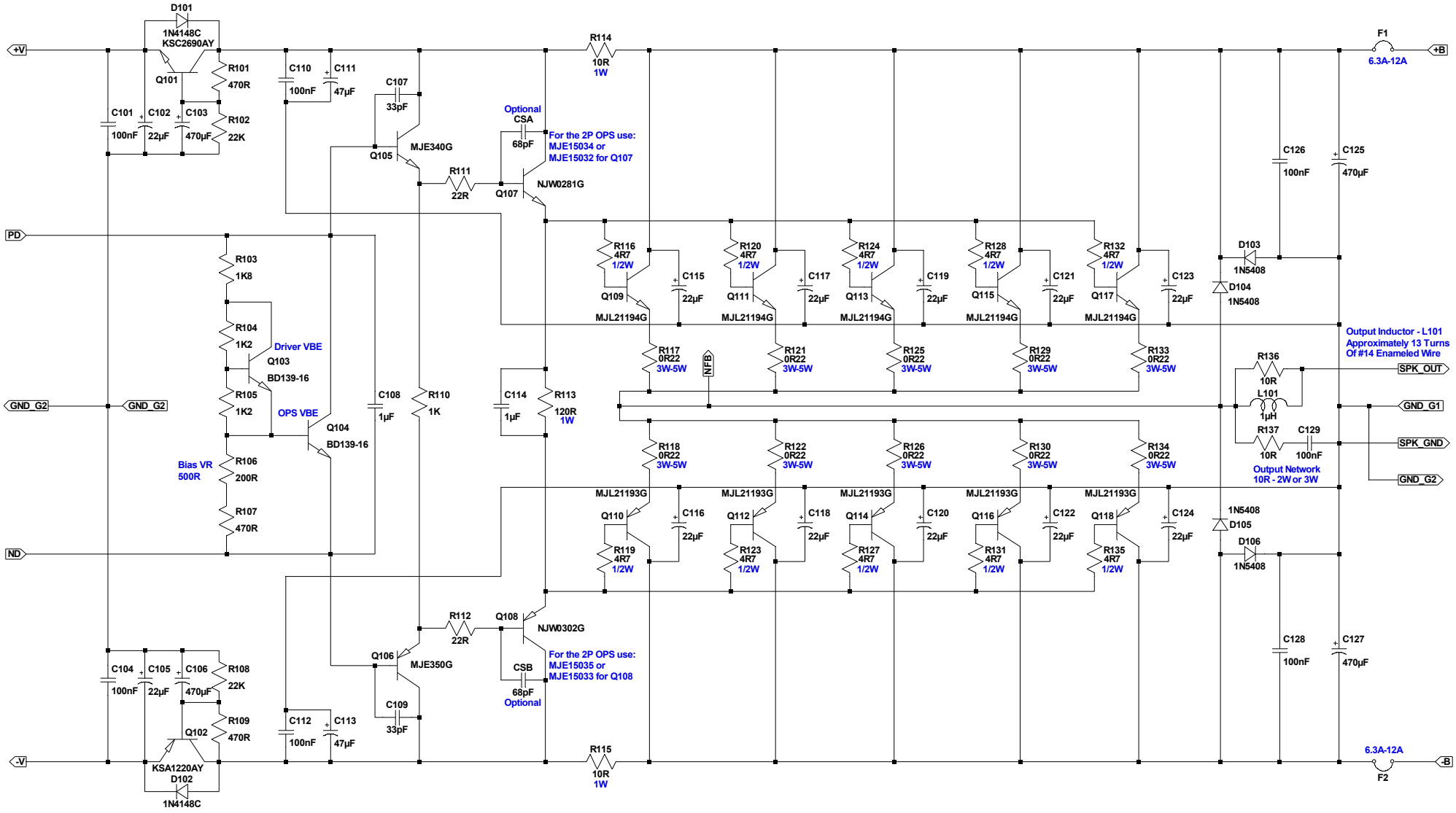

--- C:\Users\Jason\Documents\Projects\SlewMaster\SlewMonsterOPS.asc ---