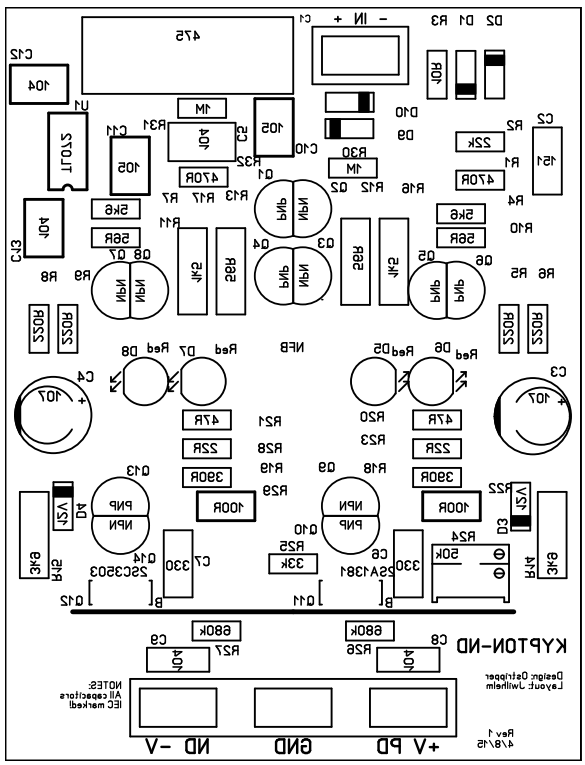
KYPTON-ND
Design: Ostripper
Layout: Jwilhelm
NOTES:
All capacitors
IEC marked!
Rev 1
4/8/15
+V PD
GND
ND -V