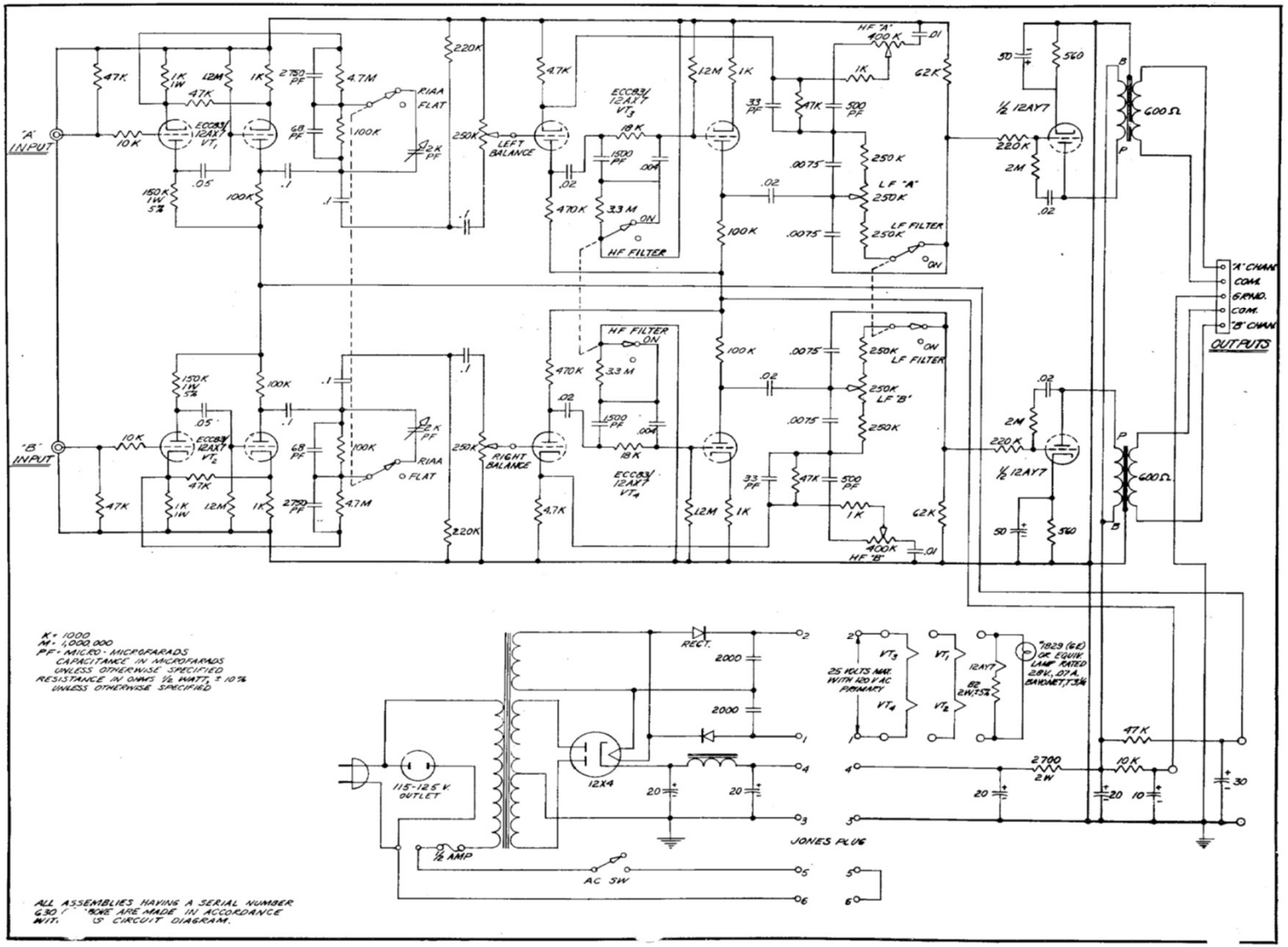
"A" INPUT
"B" INPUT
ECC83/12AX7 VT1
ECC83/12AX7 VT2
ECC83/12AX7 VT3
ECC83/12AX7 VT4
RIAA
FLAT
LEFT BALANCE
RIGHT BALANCE
HF FILTER
HF "A"
HF "B"
LF "A"
LF "B"
LF FILTER
½ 12AY7
600 Ω
"A" CHAN
COM.
GRND.
COM.
"B" CHAN
OUTPUTS
RECT.
115-125 V. OUTLET
12X4
½ AMP
AC SW
JONES PLUG
25 VOLTS MAX. WITH 120 V AC PRIMARY
"1829 (GE) OR EQUIV. LAMP RATED 28V., .07 A. BAYONET, T3¼
K = 1000
M = 1,000,000
PF = MICRO-MICROFARADS
CAPACITANCE IN MICROFARADS UNLESS OTHERWISE SPECIFIED
RESISTANCE IN OHMS ½ WATT, ± 10% UNLESS OTHERWISE SPECIFIED
ALL ASSEMBLIES HAVING A SERIAL NUMBER 630 [illegible] ABOVE ARE MADE IN ACCORDANCE WIT[illegible] S CIRCUIT DIAGRAM.