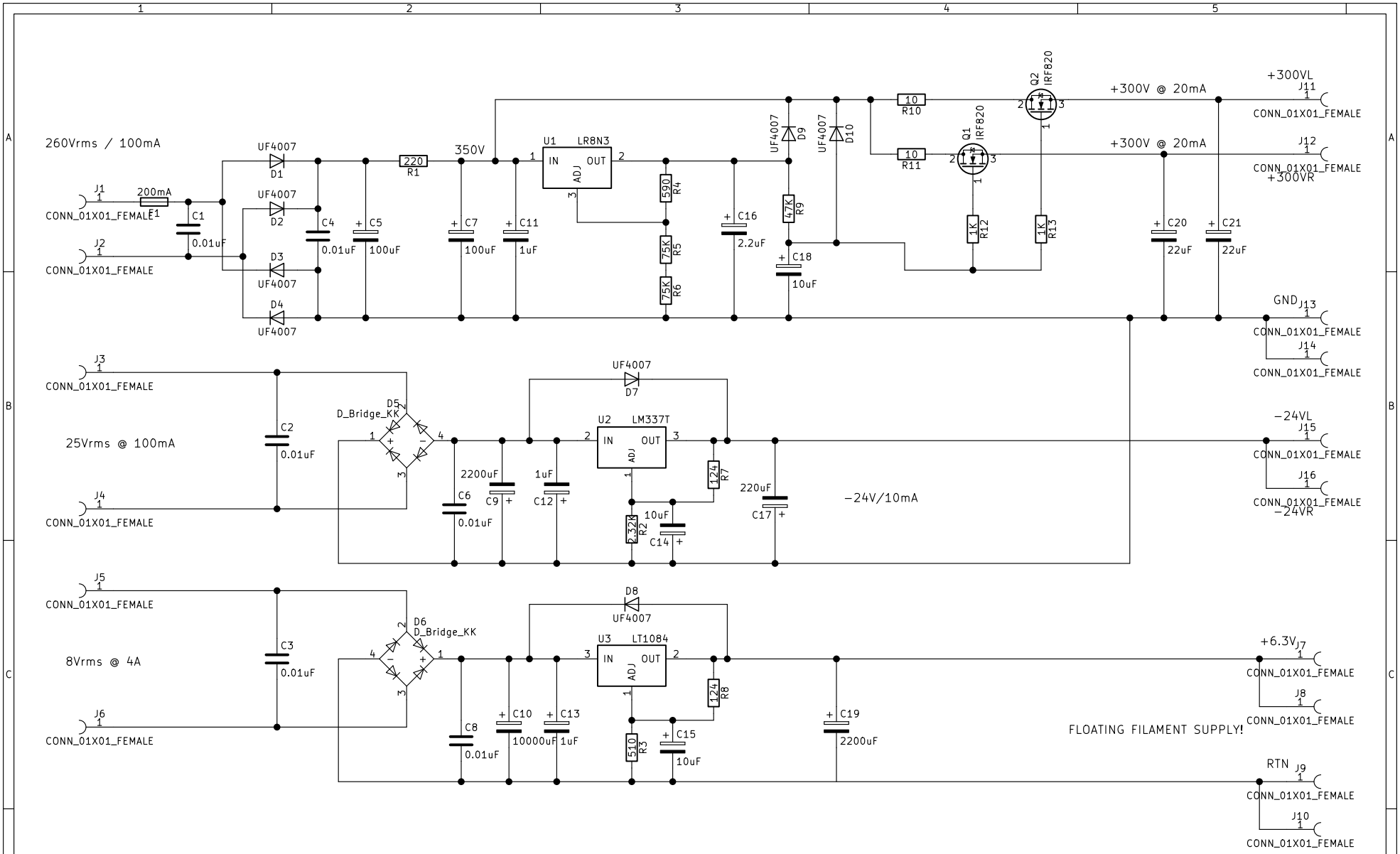

D6 needs to be a Schottky Bridge or discrete diodes if suitable device is not found.

Transformer should be approximately 60VA rating.

KTA AKA Kevin Kennedy

Sheet: /

File: SG_Phono_PSU.sch

Title: Strain Gauge Phono Solid State Supply

Size: A	Date: 2017-06-13	**Rev:**
KiCad E.D.A. kicad 4.0.6		Id: 1/1