Single Supply Application Circuit

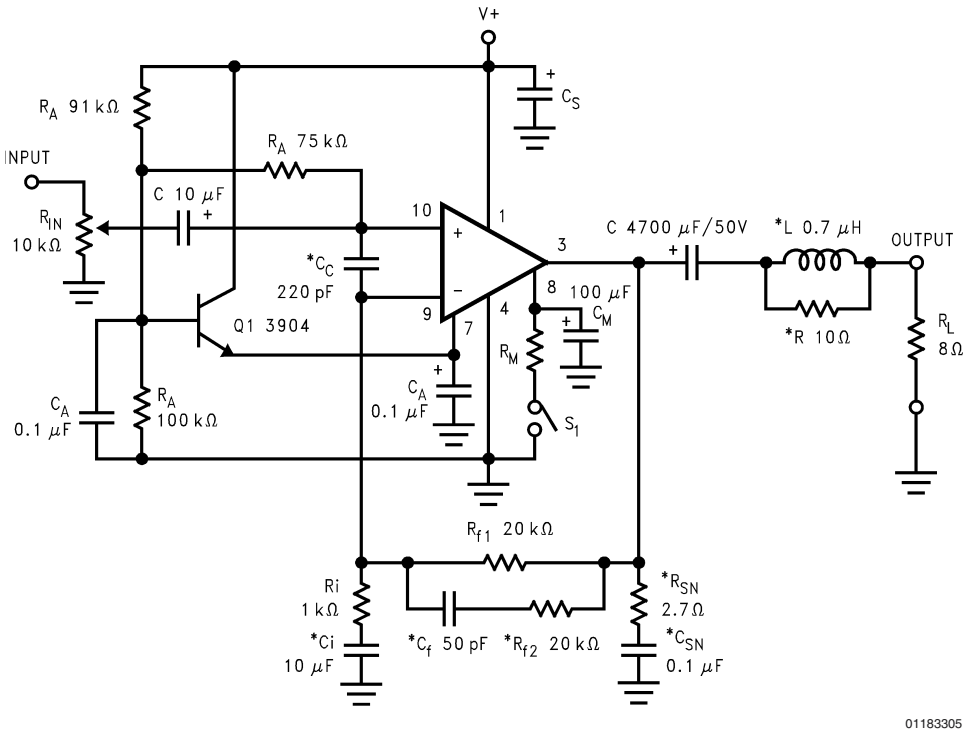

*Optional components dependent upon specific design requirements. Refer to the External Components Description section for a component functional description.

FIGURE 2. Typical Single Supply Audio Amplifier Application Circuit