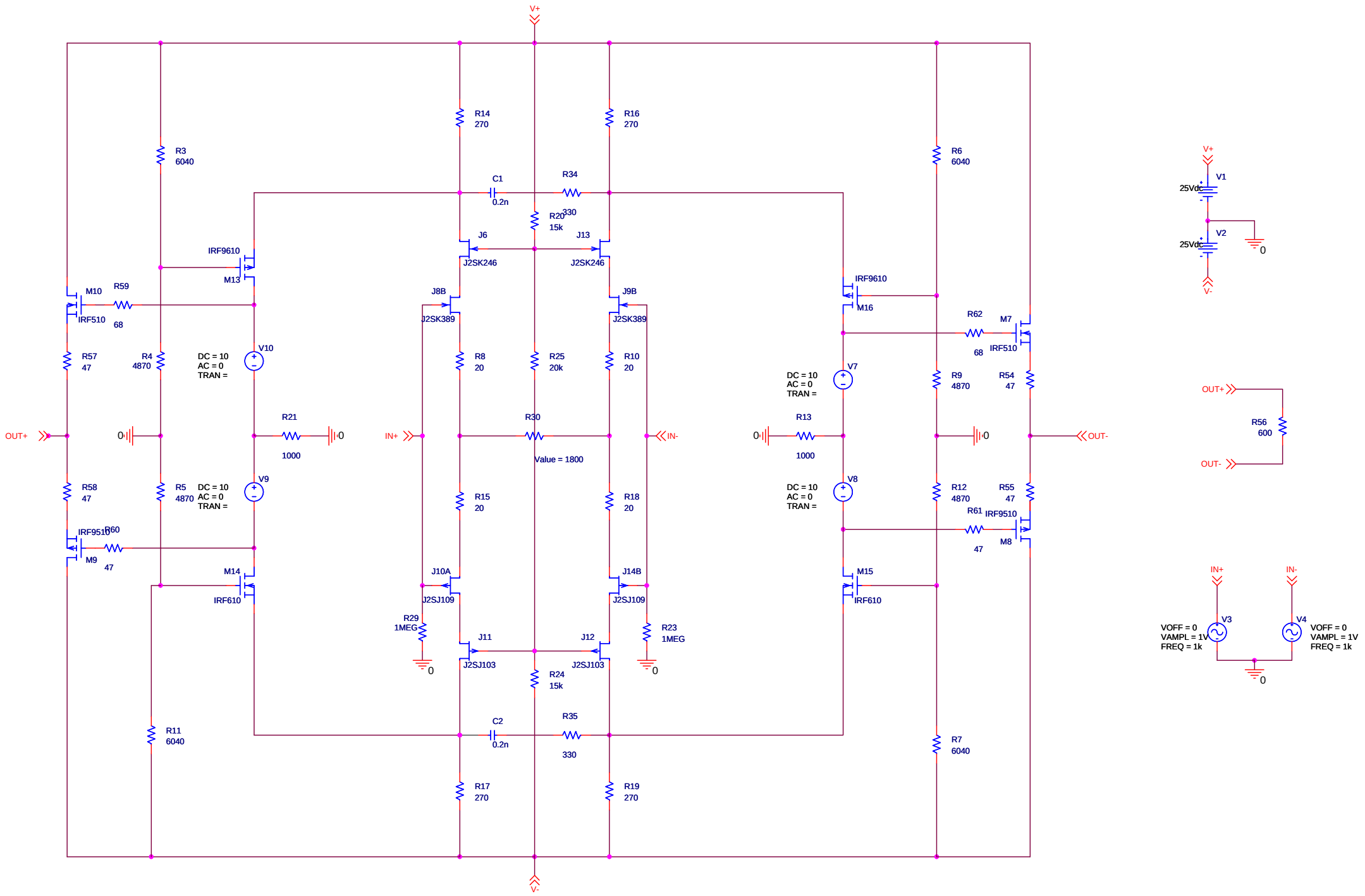
V+
V-
R14
270
R16
270
R3
6040
R6
6040
C1
0.2n
R34
330
R20
15k
J6
J2SK246
J13
J2SK246
IRF9610
M13
M10
IRF510
R59
68
J8B
J2SK389
J9B
J2SK389
IRF9610
M16
R62
68
M7
IRF510
R57
47
R4
4870
DC = 10
AC = 0
TRAN =
V10
R8
20
R25
20k
R10
20
V7
DC = 10
AC = 0
TRAN =
R9
4870
R54
47
OUT+
0
R21
1000
IN+
R30
Value = 1800
IN-
R13
1000
0
OUT-
R58
47
R5
4870
DC = 10
AC = 0
TRAN =
V9
R15
20
R18
20
V8
DC = 10
AC = 0
TRAN =
R12
4870
R55
47
IRF9510
R60
47
M9
R61
47
IRF9510
M8
M14
IRF610
J10A
J2SJ109
J14B
J2SJ109
M15
IRF610
R29
1MEG
J11
J2SJ103
J12
J2SJ103
R23
1MEG
R24
15k
R11
6040
C2
0.2n
R35
330
R7
6040
R17
270
R19
270
V1
25Vdc
V2
25Vdc
OUT+
R56
600
OUT-
IN+
IN-
V3
VOFF = 0
VAMPL = 1V
FREQ = 1k
V4
VOFF = 0
VAMPL = 1V
FREQ = 1k