R20/R21 set output voltage swing. Output is 2VRMS at 0db as shown.

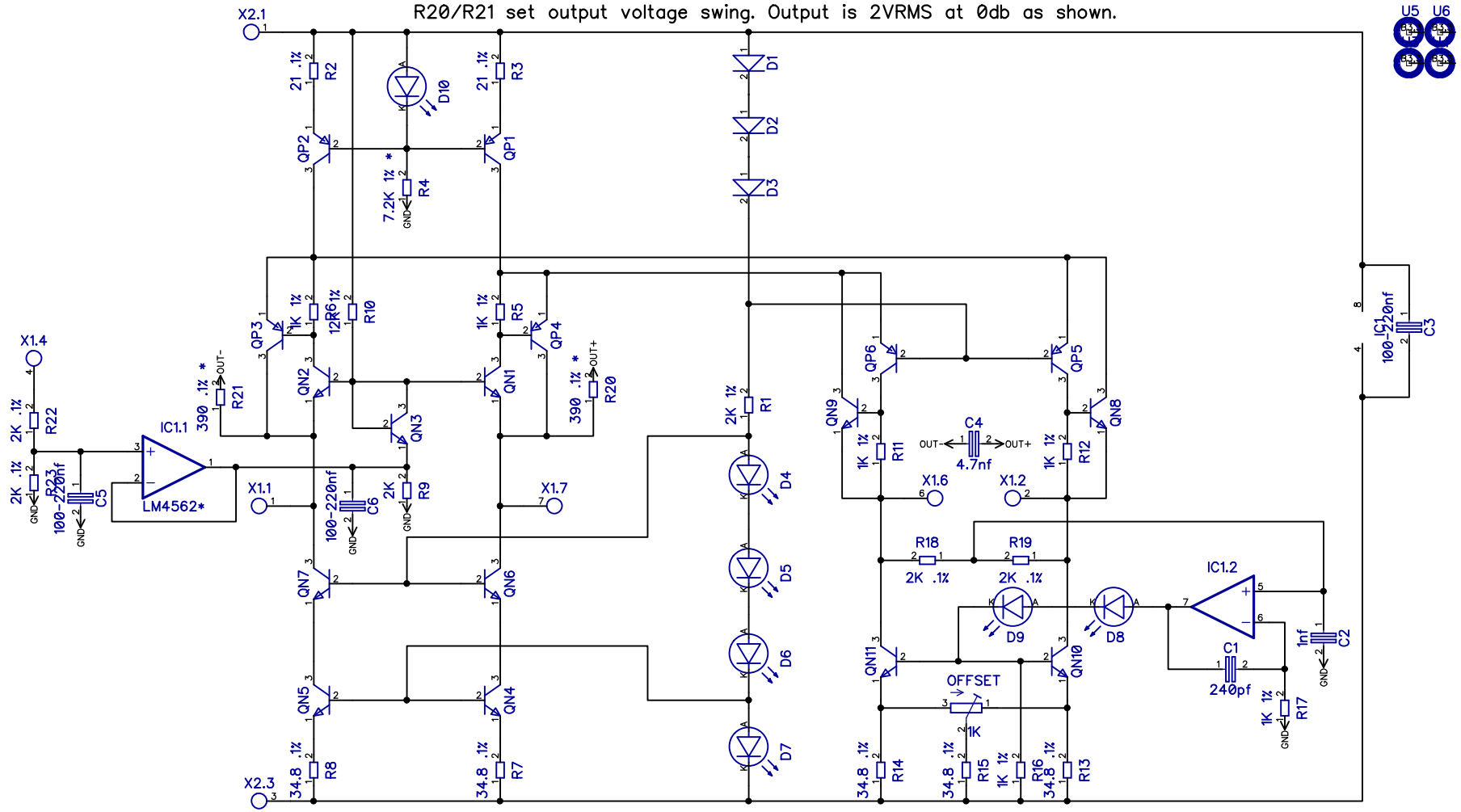

Adjust the offset potentiometer until the outputs are at 0V to eachother

Part Values shown for use with the Buffalo DAC

Twisted Pear Audio	Counterpoint A balanced symmetrical I/V stage and filter			
	Russ White			
DIY Use Only	SIZE	FSCM NO.	DWG NO.	REV 0.1
Copyright 2008	SCALE		Sheet 1	