.tran {1/freq} {(vin) v(out)}
;tran 0 {simtime} {dlytime} {numsampl}

.MODEL IF3602-IFT NJF VTO=-1.5 BETA=260m LAMBDA=1m RD=0.04 RS=0.04 CGS=600p CGD=1200p PB=0.75 IS=50000f AF=1 FC=0.5 BETATCE=-0.5 N=1 NR=2 XTI=3 VTOTC=-2.5m ALPHA=1u VK=1 ISR=10f KF=0.001f M=0.5 B=1.8 NLEV=2 MFG=InterFET

OPA1652

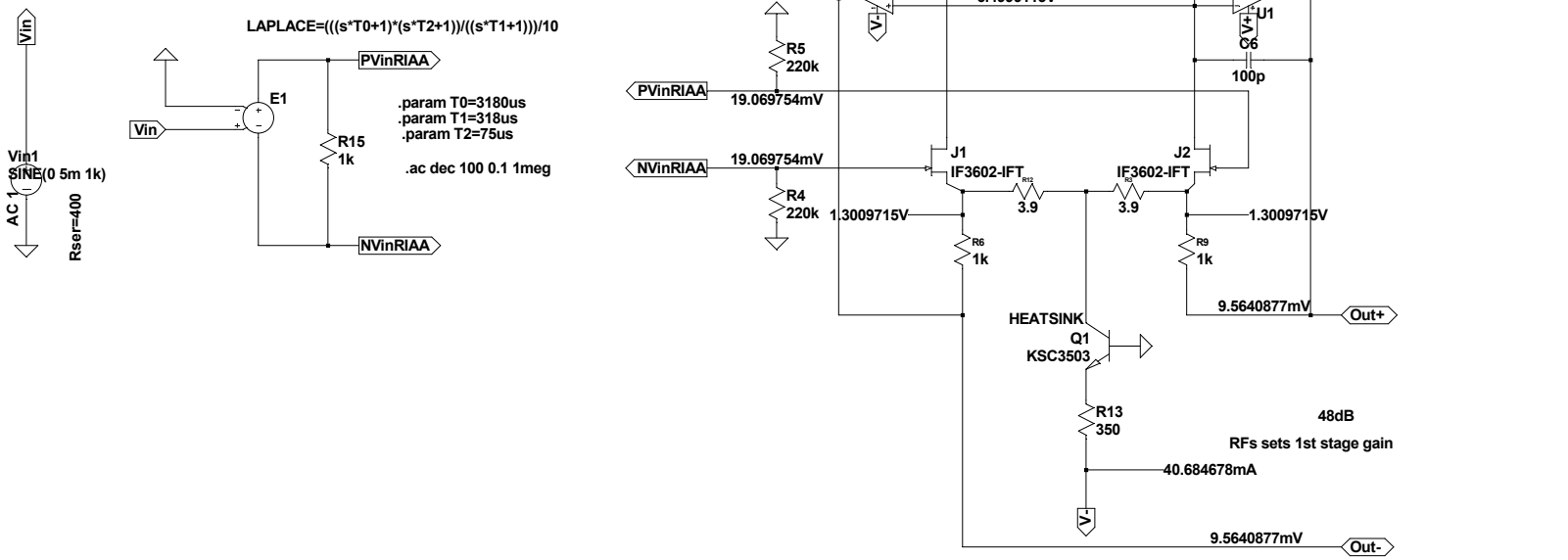

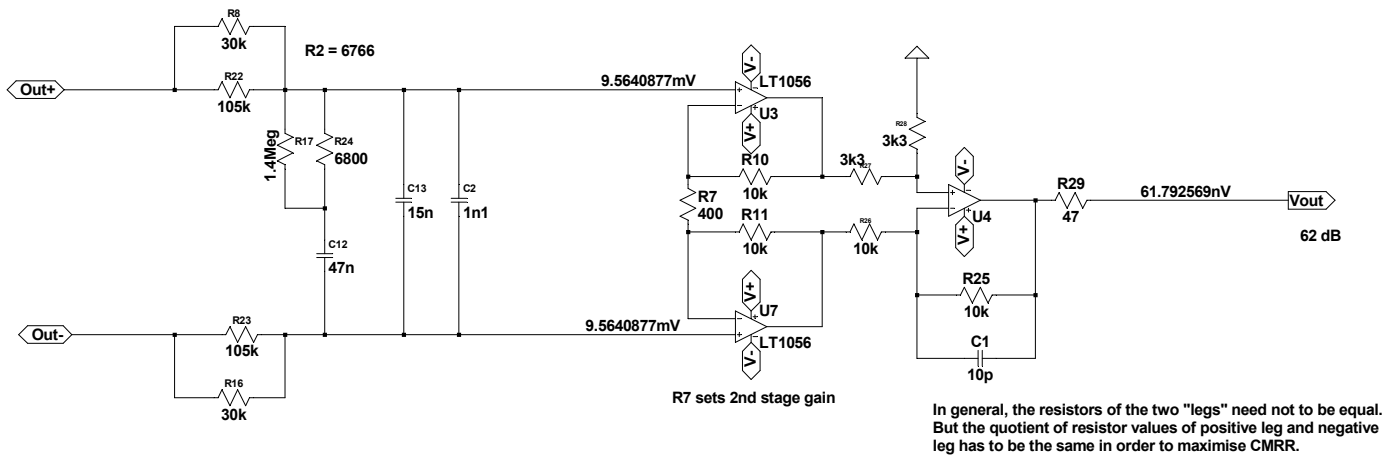

In general, the resistors of the two "legs" need not to be equal.
But the quotient of resistor values of positive leg and negative leg has to be the same in order to maximise CMRR.

```
.MODEL KSC3503 NPN
+ IS    =2.0893E-14
+ BF    =101.5
+ NF    =1.0
+ BR    =7.655
+ NR    =1.007
*+ IBC   =2.0893E-14
*+ IBC   =2.0893E-14
+ ISE   =4.3652E-14
+ NE    =1.5
+ ISC   =1.2598E-9
+ NC    =2.0
+ VAF   =717.25
+ VAR   =13.16
+ IKF   =0.2512
+ IKR   =0.0832
+ RB    =2.98
+ RBM   =0.001
+ IRB   =0.001
+ RE    =0.5305
+ RC    =0.9
+ QCO   =0.05
+ RCO   =50.1187
+ VO    =2.476
+ GAMMA =1.8231E-7
+ CJE   =6.6039E-11
+ VJE   =0.7017
+ MJE   =0.3253
+ FC    =0.5
+ CJC   =6.6072E-12
+ VJC   =0.5
+ MJC   =0.2439
+ XCJC  =0.6488
+ XTB   =1.4089
+ EG    =1.2129
+ XTI   =3.0
```