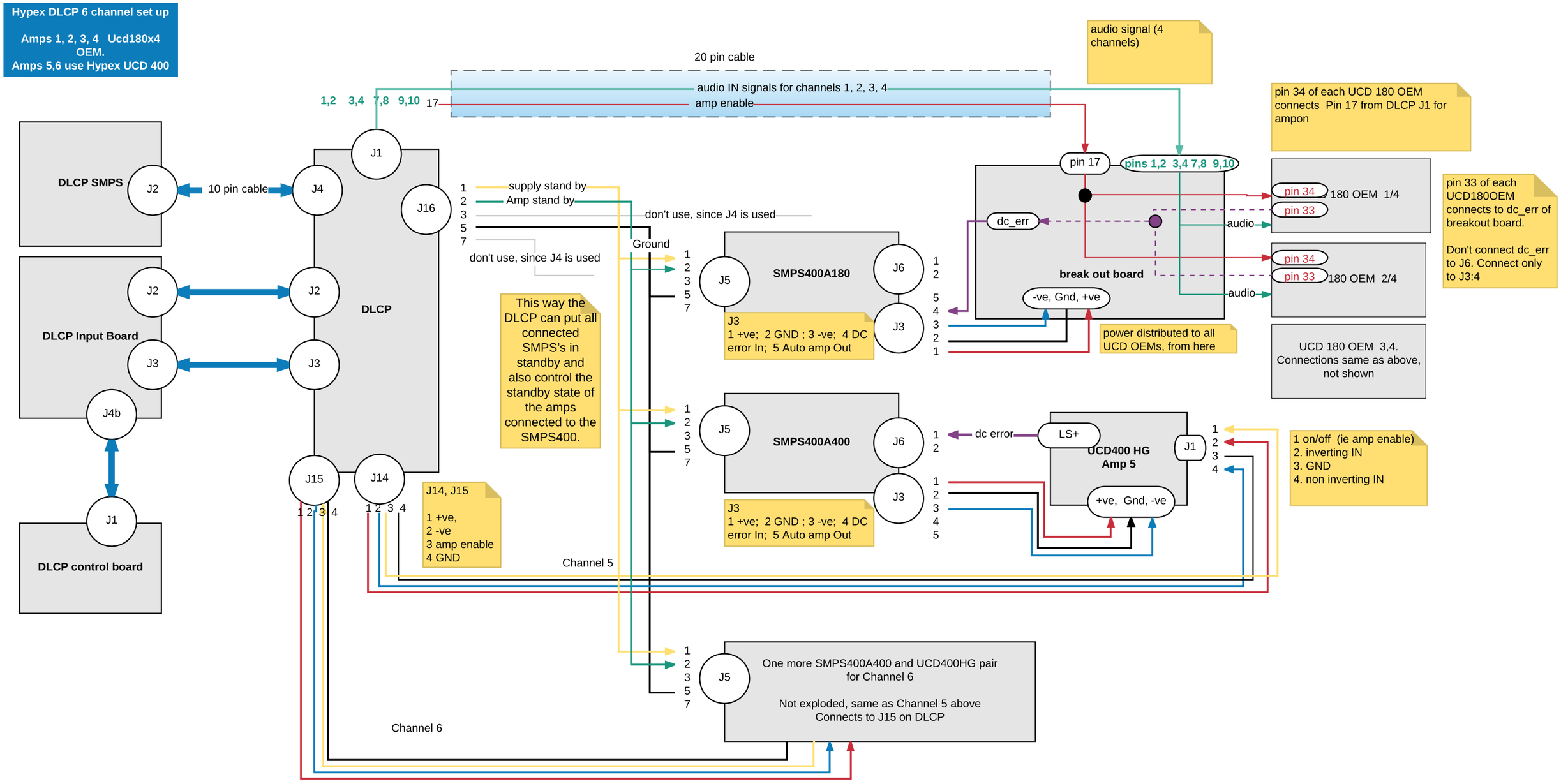
Hypex DLCP 6 channel set up
Amps 1, 2, 3, 4 Ucd180x4 OEM.
Amps 5,6 use Hypex UCD 400
20 pin cable
audio IN signals for channels 1, 2, 3, 4
amp enable
1,2 3,4 7,8 9,10 17
audio signal (4 channels)
pin 34 of each UCD 180 OEM connects Pin 17 from DLCP J1 for ampon
DLCP SMPS
J2
10 pin cable
J4
J1
J16
DLCP
supply stand by
Amp stand by
don't use, since J4 is used
don't use, since J4 is used
Ground
DLCP Input Board
J2
J3
J4b
J1
DLCP control board
J15
J14
1 2 3 4
1 2 3 4
J14, J15
1 +ve,
2 -ve
3 amp enable
4 GND
This way the DLCP can put all connected SMPS's in standby and also control the standby state of the amps connected to the SMPS400.
Channel 5
Channel 6
J5
SMPS400A180
J6
J3
J3
1 +ve; 2 GND ; 3 -ve; 4 DC error In; 5 Auto amp Out
SMPS400A400
dc error
LS+
UCD400 HG Amp 5
+ve, Gnd, -ve
break out board
pin 17
pins 1,2 3,4 7,8 9,10
dc_err
audio
-ve, Gnd, +ve
power distributed to all UCD OEMs, from here
pin 34
pin 33
180 OEM 1/4
180 OEM 2/4
pin 33 of each UCD180OEM connects to dc_err of breakout board.
Don't connect dc_err to J6. Connect only to J3:4
UCD 180 OEM 3,4. Connections same as above, not shown
1 on/off (ie amp enable)
2. inverting IN
3. GND
4. non inverting IN
One more SMPS400A400 and UCD400HG pair for Channel 6
Not exploded, same as Channel 5 above
Connects to J15 on DLCP