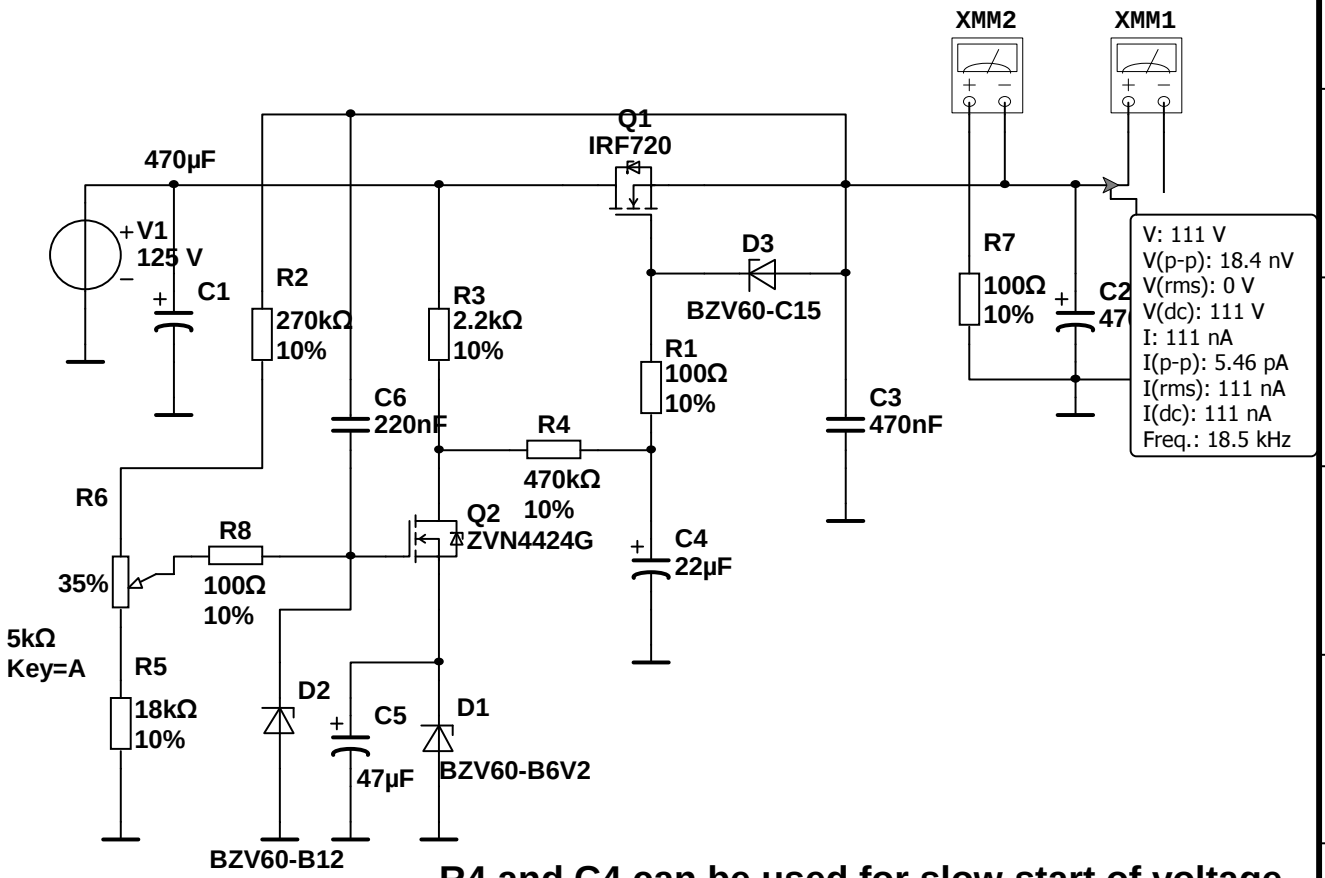

R4 and C4 can be used for slow start of voltage.

100 ohm on output (R7) is only for output current test in simulation, Q2 can also be a npn bjt mpsa42 with some little changes of resistors.

Let me now about it and updates, it will be used for tube driver of hybride, (max 150 mA).

it is for low drop 2 x 110 volt, with input 125 volt, this is for one side of supply it is differential.

Thanks for Tubecad.com for ideas.