RCP130 FETSYM EVO9.2 KRISHNA
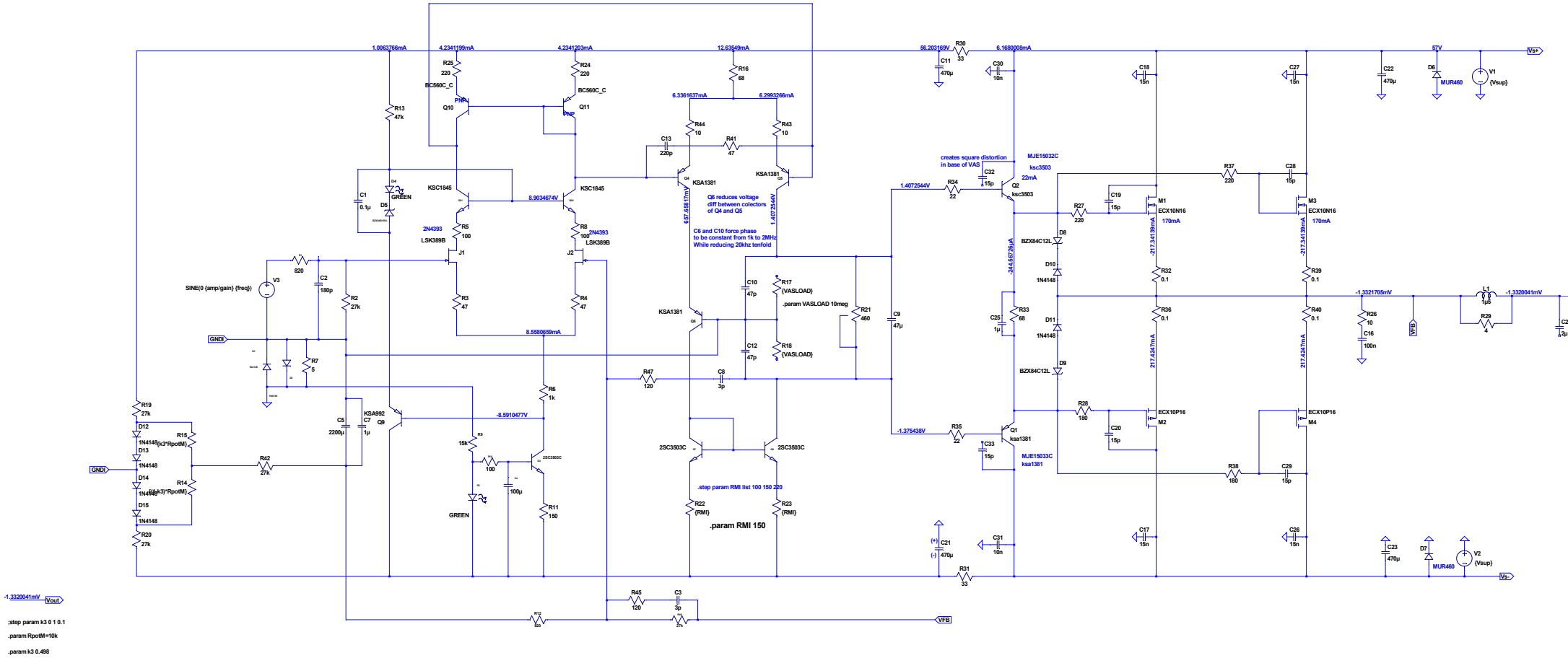
SOFT CLIP