RCP130 GAIA DIFPAIRVAS EVO10.822C
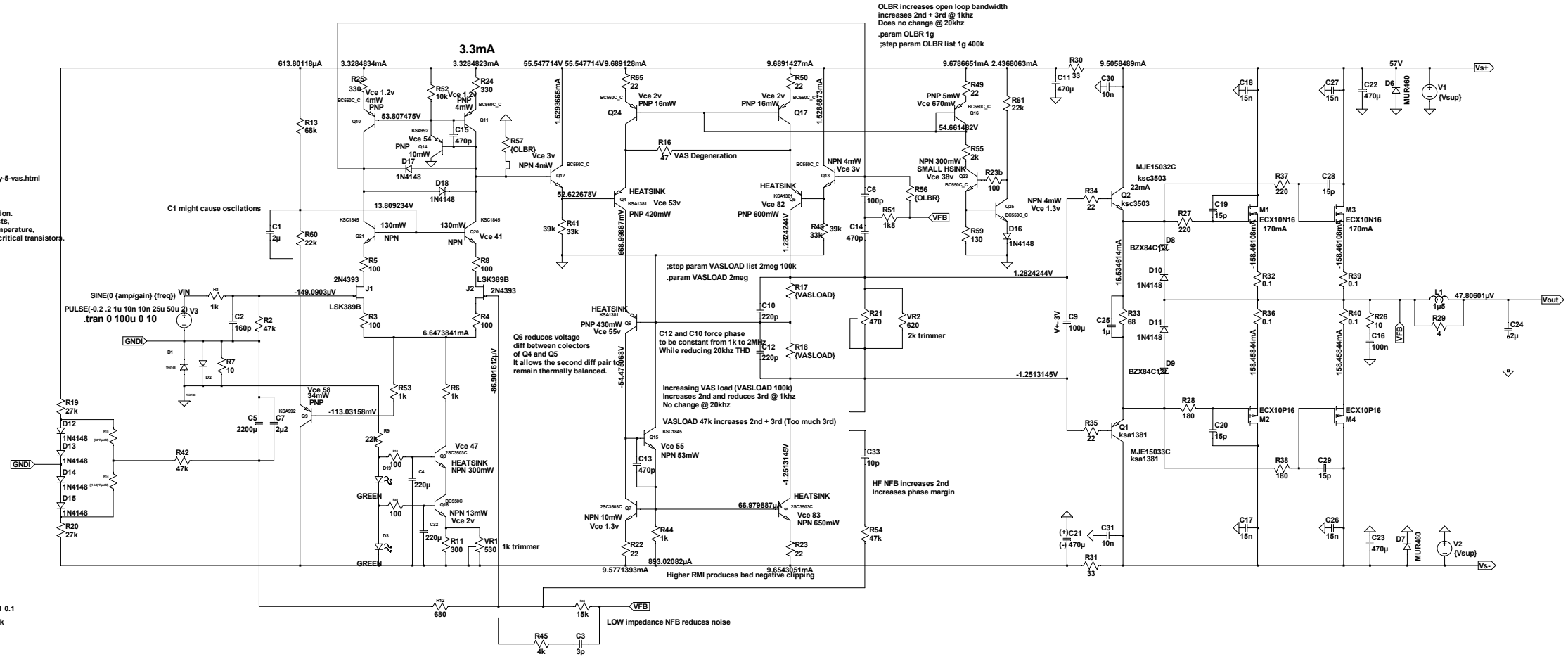
CLEAN CLIP