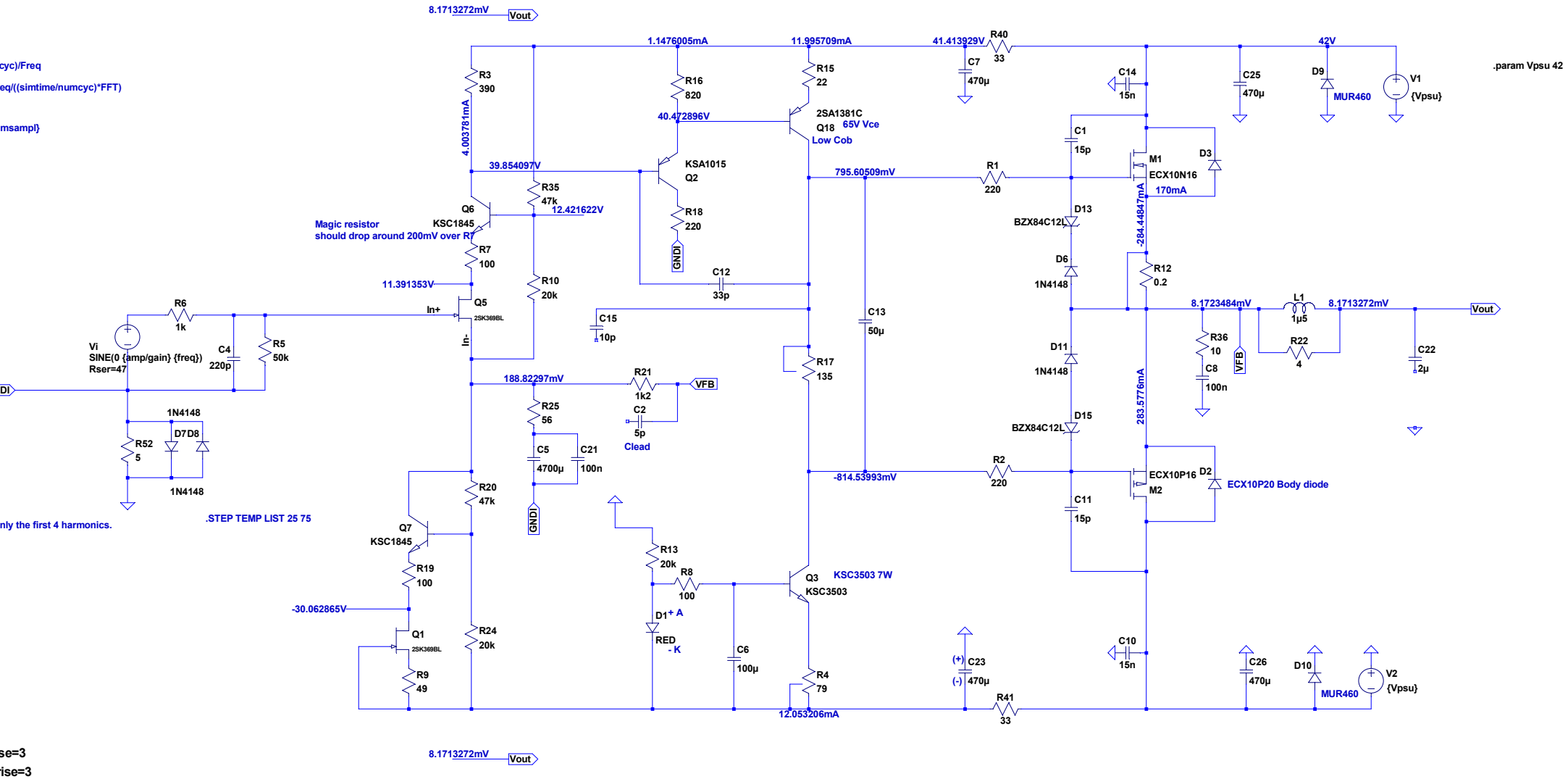+ FC = 0.5 CJC = 9.70035E-12 VJC = 0.523999
+ MJC = 0.283255 XCJC = 0.45 TF = 1.99E-9
+ XTB = 1.182 EG = 1.1574 XTI = 3)