NOTES: UNLESS SPECIFIED OTHERWISE
1. ALL RESISTORS IN OHMS
2. ALL CAPACITORS IN MICROFARADS
3. COMMON PARTS DESIGNATORS 1 TO 99
4. LEFT CHANNEL DESIGNATORS 101 TO 199
5. RIGHT CHANNEL 201 TO 299

Z	SYM	DA	REVISION RECORD	AUTHORITY	DRAW	CHECK
			RELEASED			

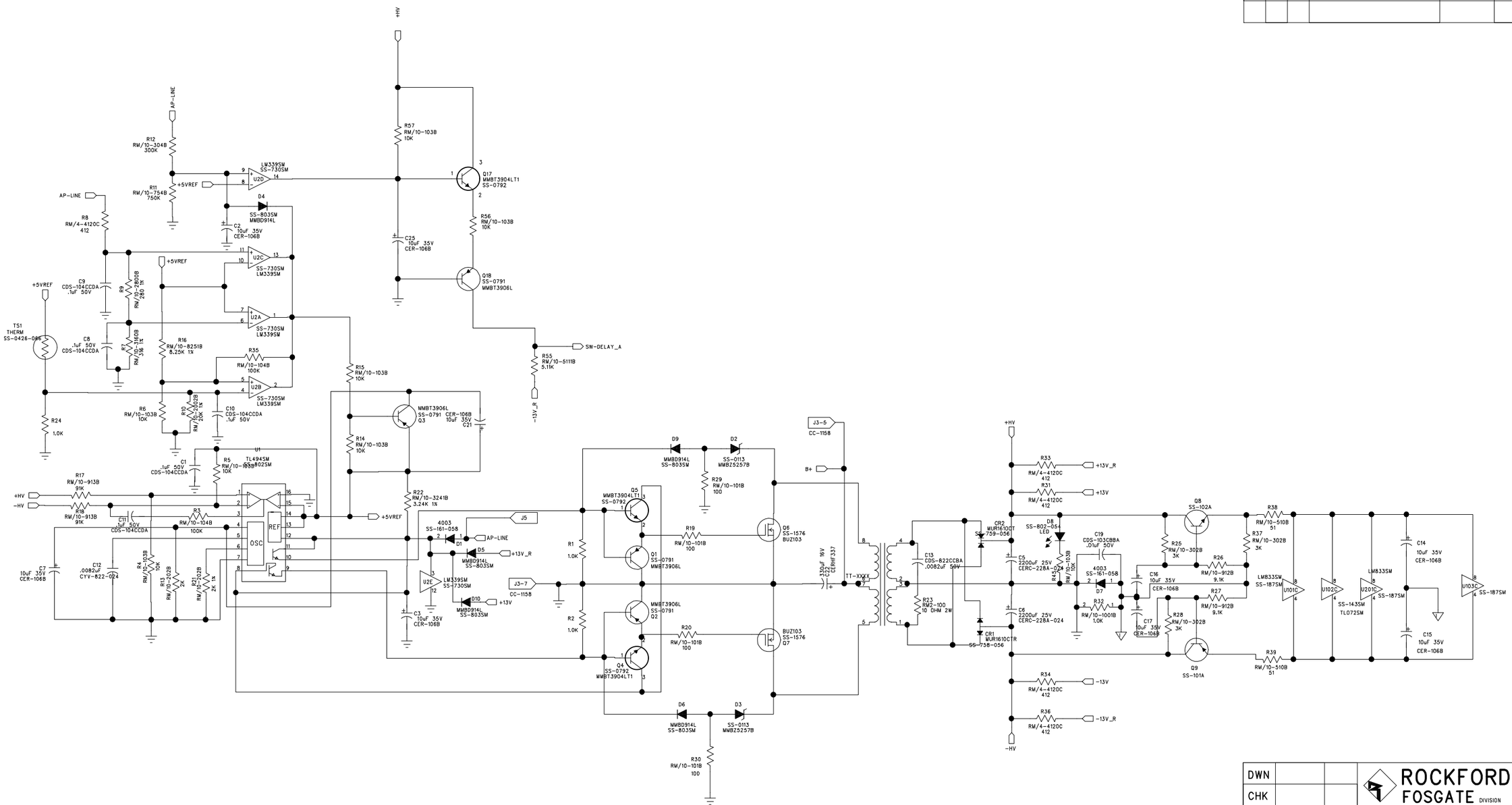

DWN			ROCKFORD FOSGATE CORPORATION DIVISION TEMPE AZ
CHK			TITLE PUNCH 100.2 POWER SUPPLY
ENGR	C. Castrejon	03/03/98	
APVD	C. Castrejon	03/03/98	
APVD			SIZE / SCALE / SHEET 1 OF 3
MATL/FS			FILE NAME / PART NO. / REV B

REV | FILE NAME | PART NO.