RP2 - Ток на покой.

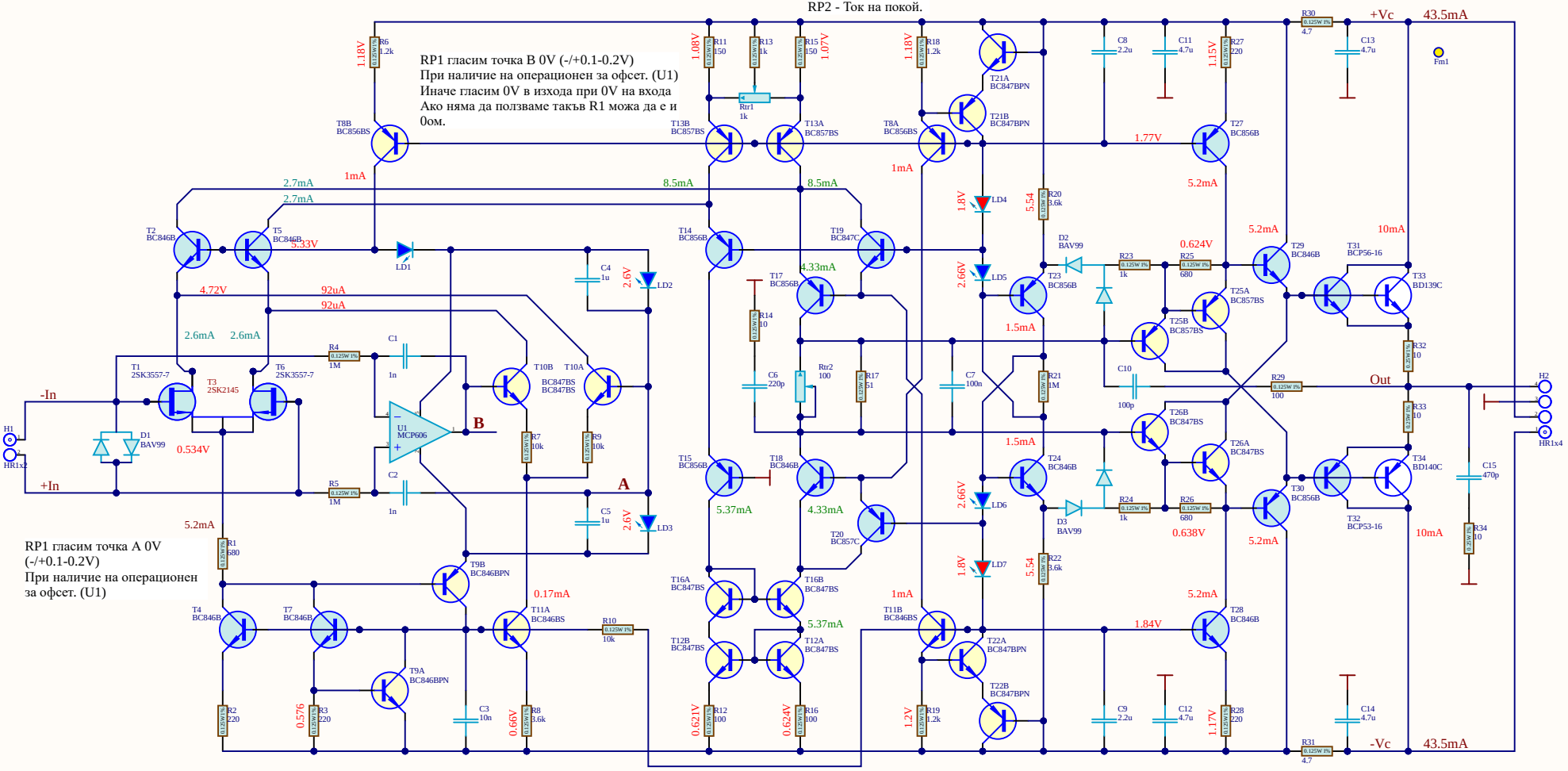

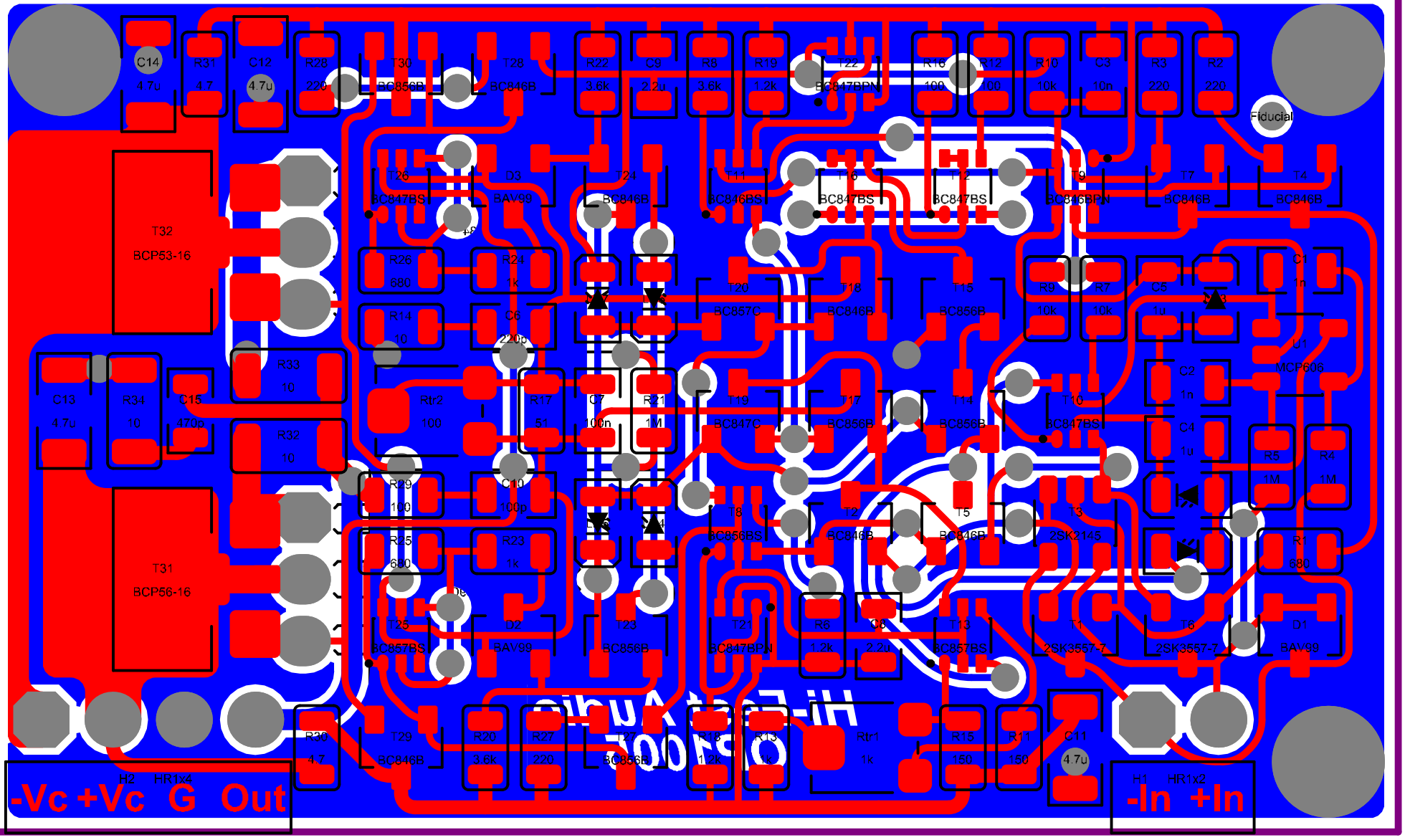
C14
4.7u
R31
4.7
C12
4.7u
R28
220
T30
BC856B
T28
BC846B
R22
3.6k
C9
2.2u
R8
3.6k
R19
1.2k
T22
BC847BPN
R16
100
R12
100
R10
10k
C3
10n
R3
220
R2
220
Fiducial
T32
BCP53-16
T26
BC847BS
D3
BAV99
T24
BC846B
T11
BC846BS
T16
BC847BS
T12
BC847BS
T9
BC846BPN
T7
BC846B
T4
BC846B
R26
680
R24
1k
T20
BC857C
T18
BC846B
T15
BC856B
R9
10k
R7
10k
C5
1u
C1
1n
R14
10
C6
220p
U1
MCP606
C13
4.7u
R34
10
C15
470p
R33
10
R32
10
Rtr2
100
R17
51
C7
100n
R21
1M
T19
BC847C
T17
BC856B
T14
BC856B
T10
BC847BS
C2
1n
C4
1u
R5
1M
R4
1M
R29
100
C10
100p
T8
BC856BS
T2
BC846B
T5
BC846B
T3
2SK2145
R1
680
T31
BCP56-16
R25
680
R23
1k
T25
BC857BS
D2
BAV99
T23
BC856B
T21
BC847BPN
R6
1.2k
C8
2.2u
T13
BC857BS
T1
2SK3557-7
T6
2SK3557-7
D1
BAV99
R30
4.7
T29
BC846B
R20
3.6k
R27
220
T27
BC856B
R18
1.2k
R13
1k
Rtr1
1k
R15
150
R11
150
C11
4.7u
H2
HR1x4
H1
HR1x2
-Vc +Vc G Out
-In +In

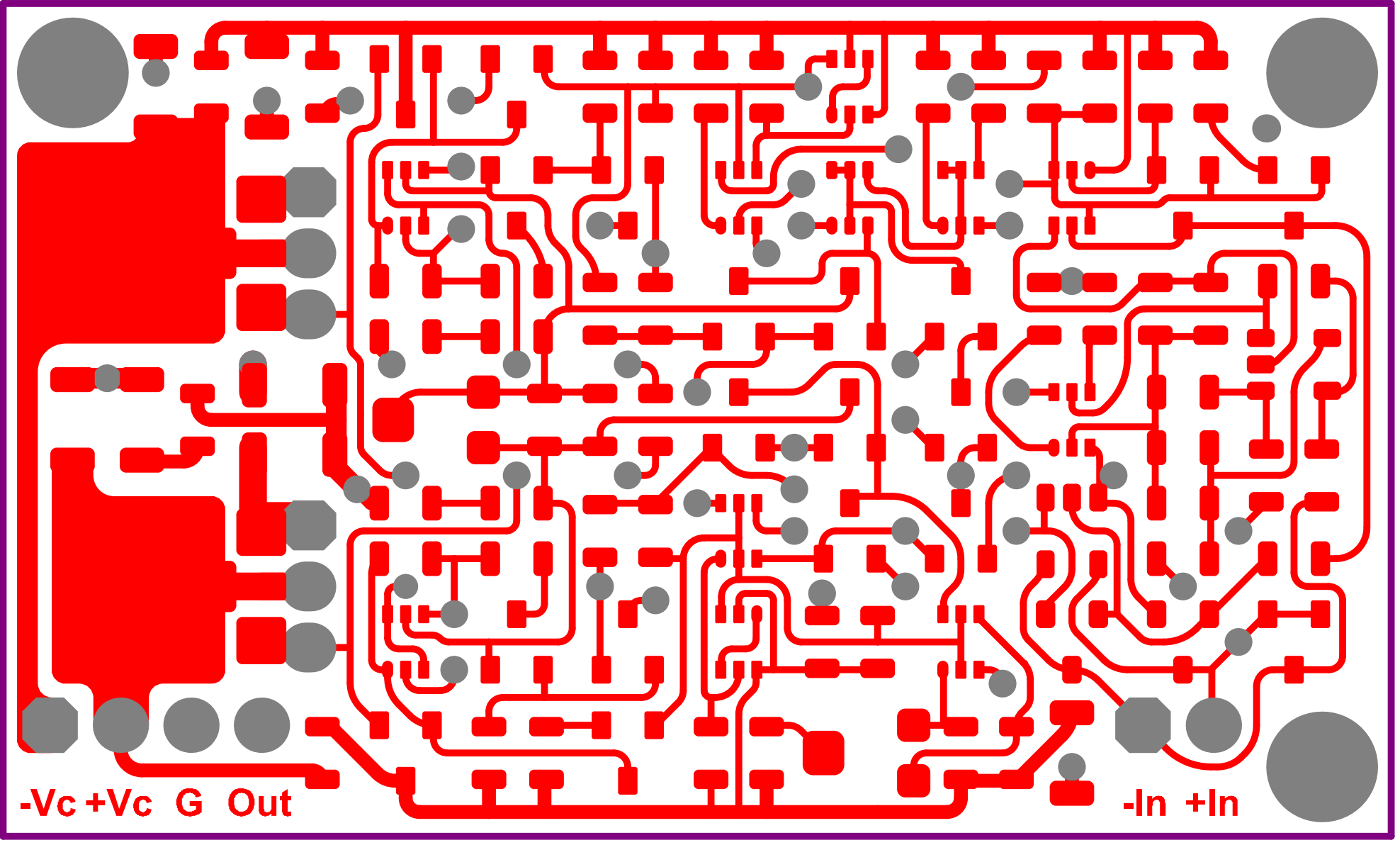
-Vc
+Vc
G
Out
-In
+In

Hi-Fest Audio
OP1005

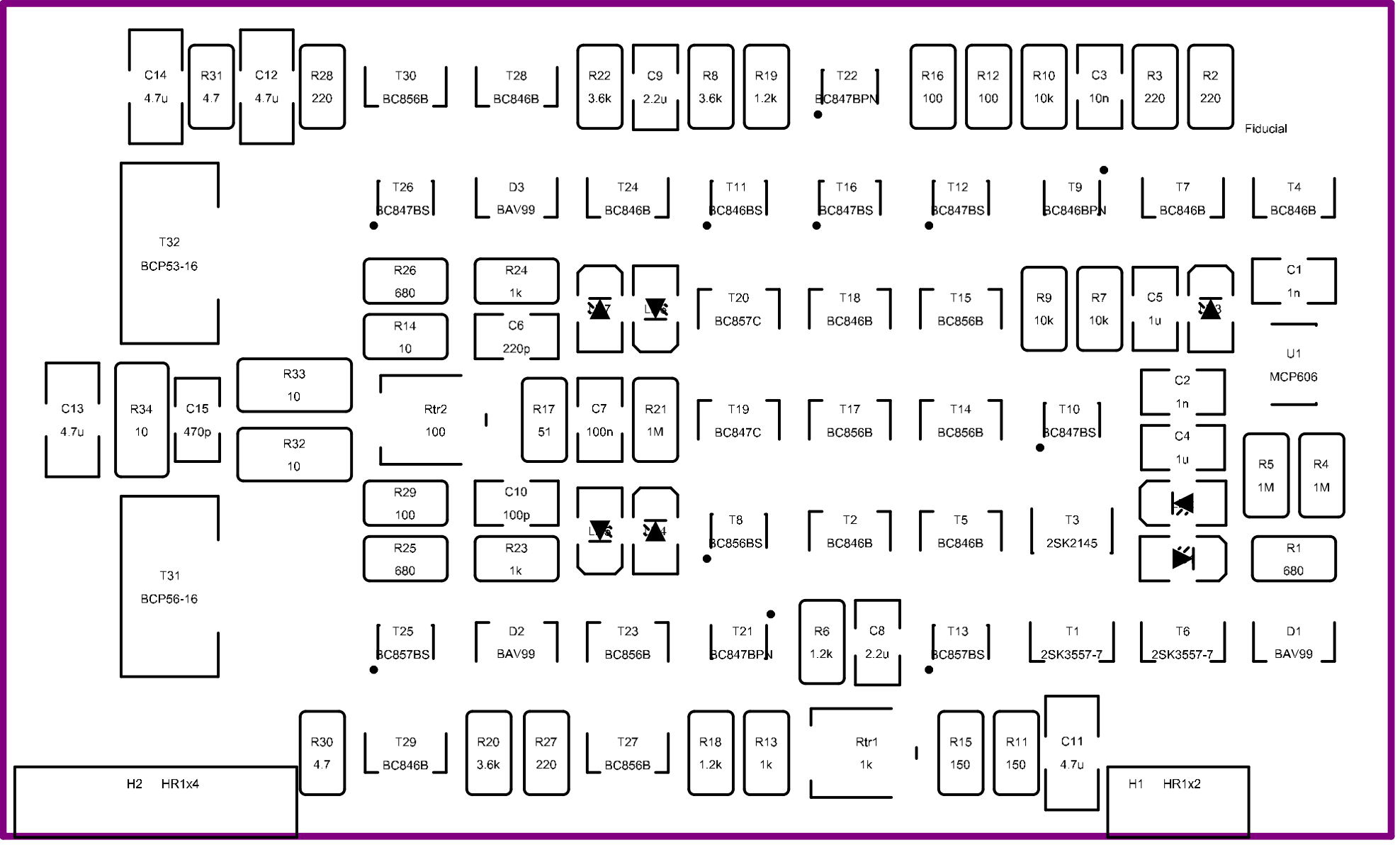
C14
4.7u
R31
4.7
C12
4.7u
R28
220
T30
BC856B
T28
BC846B
R22
3.6k
C9
2.2u
R8
3.6k
R19
1.2k
T22
BC847BPN
R16
100
R12
100
R10
10k
C3
10n
R3
220
R2
220
Fiducial
T32
BCP53-16
T26
BC847BS
D3
BAV99
T24
BC846B
T11
BC846BS
T16
BC847BS
T12
BC847BS
T9
BC846BPN
T7
BC846B
T4
BC846B
R26
680
R24
1k
T20
BC857C
T18
BC846B
T15
BC856B
R9
10k
R7
10k
C5
1u
C1
1n
R14
10
C6
220p
U1
MCP606
C13
4.7u
R34
10
C15
470p
R33
10
R32
10
Rtr2
100
R17
51
C7
100n
R21
1M
T19
BC847C
T17
BC856B
T14
BC856B
T10
BC847BS
C2
1n
C4
1u
R5
1M
R4
1M
R29
100
C10
100p
T8
BC856BS
T2
BC846B
T5
BC846B
T3
2SK2145
R25
680
R23
1k
R1
680
T31
BCP56-16
T25
BC857BS
D2
BAV99
T23
BC856B
T21
BC847BPN
R6
1.2k
C8
2.2u
T13
BC857BS
T1
2SK3557-7
T6
2SK3557-7
D1
BAV99
R30
4.7
T29
BC846B
R20
3.6k
R27
220
T27
BC856B
R18
1.2k
R13
1k
Rtr1
1k
R15
150
R11
150
C11
4.7u
H2 HR1x4
H1 HR1x2

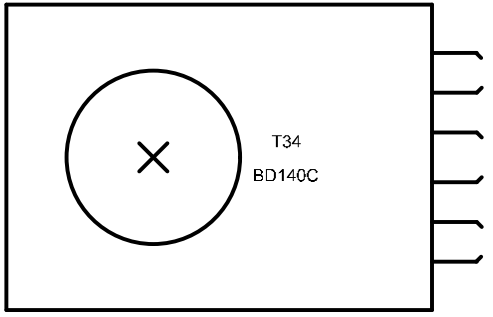
T34
BD140C

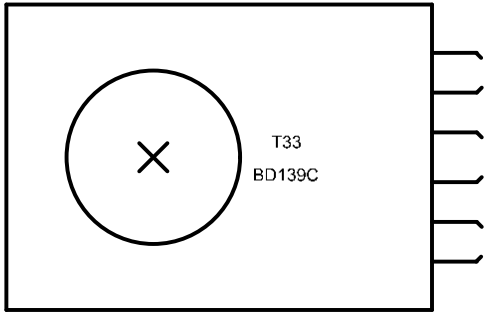
T33
BD139C