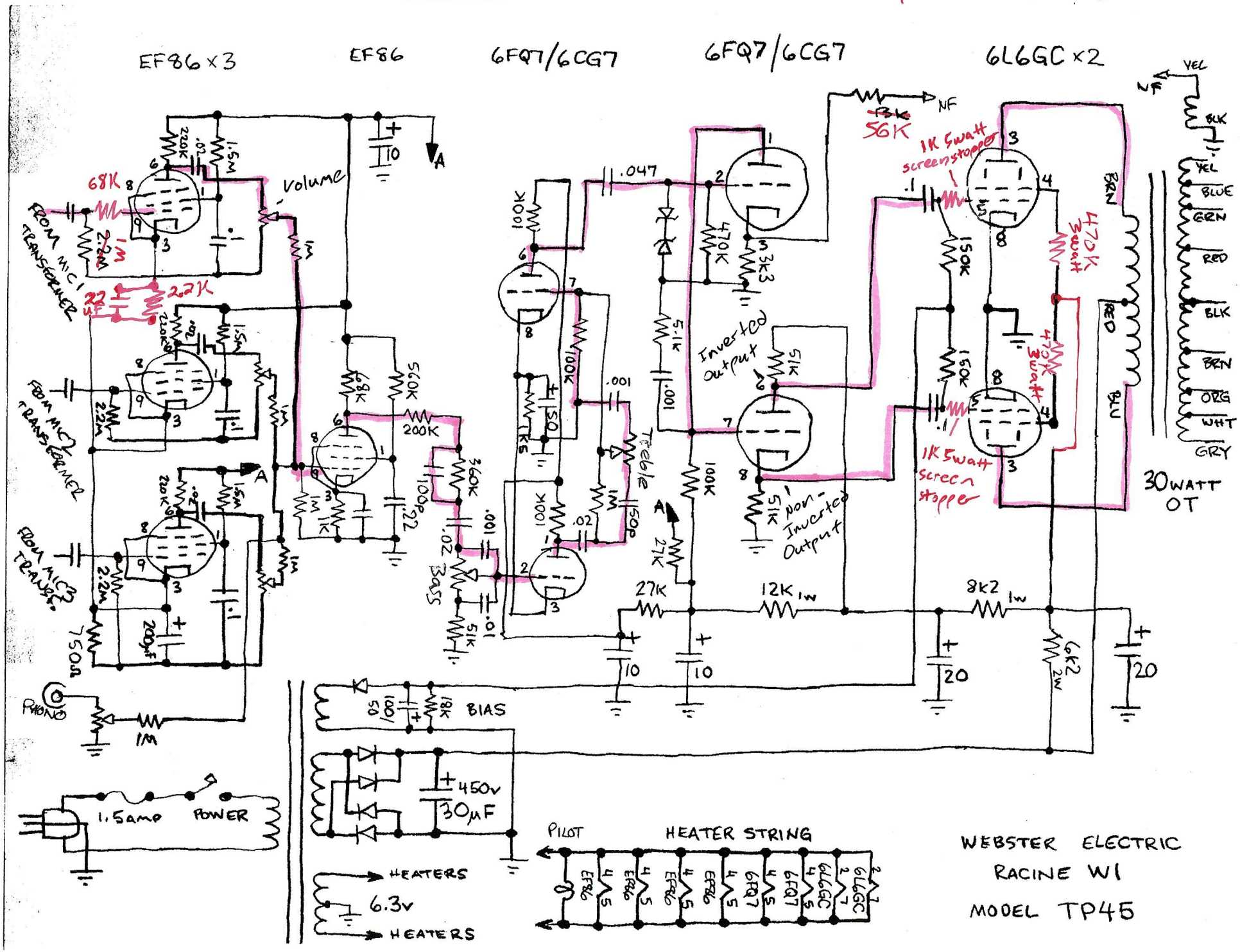Signal Path Mic 1 — Preposed Changes