AUDIO & ANALOG POWER SUPPLY CIRCUITRY

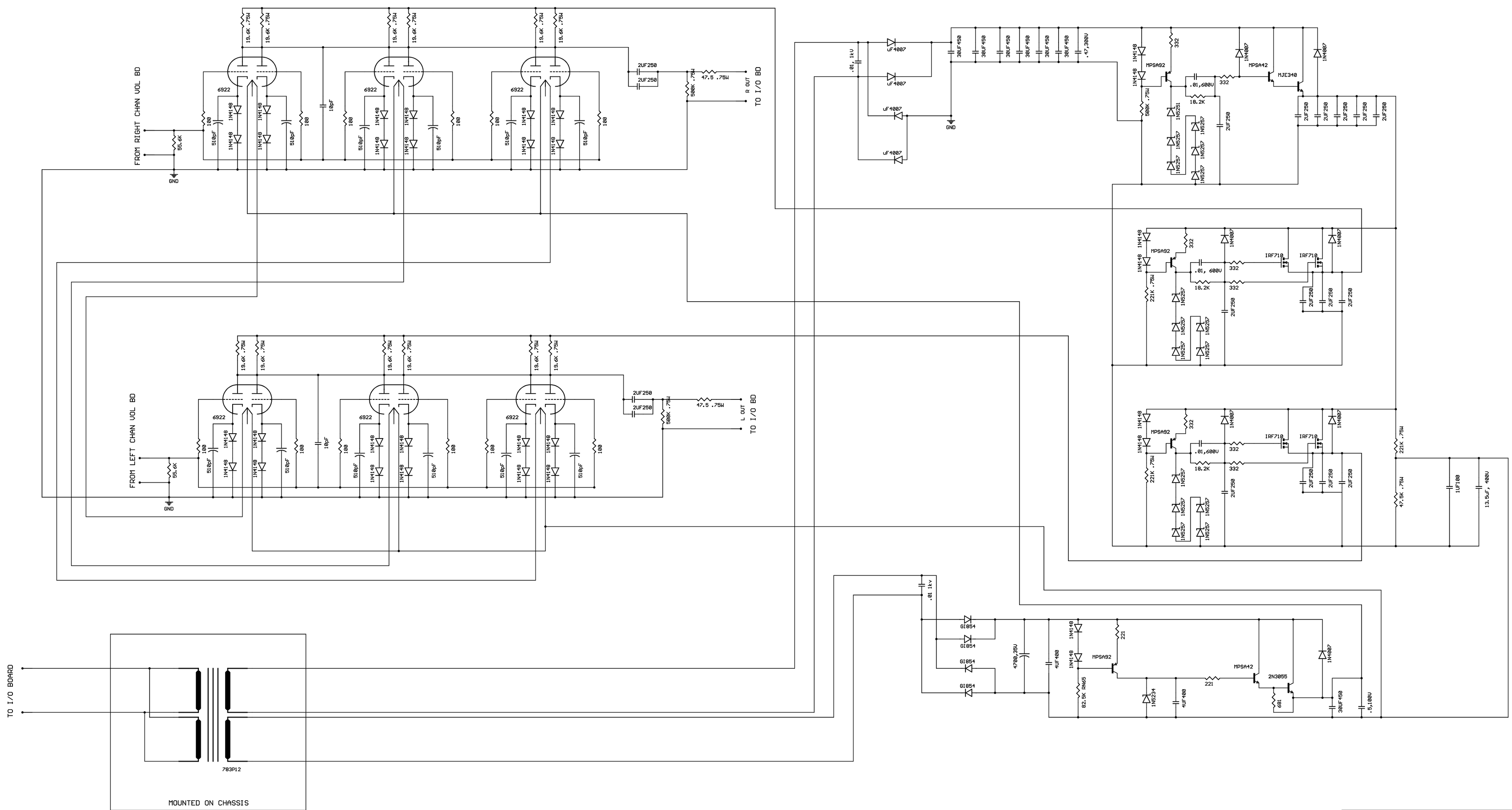

CONRAD-JOHNSON DESIGN, INC.	
TITLE: PREM16	
Document Number: SERIES 290	REV: 3
Date: 9/17/1999 07:05:54a	Sheet: 1/3