IN SACD LEFT HOT

IN SACD LEFT COLD

IN SACD RIGHT HOT

IN SACD RIGHT COLD

IN DAC LEFT HOT

IN DAC LEFT COLD

IN DAC RIGHT HOT

IN DAC RIGHT COLD

IN DENON RIGHT

IN DENON LEFT

IN YAMAHA RIGHT

IN YAMAHA LEFT

OUT RIGHT HOT

OUT RIGHT COLD

OUT LEFT HOT

OUT LEFT COLD

NEBAL

DENON

YAMAHA

SACD

DAC

MUTING

REL1

REL2

REL3

REL4

REL5

REL6

REL7

REL8

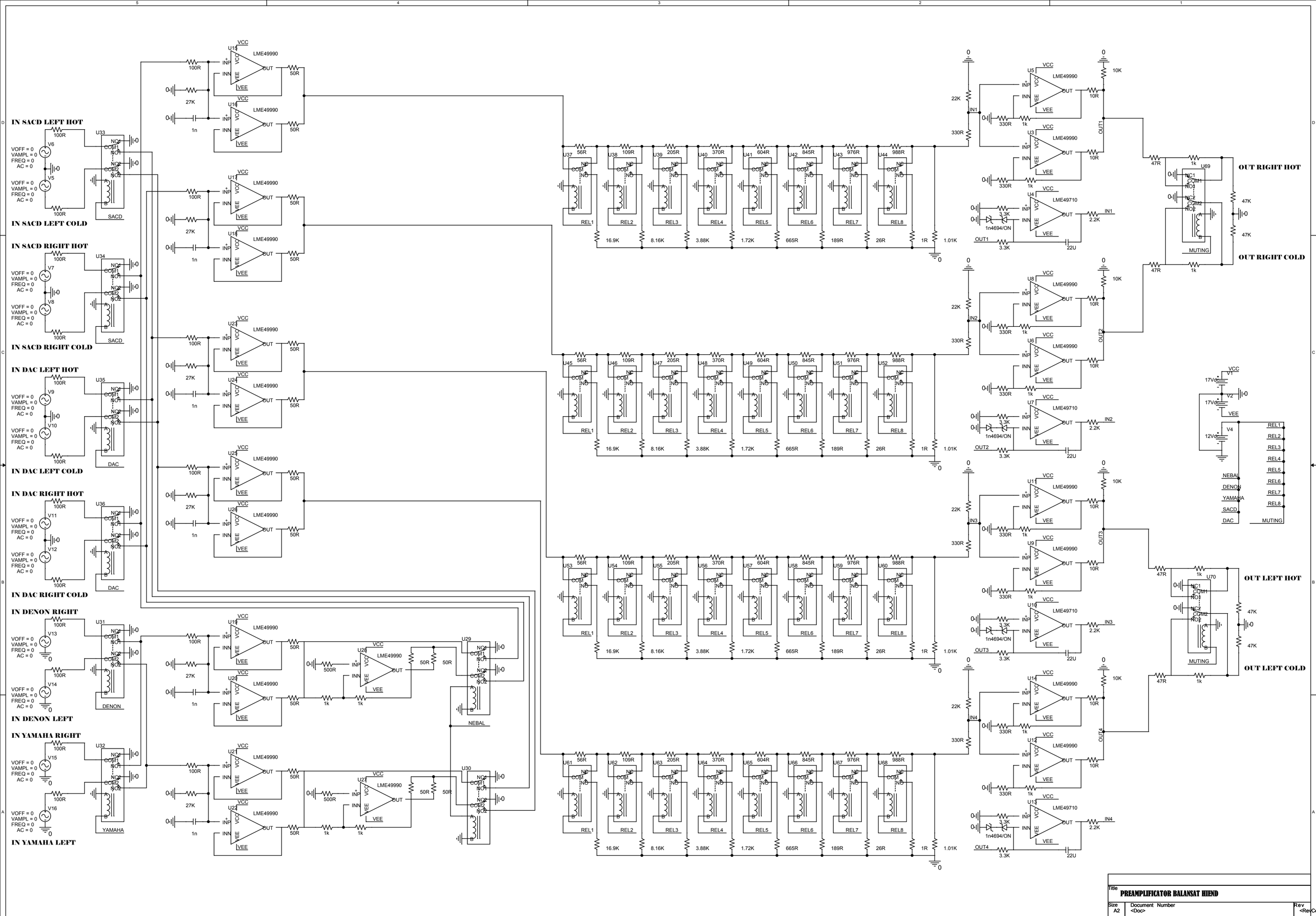

Title	PREAMPLIFICATOR BALANSAT HIEND
Size	A2
Document Number	<Doc>
Rev	<RevCo
Date:	Thursday, April 11, 2013
Sheet	1 of 1