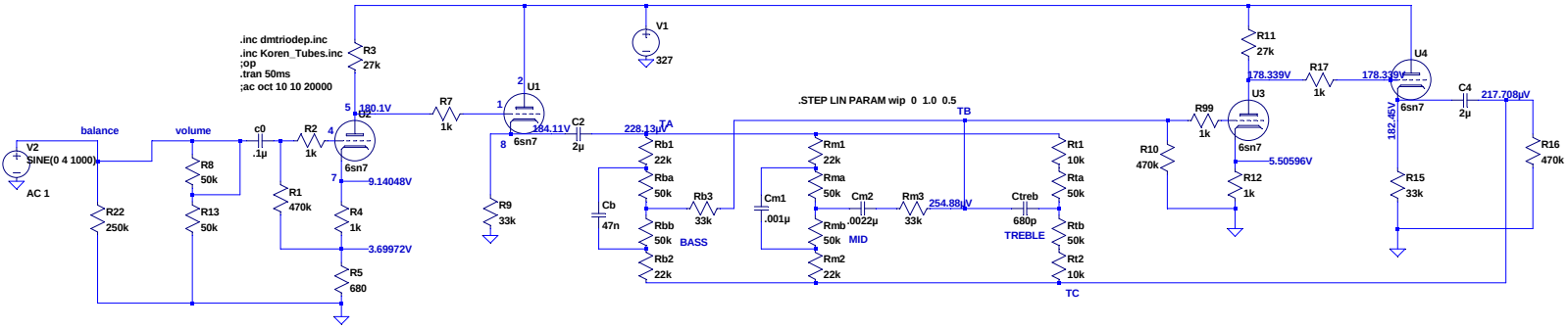
.inc dmtriodep.inc
.inc Koren_Tubes.inc
;op
.tran 50ms
;ac oct 10 10 20000
.STEP LIN PARAM wip 0 1.0 0.5
V1
327
V2
SINE(0 4 1000)
AC 1
balance
volume
c0
.1µ
R2
1k
R3
27k
R7
1k
U1
6sn7
180.1V
184.11V
9.14048V
3.69972V
R1
470k
R4
1k
R5
680
R8
50k
R13
50k
R22
250k
R9
33k
C2
2µ
228.13µV
TA
TB
Rb1
22k
Rba
50k
Rbb
50k
Rb2
22k
Cb
47n
Rb3
33k
BASS
Cm1
.001µ
Rm1
22k
Rma
50k
Rmb
50k
Rm2
22k
Cm2
.0022µ
Rm3
33k
MID
254.88µV
Ctreb
680p
TREBLE
Rt1
10k
Rta
50k
Rtb
50k
Rt2
10k
TC
R11
27k
178.339V
R17
1k
U3
R99
1k
R10
470k
R12
1k
5.50596V
U4
C4
2µ
217.708µV
182.45V
R15
33k
R16
470k