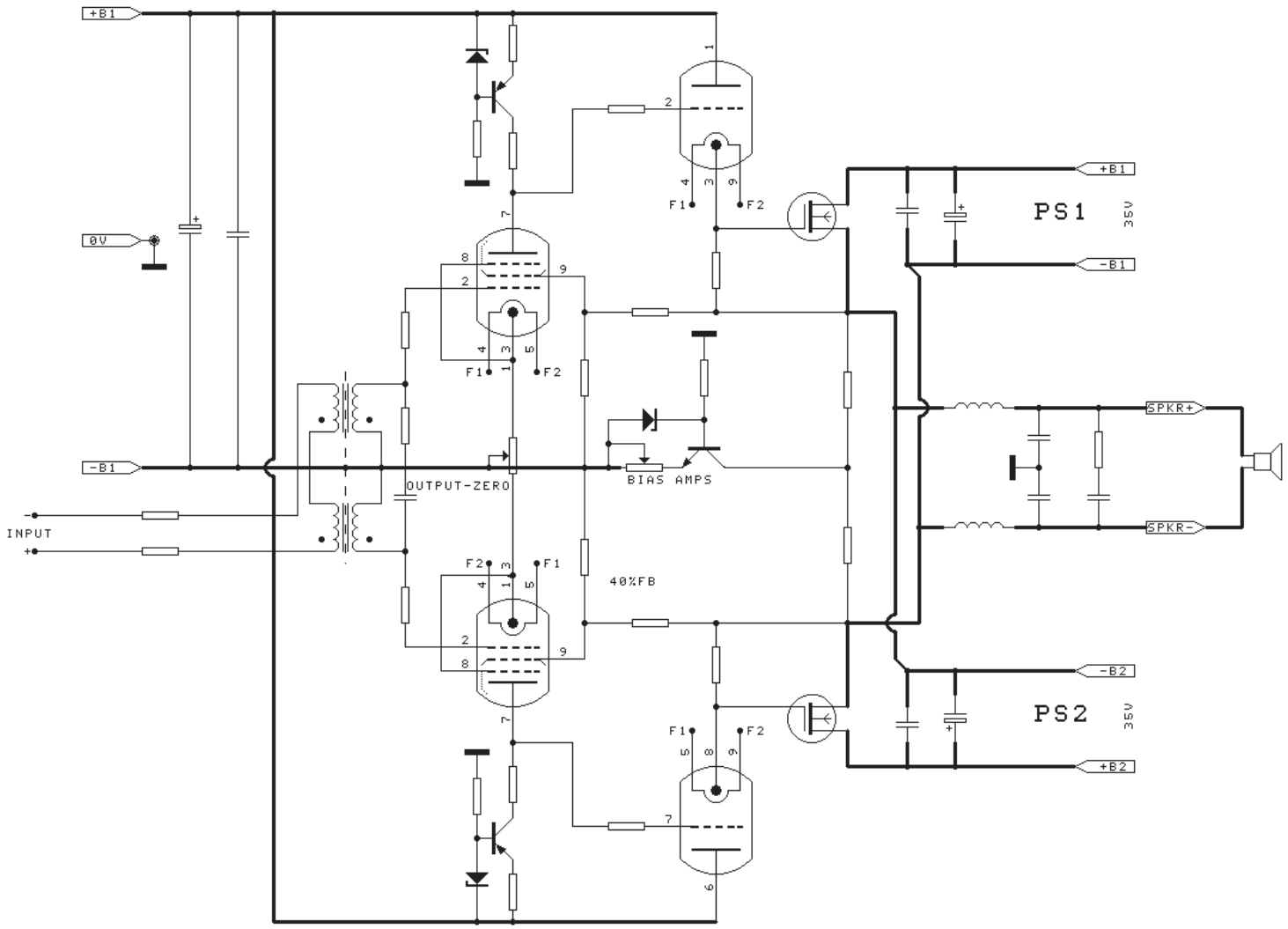

Title	PPP2000 Ultra Linear	
Size A3	Number 10-2000	Revision 0.0
Date: 6-OCT 2000		Sheet 1 of
File: PPP2000/1		Drawn By: myers