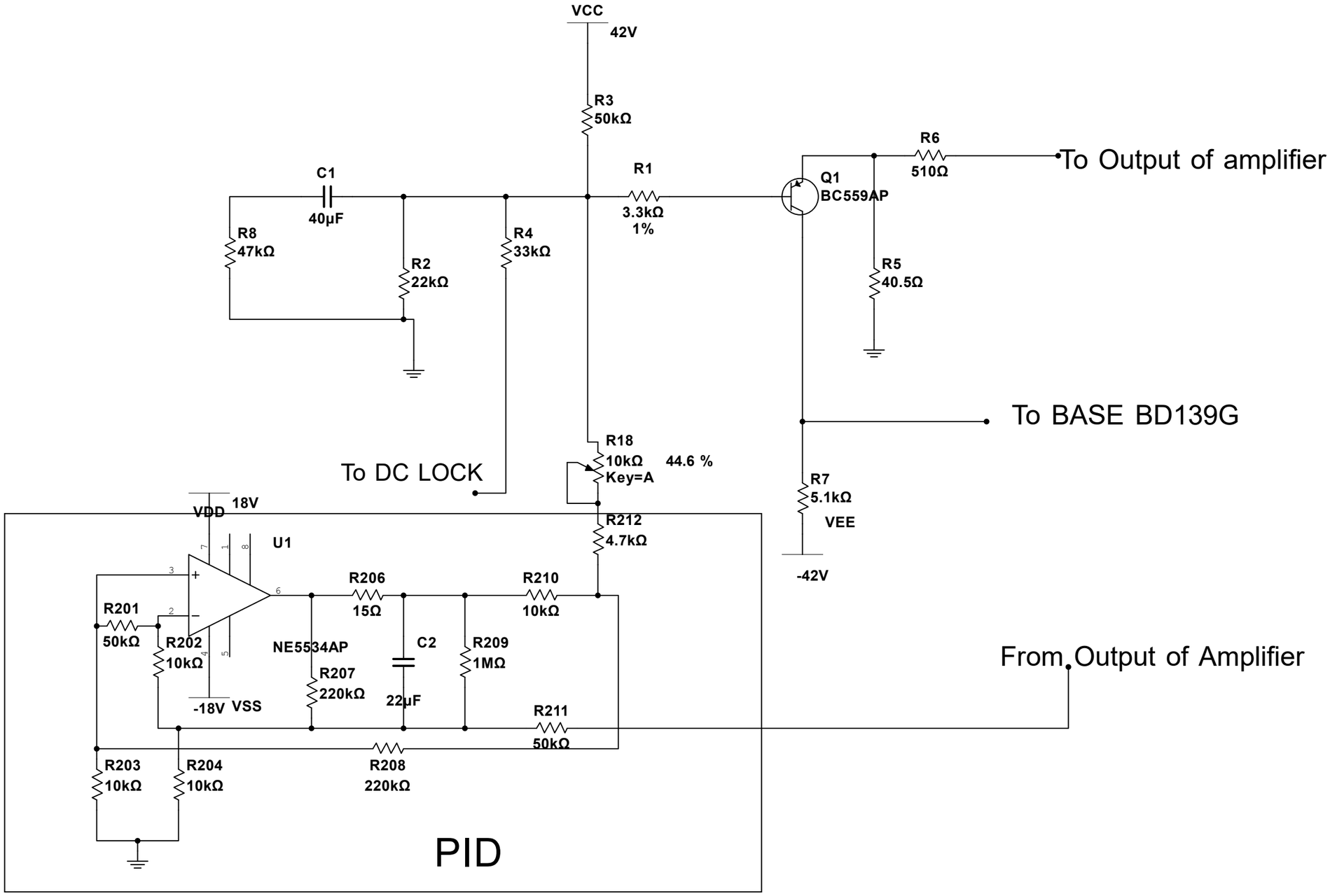PID Control cirquit for CLASS A Single End Amplifier