HV Regulated DC Bench Supply
Pete Millettt 2008
(redrawn 2021 by HAReynolds)

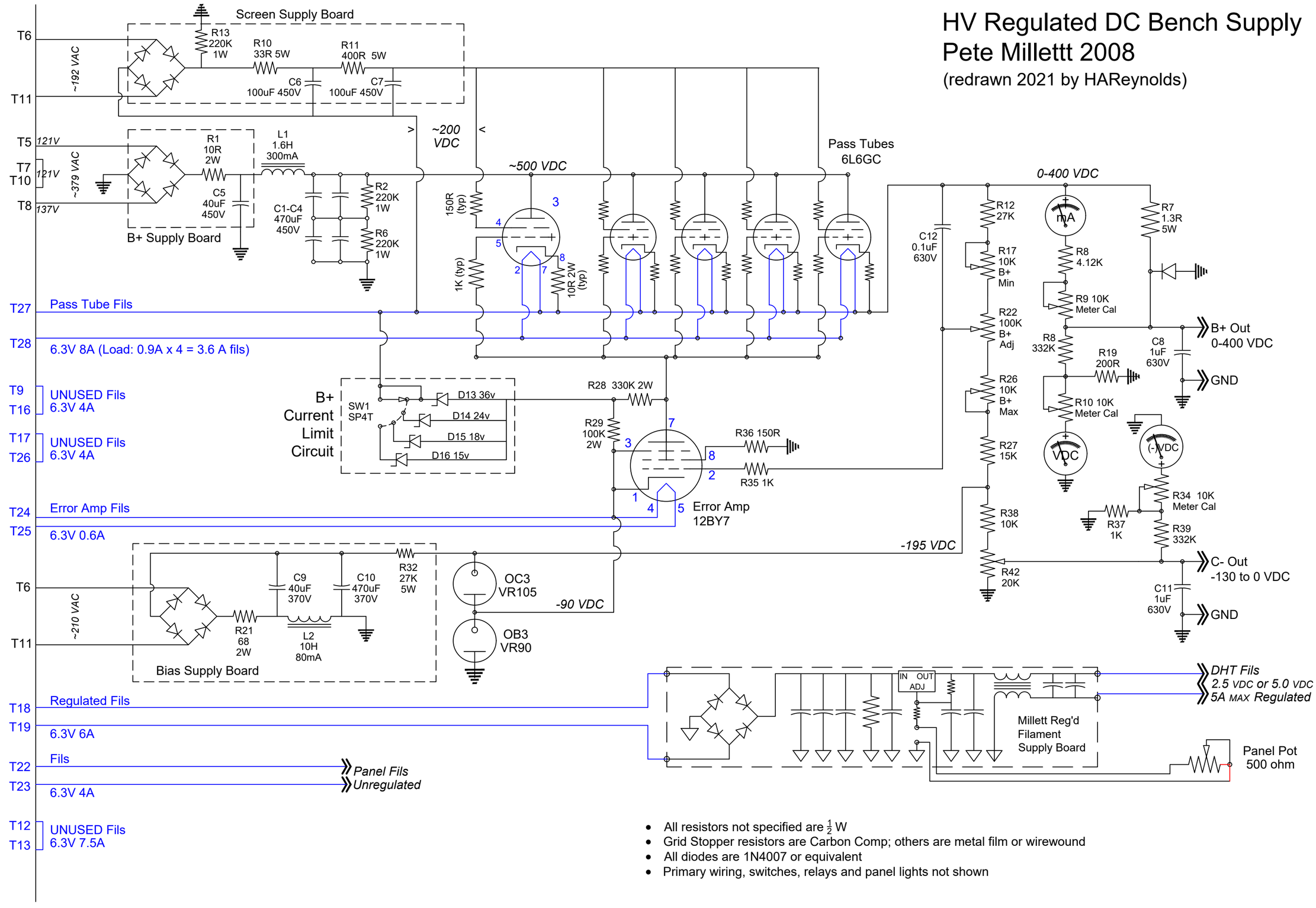

- All resistors not specified are $\frac{1}{2}$ W
- Grid Stopper resistors are Carbon Comp; others are metal film or wirewound
- All diodes are 1N4007 or equivalent
- Primary wiring, switches, relays and panel lights not shown