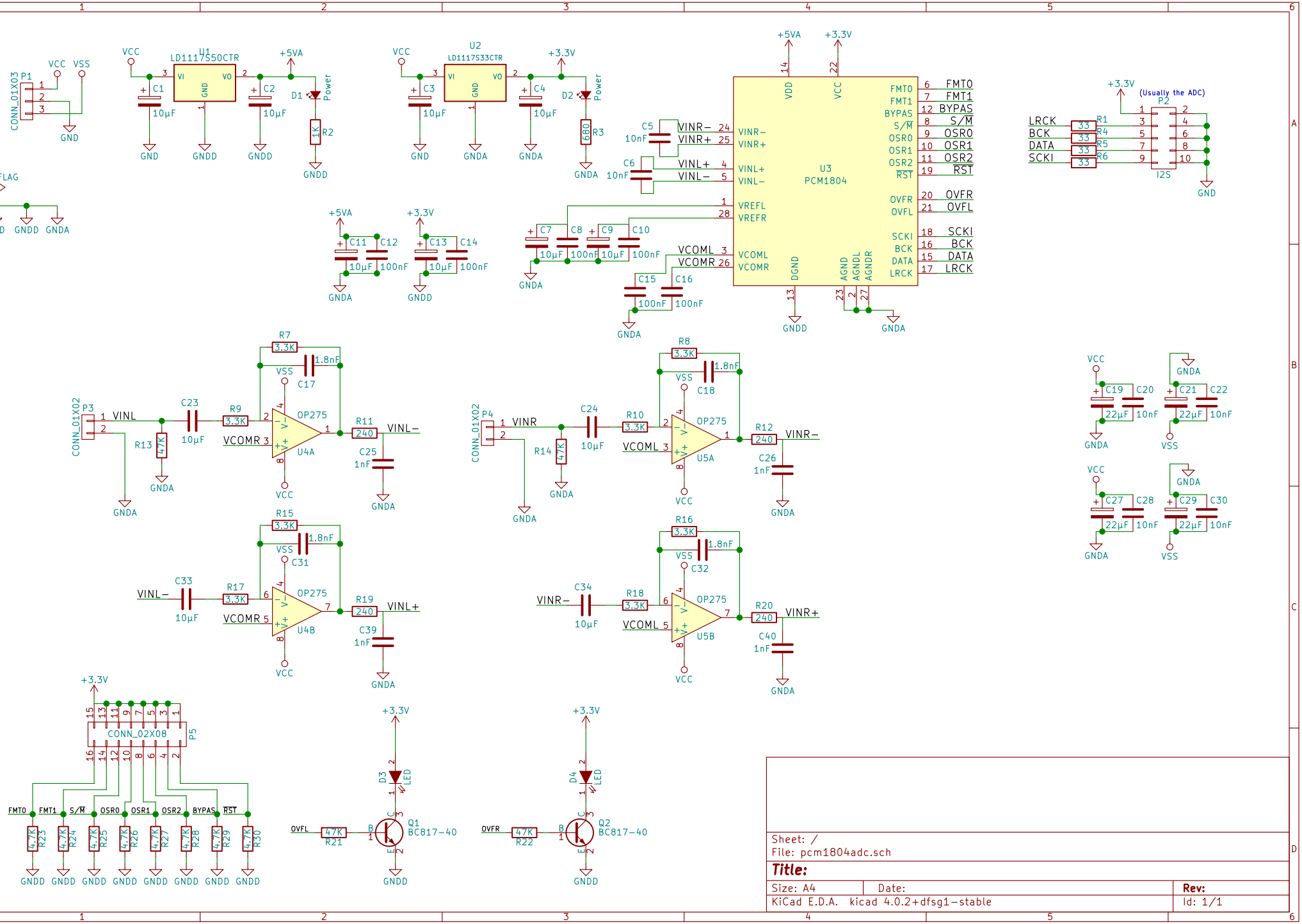
CONN_01X03
P1
VCC
VSS
GND
U1
LD1117S50CTR
VI
VO
GND
C1
10µF
C2
10µF
+5VA
D1
Power
1K
R2
GNDD
U2
LD1117S33CTR
C3
10µF
C4
10µF
+3.3V
D2
Power
680
R3
GNDA
PWR_FLAG
GND
GNDD
GNDA
U3
PCM1804
VDD
VCC
DGND
AGND
AGNDL
AGNDR
VINR−
VINR+
VINL+
VINL−
VREFL
VREFR
VCOML
VCOMR
FMT0
FMT1
BYPAS
S/M
OSR0
OSR1
OSR2
RST
OVFR
OVFL
SCKI
BCK
DATA
LRCK
C5
10nF
C6
10nF
C7
10µF
C8
100nF
C9
10µF
C10
100nF
C11
10µF
C12
100nF
C13
10µF
C14
100nF
C15
100nF
C16
100nF
(Usually the ADC)
P2
I2S
LRCK
BCK
DATA
SCKI
R1
R4
R5
R6
33
P3
CONN_01X02
VINL
R13
47K
C23
10µF
R9
3.3K
VCOMR
OP275
U4A
R7
3.3K
1.8nF
C17
R11
240
VINL−
C25
1nF
P4
VINR
R14
47K
C24
10µF
R10
3.3K
VCOML
U5A
R8
3.3K
1.8nF
C18
R12
240
VINR−
C26
1nF
C19
22µF
C20
10nF
C21
22µF
C22
10nF
C27
22µF
C28
10nF
C29
22µF
C30
10nF
R15
3.3K
1.8nF
C31
C33
10µF
R17
3.3K
U4B
R19
240
VINL+
C39
1nF
R16
3.3K
1.8nF
C32
C34
10µF
R18
3.3K
U5B
R20
240
VINR+
C40
1nF
P5
CONN_02X08
FMT0
FMT1
S/M
OSR0
OSR1
OSR2
BYPAS
RST
R23
R24
R25
R26
R27
R28
R29
R30
4.7K
D3
LED
D4
LED
OVFL
OVFR
47K
R21
R22
Q1
BC817−40
Q2
BC817−40
Sheet: /
File: pcm1804adc.sch
Title:
Size: A4
Date:
Rev:
KiCad E.D.A. kicad 4.0.2+dfsg1−stable
Id: 1/1